This is a digital copy of a book that was preserved for generations on library shelves before it was carefully scanned by Google as part of a project to make the world's books discoverable online.

It has survived long enough for the copyright to expire and the book to enter the public domain. A public domain book is one that was never subject to copyright or whose legal copyright term has expired. Whether a book is in the public domain may vary country to country. Public domain books are our gateways to the past, representing a wealth of history, culture and knowledge that's often difficult to discover.

Marks, notations and other marginalia present in the original volume will appear in this file - a reminder of this book's long journey from the publisher to a library and finally to you.

Usage guidelines

Google is proud to partner with libraries to digitize public domain materials and make them widely accessible. Public domain books belong to the public and we are merely their custodians. Nevertheless, this work is expensive, so in order to keep providing this resource, we have taken steps to prevent abuse by commercial parties, including placing technical restrictions on automated querying.

We also ask that you:

+ *Make non-commercial use of the files* We designed Google Book Search for use by individuals, and we request that you use these files for personal, non-commercial purposes.
+ *Refrain from automated querying* Do not send automated queries of any sort to Google's system: If you are conducting research on machine translation, optical character recognition or other areas where access to a large amount of text is helpful, please contact us. We encourage the use of public domain materials for these purposes and may be able to help.
+ *Maintain attribution* The Google "watermark" you see on each file is essential for informing people about this project and helping them find additional materials through Google Book Search. Please do not remove it.
+ *Keep it legal* Whatever your use, remember that you are responsible for ensuring that what you are doing is legal. Do not assume that just because we believe a book is in the public domain for users in the United States, that the work is also in the public domain for users in other countries. Whether a book is still in copyright varies from country to country, and we can't offer guidance on whether any specific use of any specific book is allowed. Please do not assume that a book's appearance in Google Book Search means it can be used in any manner anywhere in the world. Copyright infringement liability can be quite severe.

About Google Book Search

Google's mission is to organize the world's information and to make it universally accessible and useful. Google Book Search helps readers discover the world's books while helping authors and publishers reach new audiences. You can search through the full text of this book on the web at `http://books.google.com/`

Per. 2333 d. 16
31(2).[illegible]

EXECUTIVE DOCUMENTS

PRINTED BY ORDER OF

THE HOUSE OF REPRESENTATIVES,

DURING THE

THIRD SESSION OF THE THIRTY-SEVENTH CONGRESS.

1862-'63.

IN TWELVE VOLUMES.

Volume 1	Part of No. 1.
Volume 2	Part of No. 1.
Volume 3	Part of No. 1.
Volume 4	Part of No. 1, and Nos. 2 to 21, inclusive.
Volume 5	Nos. 23 to 51, inclusive.
Volume 6	Nos. 53 to 62, inclusive.
Volume 7	Nos. 64 to 77, inclusive.
Volume 8	Nos. 79 to 85, inclusive.
Volume 9	No. 22.
Volume 10	No. 52.
Volume 11	No. 78.
Volume 12	No. 63.

WASHINGTON:
GOVERNMENT PRINTING OFFICE.
1863.

INDEX

TO

THE EXECUTIVE DOCUMENTS

OF THE

HOUSE OF REPRESENTATIVES OF THE UNITED STATES,

OF THE

THIRD SESSION OF THE THIRTY-SEVENTH CONGRESS.

Title.	Vol.	No.	P'ge.
A.			
Adjutant General of the United States. Annual report of the	4	1	41
Adjutant General, transmitting estimates for appropriations for the support of the Adjutant General's department for the year ending June 30, 1864. Letter from the	4	3	146
Africans. Letter from the Secretary of the Interior, transmitting reports from Agent Seys relative to the case of liberated	5	28	
Agricultural fund. Letter from the Commissioner of Patents in relation to the expenditure of the	4	5	
Agriculture and agricultural statistics for the year 1862. Report of the Commissioner of Patents on	11	78	
Agriculture relative to the expenditure of the agricultural fund. Letter from the Commissioner of the Department of	4	14	
Agricultural exhibition at Hamburg. Letter from the President of the United States, transmitting correspondence of the minister of the Hanseatic republics relative to an international	5	31	
Agricultural division of the Patent Office. Letter from the Secretary of the Interior relative to the mission of D. J. Browne to Europe as agent of the	6	53	
Agricultural division of the Patent Office. Letter from the Secretary of the Interior respecting the outstanding liabilities of the	7	66	
Appropriations for the fiscal year ending June 30, 1864. Letter from the Secretary of the Treasury, transmitting estimates for	4	3	13
Appropriations required to complete the service of the year ending June 30, 1863. Letter from the Secretary of the Treasury, transmitting estimates for additional	4	3	3
Appropriations, specific and indefinite, made by former acts of Congress, which may be required for the service of the last three quarters of the fiscal year ending June 30, 1863. Statement of the Register of the Treasury of the estimates for	4	3	12
Aqueduct. Report of the superintendent of the Washington	2	1	612
Architect of the Capitol extension. Report of the	2	1	604
Army from the 23d of July to the 25th of November, 1862. Report of the general-in-chief of the operations of the	4	1	20
Army of the Potomac since June 25, 1862. Preliminary report of the operations of the	4	1	29
Army of the operations of his department during the year ending June 30, 1862. Annual report of the Adjutant General of the	4	1	41
Army of the operations of his department during the year ending June 30, 1862. Annual report of the Paymaster General of the	4	1	42
Army of the operations of his department during the year ending June 30, 1862. Annual report of the Surgeon General of the	4	1	50

Title.	Vol.	No.	P'ge.
Army of the operations of his department during the year ending June 30, 1862. Annual report of the Commissary General of the	4	1	59
Army of the operations of his department during the year ending June 30, 1862. Annual report of the Quartermaster General of the	4	1	60
Army and navy of the United States. Letter from the President of the United States on signing the joint resolution for the immediate payment of the	5	37	
Artillery for the year ending June 30, 1864. Estimates for appropriations for the support of four regiments of	4	3	157
Attorney General relative to the enforcement of the confiscation law in the District of Columbia. Letter from the	5	32	
Auditor of the Treasury for the Post Office Department of the operations of his office during the year ending June 30, 1862. Annual report of the Sixth	4	1	197
B.			
Balances on the books of the Second and Third Auditors. Letter from the Acting Comptroller, transmitting reports of unsettled	8	83	
Banks in the United States. Letter from the Secretary of the Treasury, transmitting annual report on the condition of the	5	25	
Banks in the United States in different years, from 1851 to 1862, inclusive. General view of the condition of the	5	25	201
Bank shares in the city of New York, February, April, July, and October, 1861, and January, 1862. Market values of	5	25	202
Banks in the United States on or about the 1st of January, 1862. Condensed statement of the condition of the	5	25	208
Banks in the United States on or near January 1, 1834–1860. Tabular statement showing the number of banks, the bank capital, bank circulation, deposits, deposits and circulation per capita, specie, bank loans, stocks held by banks, and loans and stocks combined, of the	5	25	210
Board of the Metropolitan Police. Report of the	2		648
Boyce, Peter, Indian farm agent at Corn Creek, Utah Territory. Account of	4	3	82
Brown for running and marking boundary lines between certain Indian tribes. Letter from the Secretary of the Interior, recommending an appropriation to pay Messrs. Jones and	6	62	
C.			
California. Annual report of the surveyor general for the district of	2		133
California for the year ending June 30, 1864. Letter from the superintendent of Indian affairs, transmitting estimates for the support of the Indian agency in the northern district of	4	3	86
California for the year ending June 30, 1864. Letter from the superintendent of Indian affairs, transmitting estimates for the support of the Indian agency in the southern district of	4	3	87
Capitol extension. Report of the architect of the	2	1	604
Cavalry for the year ending June 30, 1864. Estimates for appropriations for the support of six regiments of	4	3	155
Clerks and other persons employed in the Department of the Interior, and the amount received by each. List of	7	69	
Clerks employed in the Treasury Department, with the compensation paid to each. List of	7	70	
Coast Survey, transmitting estimates for the survey of the coast during the year ending June 30, 1864. Letter from the Superintendent of the	4	3	57
Coast Survey, showing the progress of the survey during the year 1862. Report of the Superintendent of the	9	22	
Collector and other revenue officers at New York under the 5th section of the act of May 20, 1862. Letter from the Secretary of the Treasury relative to money received by the	6	60	
Colorado and Utah. Annual report of the surveyor general for the district of	2	1	112
Commercial relations of the United States with foreign countries for the year ending September 30, 1862. Letter from the Secretary of State, transmitting a report on the	12	63	
Commissioner of the General Land Office. Annual report of the	2		29
Commissioner of the General Land Office for the year ending June 30, 1864. Estimate for appropriations required for the support of the office of the	2	1	74

Title.	Vol.	No.	P'ge.
Commissioner of the General Land Office for the year ending June 30, 1864. Estimate for appropriations required to meet the contingent expenses of the office of the	2	1	75
Commissioner of the General Land Office, transmitting estimates for appropriations for the support of the office for the year ending June 30, 1864. Letter from the	4	3	89
Commissary General of the United States. Annual report of the	4	1	59
Commissary General, transmitting estimates for appropriations for the support of the Commissary General's department for the year ending June 30, 1864. Letter from the Acting	4	3	164
Commissioner of Public Buildings. Annual report of the	2	1	596
Commissioner of Public Buildings, from November 1, 1861, to June 30, 1862. Statement of the receipts and expenditures under the direction of the	2	1	603
Commissioner of Public Buildings, transmitting estimates for the year ending June 30, 1864. Letter from the	4	3	96
Commissioner of Pensions, transmitting estimates for the support of the Pension Office for the year ending June 30, 1864. Letter from the	4	3	108
Commissioner of Indian Affairs, with reference to the payment of the claim of White Crow. Letter from the	4	3	81
Commissioner of Indian Affairs, transmitting estimates for the support of the office of Indian Affairs for the year ending June 30, 1864. Letter from the	4	3	114
Commissioner of Patents, transmitting annual estimates for the year ending June 30, 1864. Letter from the	4	3	102
Comptroller, transmitting reports of Second and Third Auditors of unsettled balances on their books. Letter from the Acting	8	83	
Confiscation law in the District of Columbia. Letter from the Attorney General relative to the enforcement of the	5	32	
Construction and Repair, of the navy, for the year ending June 30, 1864. Estimates for appropriation for the support of the Bureau of	4	3	225
Contingent expenses of the office of the Commissioner of the General Land Office for the year ending June 30, 1864. Estimate for appropriation required to meet the	2	1	75
Contingent fund of the Treasury Department for the year ending June 30, 1862. Letter from the Secretary of the Treasury, transmitting statement of the expenditure of the	4	12	
Contingent fund of the State Department. Letter from the Secretary of State relative to the expenditure of the	5	42	
Contingent expenses of the Department of the Interior for the year ending June 30, 1862. Letter from the Secretary of the Interior, transmitting a statement of the	7	76	
Contingent expenses of the military establishment for the year ending June 30, 1862. Letter from the Secretary of War, transmitting a statement of the	8	84	
Contractors for the year ending June 30, 1862. Letter from the Postmaster General, reporting fines and deductions from the pay of	6	59	
Correspondence of the State Department upon foreign affairs	1	1	
Counterfeiting bank notes. Extracts from the annual reports of the board of managers of the associated banks in New England for the suppression of	5	25	203
D.			
Dakota Territory. Annual report of the surveyor general of	2	1	91
Dakota Territory. Letter from the Secretary of the Interior, stating the necessity for appropriations for	5	36	
Deaf, Dumb, and Blind. Report of the president of the Columbia Institution for the	2	1	629
E.			
Emigrants from Fort Abercrombie to Fort Benton, &c. Letter from the Secretary of War, transmitting the report of Captain J. L. Fisk of the expedition to escort	8	80	
Engineer corps of the army for the year ending June 30, 1864. Estimates of appropriations for the support of the	4	3	152
Engineer department for fortifications for the year ending June 30, 1864. Estimates for appropriations required for the support of the	4	3	191

Title.	Vol.	No.	P'ge.
Equipment and Recruiting, of the navy, for the year ending June 30, 1864. Estimates for appropriations for the support of the Bureau of	4	3	216
Estimates for appropriations required for the support of the office of Commissioner of the General Land Office for the year ending June 30, 1864	2	1	74
Estimates for appropriations required to meet the contingent expenses of the office of the Commissioner of the General Land Office for the year ending June 30, 1864	2	1	75
Estimates for appropriations for the surveying department of the General Land Office for the year ending June 30, 1864	2	1	76
Estimates for appropriations required for surveying the public lands for the year ending June 30, 1864	2	1	79
Estimates for appropriations for the surveying department of the General Land Office to supply deficiency for the next six months of the year ending June 30, 1864	2	1	80
Estimates for additional appropriations required to complete the service of the fiscal year ending June 30, 1863	4	3	4
Estimates in detail of additional appropriations required for the service of the War Department for the year ending June 30, 1863	4	3	7
Estimates for permanent appropriations, specific and indefinite, made by former acts of Congress, which may be required for the service of the last three quarters of the year ending June 30, 1863	4	3	12
Estimates for appropriations for per diem and mileage of senators, and for the support of the office of the Secretary of the Senate for the year ending June 30, 1864	4	3	15
Estimates for appropriations for per diem and mileage of members, and for the support of the office of the Clerk of the House of Representatives for the year ending June 30, 1864	4	3	15
Estimates for appropriations for the support of the office of Superintendent of Public Printing for the year ending June 30, 1864	4	3	16
Estimates for appropriations for the support of the Court of Claims for the year ending June 30, 1864	4	3	16
Estimates for appropriations for the support of the Executive during the year ending June 30, 1864	4	3	17
Estimates for appropriations for the support of the Department of State for the year ending June 30, 1864	4	3	17
Estimates for appropriations for the support of the Treasury Department for the year ending June 30, 1864	4	3	18
Estimates for appropriations for the support of the Department of the Interior for the year ending June 30, 1864	4	3	22
Estimates for appropriations for the support of the War Department for the year ending June 30, 1864	4	3	25
Estimates for appropriations for the support of the Navy Department for the year ending June 30, 1864	4	3	28
Estimates for appropriations for the support of the Post Office Department for the year ending June 30, 1864	4	3	30
Estimates for appropriations for the support of the Department of Agriculture for the year ending June 30, 1864	4	3	31
Estimates for appropriations for the support of the mint of the United States and the assay office in New York for the year ending June 30, 1864	4	3	31
Estimates for appropriations for the support of the governments of the Territories for the year ending June 30, 1864	4	3	32
Estimates for appropriations for the support of the judiciary for the year ending June 30, 1864	4	3	33
Estimates for appropriations for the support of intercourse with foreign nations for the year ending June 30, 1864	4	3	34
Estimates for appropriations for the support of the independent treasury for the year ending June 30, 1864	4	3	35
Estimates for appropriations for the continuation of the survey of the coast of the United States for the year ending June 30, 1864	4	3	36
Estimates for appropriations for the support of the light-house establishment for the year ending June 30, 1864	4	3	36
Estimates for appropriations for surveyor generals' offices for the year ending June 30, 1864	4	3	38
Estimates for appropriations for the support of the government hospital for the insane for the year ending June 30, 1864	4	3	38

Title.	Vol.	No.	P'ge.
Estimates for appropriations for the preservation of the collections of the exploring and surveying expeditions of the government for the year ending June 30, 1864	4	3	38
Estimates for appropriations for the support of public buildings and grounds for the year ending June 30, 1864	4	3	38
Estimates for appropriations for the support of the Metropolitan Police for the year ending June 30, 1864	4	3	40
Estimates for appropriations for the support of the Columbia Institution for the Deaf, Dumb, and Blind, for the year ending June 30, 1864	4	3	40
Estimates for appropriations for sundry expenses in the Patent Office during the year ending June 30, 1864	4	3	40
Estimates for appropriations for surveying the public lands during the year ending June 30, 1864	4	3	40
Estimates for appropriations for the payment of pensions during the year ending June 30, 1864	4	3	40
Estimates for appropriations for the support of the Indian department during the year ending June 30, 1864	4	3	41
Estimates for appropriations for the support of the army for the year ending June 30, 1864	4	3	44
Estimates for appropriations for the support of the armory, arsenals, and providing munitions of war for the year ending June 30, 1864	4	3	44
Estimates for appropriations for the support of the Military Academy for the year ending June 30, 1864	4	3	44
Estimates for appropriations for repairs and for the preservation and construction of fortifications for the year ending June 30, 1864	4	3	44
Estimates for appropriations for the support of the navy for the year ending June 30, 1864	4	3	45
Estimates for appropriations for the support of the marine corps for the year ending June 30, 1864	4	3	45
Estimates for appropriations for the support of navy yards for the year ending June 30, 1864	4	3	46
Estimates for appropriations for the support of marine hospitals for the year ending June 30, 1864	4	3	46
Estimates for appropriations for the support of naval magazines for the year ending June 30, 1864	4	3	46
Estimates for appropriations for the pay of superintendents in the navy, for the support of the Naval Academy and Naval Observatory, and the publication of the Nautical Almanac, for the year ending June 30, 1864	4	3	46
Estimates for permanent appropriations, specific and indefinite, agreeably to former acts of Congress, for the service of the year ending June 30, 1864	4	3	48
Estimates for balances and amounts which may be carried to the surplus fund, stated in pursuance of the eighth section of the act of May 1, 1820	4	3	49
Estimates for appropriations for the support of the Interior Department for the year ending June 30, 1864	4	3	53
Estimates for appropriations for the support of the government printing establishment for the year ending June 30, 1864	4	3	53
Estimates for appropriations for the continuance of the survey of the coast for the year ending June 30, 1864. Letter from the superintendent, transmitting	4	3	57
Estimates for appropriations for the support of the light-house establishment for the year ending June 30, 1864. Letter from the chairman of the board, transmitting	4	3	65
Estimates of the expenses of the Indian agency in Nevada Territory for the year ending June 30, 1864	4	3	76
Estimates of goods and other expenses for the support of the Indian agency in Utah Territory for the year ending June 30, 1862	4	3	78
Estimates of the superintendent of Indian affairs of the expenses of the Indian agency in the northern district of California for the year ending June 30, 1864	4	3	86
Estimates of the superintendent of Indian affairs of the expenses of the Indian agency in the southern district of California for the year ending June 30, 1864	4	3	87
Estimates for appropriations for the support of the General Land Office for the year ending June 30, 1864. Letter from the Commissioner, transmitting	4	3	89

Title.	Vol.	No.	P'ge.
Estimates for the support of the public buildings and grounds for the year ending June 30, 1864. Letter from the Commissioner, transmitting	4	3	96
Estimates for the support of the Patent Office for the year ending June 30, 1864. Letter from the Commissioner, transmitting	4	3	102
Estimates for the support of the Columbia Institution for the Deaf, Dumb, and Blind. Letter from the superintendent, transmitting	4	3	107
Estimates for the support of the government hospital for the insane. Letter from the superintendent, transmitting	4	3	106
Estimates for appropriations for the preservation of the collections of the exploring and surveying expeditions of the government. Letter from the secretary of the Smithsonian Institution, transmitting	4	3	107
Estimates for appropriations for the support of the Pension Office for the year ending June 30, 1864. Letter from the Commissioner, transmitting	4	3	108
Estimates for appropriations for the support of the Metropolitan Police for the year ending June 30, 1864. Letter from the treasurer of the Metropolitan Police, transmitting	4	3	108
Estimates for appropriations for the support of the Indian department, for fulfilling treaties, and for general incidental expenses, for the year ending June 30, 1864. Letter from the Commissioner, transmitting	4	3	114
Estimates for appropriations for the support of the War Department for the year ending June 30, 1864. Letter from the Secretary of War, transmitting	4	3	146
Estimates for appropriations for the support of the Adjutant General's department for the year ending June 30, 1864. Letter from the Adjutant General, transmitting	4	3	147
Estimates for appropriations for the pay and support of the army for the year ending June 30, 1864	4	3	148
Estimates for appropriations for the support of the general and staff officers of the army for the year ending June 30, 1864	4	3	148
Estimates for appropriations for the support of the engineer corps of the army for the year ending June 30, 1864	4	3	152
Estimates for appropriations for the support of the corps of topographical engineers for the year ending June 30, 1864	4	3	153
Estimates for appropriations for the support of the Ordnance department for the year ending June 30, 1864	4	3	154
Estimates for appropriations for the support of six regiments of cavalry for the year ending June 30, 1864	4	3	155
Estimates for appropriations for the support of four regiments of artillery for the year ending June 30, 1864	4	3	157
Estimates for appropriations for the support of nineteen regiments of infantry for the year ending June 30, 1864	4	3	159
Estimates for appropriations for the pay of the Military Academy, subsistence of officers, and allowances, for the year ending June 30, 1864	4	3	161
Estimates for appropriations for the pay of volunteers in the United States service for the year ending June 30, 1864	4	3	163
Estimates for appropriations for the support of the Commissary General's department for the year ending June 30, 1864	4	3	165
Estimates for appropriations for the support of the Quartermaster General's department for the year ending June 30, 1864. Letter from the Quartermaster General, transmitting	4	3	167
Estimates for appropriations for the support of the medical and hospital department of the army for the year ending June 30, 1864	4	3	183
Estimates for appropriations required for the ordnance service for the year ending June 30, 1864	4	3	184
Estimates for appropriations required by the engineer department for the support of the Military Academy for the year ending June 30, 1864	4	3	187
Estimates for appropriations for the current and ordinary expenses of the Military Academy for the year ending June 30, 1864	4	3	188
Estimates for appropriations required for the support of the engineer department for fortifications for the year ending June 30, 1864	4	3	191
Estimates for appropriations required for the service of the Bureau of Topographical Engineers for the year ending June 30, 1864	4	3	194
Estimate for appropriations for the support of the Navy Department for the year ending June 30, 1864	4	3	195
Estimates for appropriations for the support of the Naval Academy for the year ending June 30, 1864	4	3	197

Title.	Vol.	No.	P'ge.
Estimates for appropriations for the support of the Bureau of Yards and Docks, of the navy, for the year ending June 30, 1864	4	3	200
Estimates for appropriations for the support of the Bureau of Equipment and Recruiting, of the navy, for the year ending June 30, 1864	4	3	216
Estimates for appropriations for the support of the Bureau of Navigation, in the navy, for the year ending June 30, 1864	4	3	219
Estimates for appropriations for the support of the Naval Observatory for the year ending June 30, 1864	4	3	219
Estimates for appropriations for the support of the Nautical Almanac for the year ending June 30, 1864	4	3	220
Estimates for appropriations for the support of the Bureau of Ordnance, of the navy, for the year ending June 30, 1864	4	3	221
Estimates for appropriations for the support of the Bureau of Construction and Repair, of the navy, for the year ending June 30, 1864	4	3	225
Estimates for appropriations for the support of the Bureau of Steam Engineering, of the navy, for the year ending June 30, 1864	4	3	227
Estimate for appropriations for the support of the Bureau of Provisions and Clothing, in the navy, for the year ending June 30, 1864	4	3	229
Estimates for appropriations for the support of the Bureau of Medicine and Surgery, in the navy, for the year ending June 30, 1864	4	3	231
Estimates for appropriations for the support of the Marine Corps for the year ending June 30, 1864	4	3	233
Estimates for appropriations for postal service for the year ending June 30, 1864. Letter from the Postmaster General, transmitting	4	13	
Estimates for appropriations for the Capitol extension and new dome	5	35	
F.			
Fines and deductions from the pay of contractors for the year ending June 30, 1862. Letter from the Postmaster General reporting	6	59	
Fisk, J. L., Captain, of the expedition to escort emigrants from Fort Abercrombie to Fort Benton, &c. Letter from the Secretary of War, transmitting the report of	8	80	
Foreign Affairs. Papers relating to	1	1	25
Fortifications for the year ending June 30, 1864. Estimates for appropriations required for the support of the engineer department for	4	3	191
G.			
General and staff officers of the army for the year ending June 30, 1864. Estimates for appropriations for the support of the	4	3	148
Generals who are not assigned to command. Letter from the Secretary of War relative to	5	46	
Generals not assigned to actual command. Letter from the Secretary of War, reporting the names, number, &c., of brigadier and major	7	65	
H.			
Heads of departments in case of death, absence, or sickness. Letter from the President of the United States in relation to the temporary appointment of	5	24	
Hutchinson, John, for damages sustained at the hands of government. Letter from the Secretary of War relative to the claim of	6	58	
I.			
Indian Affairs. Annual report of the Commissioner of	2	1	169
Papers and documents accompanying the above report.			
NORTHERN SUPERINTENDENCY.			
No. 1. Report of C. W. Thompson, superintendent	2	1	199
No. 2. History of the Indian war in Minnesota, by Lieutenant Governor Donnelly	2	1	203

Title.	Vol.	No.	P'ge.
No. 3. Letter of the Acting Commissioner to the Commissioner relative to paying the Sioux annuities in coin	2	1	212
No. 4. Letter of the Commissioner to the Secretary of the Interior, protesting against the hanging of the three hundred Sioux, under sentence of death in Minnesota	2	1	213
No. 5. Report of A. C. Morrill, special agent for the Chippewas	2	1	214
No. 6. Correspondence between the Commissioner and others, while in Minnesota, relative to troubles among the Chippewas	2	1	221
No. 7. Letter from Acting Secretary of State, transmitting copy of one from the United States consul general at Montreal respecting the Indian trouble upon the northwestern frontier	2	1	231
No. 8. Report of L. E. Webb, agent for the Chippewas of Lake Superior	2	1	232
No. 9. Report of St. A. D. Balcombe, agent for the Winnebagoes	2	1	236
CENTRAL SUPERINTENDENCY.			
No. 10. Report of H. B. Branch, superintendent	2	1	240
No. 11. Report of F. Johnson, agent for the Delawares	2	1	243
No. 12. Report of O. H. Irish, agent for the Omahas	2	1	246
No. 13. Report of Reverend R. I. Burtt, missionary for the Omahas	2	1	249
No. 14. Report of C. C. Hutchinson, agent for the Sacs and Foxes	2	1	250
No. 15. Report of J. B. Abbott, agent for the Shawnees	2	1	254
No. 16. Report of C. B. Keith, agent for the Kickapoos	2	1	259
No. 17. Report of G. A. Colton, agent for the Osage River Indians	2	1	260
No. 18. Report of W. W. Ross, agent for the Pottawatomies	2	1	262
No. 19. Report of B. F. Lushbaugh, agent for the Pawnees	2	1	266
No. 20. Report of John P. Baker, agent for the Ottoes and Missourias	2	1	269
No. 21. Report of John Loree, agent at the Upper Platte agency	2	1	274
No. 22. Report of H. W. Farnsworth, of Kansas agency	2	1	276
No. 23. Report of John A. Burbank, agent at the Great Nemaha agency	2	1	277
SOUTHERN SUPERINTENDENCY.			
No. 24. Report of Wm. G. Coffin, superintendent	2	1	279
No. 25. Report of G. A. Cutler, agent for the Creeks	2	1	282
No. 26. Report of Isaac Coleman, agent for the Choctaws and Chickasaws	2	1	284
No. 27. Report of G. C. Snow, agent for the Seminoles	2	1	286
No. 28. Report of P. P. Elder, agent at the Neosho agency	2	1	287
No. 29. Report of Superintendent Coffin relative to refugee Indians	2	1	289
No. 30. Report of the Commissioner, in answer to a resolution of the House of Representatives of May 28, 1862, relative to refugee Indians	2	1	291
No. 31. Reports of Agents Carruth and Martin relative to the refugee Indians	2	1	302
No. 32. Letter of Superintendent Coffin relative to making new treaties with the various Indian tribes	2	1	311
No. 32½. Letters of Superintendent Coffin relative to correspondence with refugee Indians	2	1	313
No. 33. Instructions to Baptiste Peoria for ascertaining the loyalty or disloyalty of the Indians of Western Missouri and Arkansas	2	1	315
No. 34. Report of Baptiste Peoria under above instructions	2	1	316
DAKOTA SUPERINTENDENCY.			
No. 35. Report of Wm. Jayne, governor and *ex officio* superintendent	2	1	319
No. 36. Report of Henry W. Reed, agent for the Blackfeet	2	1	322
No. 37. Report of John B. Hoffman, agent for the Poncas	2	1	325
No. 38. Report of Samuel N. Latta, agent at Upper Missouri	2	1	336
UTAH SUPERINTENDENCY.			
No. 39. Report of James Duane Doty, superintendent	2	1	342
No. 40. Report of Luther Mann, jr., agent	2	1	348
No. 41. Report of F. W. Hatch, agent at Spanish Fork reservation	2	1	349
No. 42. Letter of Superintendent Doty relative to danger from Indians	2	1	354
No. 43. Despatch from Benjamin Holliday to the Postmaster General relative to danger to the mail in crossing the plains	2	1	358
No. 44. Letter of Reverend P. J. De Smet relative to the same subject	2	1	358

Title.	Vol.	No.	P'ge.
No. 45. Notice to persons contemplating crossing the plains of danger from the Indians	2	1	359
NEVADA SUPERINTENDENCY.			
No. 46. Report of James W. Nye, governor and *ex officio* superintendent	2	1	359
No. 47. Report of same relative to difficulties with the Indians of Owen's river	2	1	366
COLORADO SUPERINTENDENCY.			
No. 48. Report of John Evans, governor and *ex officio* superintendent	2	1	373
No. 49. Report of H. M. Vaile on his expedition from Denver, Colorado, to Great Salt Lake City, and back	2	1	376
NEW MEXICO SUPERINTENDENCY.			
No. 50. Report of James L. Collins, superintendent	2	1	382
No. 51. Report of W. F. M. Arny, agent	2	1	386
No. 52. Report of José A. Manzanaries, agent	2	1	390
No. 53. Report of Lorenzo Labadi, agent	2	1	391
No. 54. Report of correspondence relative to furnishing Indians in New Mexico with provisions	2	1	393
OREGON SUPERINTENDENCY.			
No. 55. Report of William H. Rector, superintendent	2	1	397
No. 56. Report of William H. Barnhart, agent at Umatilla agency	2	1	412
No. 57. Report of B. R. Riddle, agent at Siletz agency	2	1	416
No. 58. Report of James B. Condon, agent at Grand Ronde agency	2	1	427
No. 59. Report of William Logan, agent at Warm Spring reservation	2	1	432
No. 60. Report of Linus Brooks, special agent at Alseya sub-agency	2	1	441
WASHINGTON SUPERINTENDENCY.			
No. 61. Report of B. F. Kendall, late superintendent	2	1	444
CALIFORNIA SUPERINTENDENCY.			
No. 62. Report of George N. Hanson, superintending agent for northern district	2	1	452
No. 63. Report of same relative to loss of Klamath reservation	2	1	457
No. 64. Report of same of March 31, 1862	2	1	463
No. 65. Report of same relative to his visit to different reservations	2	1	464
No. 66. Report of same relative to reducing the number of Indian reservations	2	1	466
No. 67. Report of John P. H. Wentworth, superintending agent for the southern district	2	1	468
GREEN BAY AGENCY.			
No. 68. Report of Moses M. Davis, agent	2	1	472
MACKINAC AGENCY.			
No. 69. Report of D. C. Leach, agent	2	1	486
NEW YORK AGENCY.			
No. 70. Report of D. E. Sill, agent	2	1	489
MISCELLANEOUS.			
No. 71. Memorial of S. C. Pomeroy for the removal of Indians from Kansas	2	1	491
No. 72. Report of the Commissioner to the Secretary of the Interior relative to the memorial of the honorable S. C. Pomeroy	2	1	493

Title.	Vol.	No.	P'ge.
No. 73. Letter of the Commissioner to the Secretary of the Interior relative to raising a brigade of loyal Indians in Kansas	2	1	494
No. 74. Statement showing the schools, population, and wealth of the different Indian tribes which are in direct connexion with the government of the United States	2	1	496
INDIAN TRUST FUND.			
No. 75. Report of Elisha Goddard on trust fund	2	1	507
No. 76. Statement of Indian trust fund No. 1	2	1	508
No. 77. Statement of Indian trust fund No. 2	2	1	510
No. 78. Statement of Indian trust fund No. 3	2	1	512
A 1.—Letter of P. Chouteau, jr., & Co., to Commissioner, relative to troubles in the northwest	2	1	515
A 2.—Message of chiefs of Uncpapa band of Sioux to their agent, accompanying the above	2	1	516
A 3.—Letter of Charles Primeau to P. Chouteau, jr., & Co., also accompanying the above	2	1	517
B.—Letter of Sergeant W. G. Stewart to Governor Ramsey relative to captives in the hands of the Sioux	2	1	519
C.—Letter of Agent W. A. Burleigh to Commissioner on same subject	2	1	520
D.—Letter of James McFetridge to Hon. H. M. Rice relating to the Sioux. Indorsed by Mr. Rice	2	1	520
E 1.—Letter of P. Chouteau, jr., & Co., to Commissioner, on same subject	2	1	523
E 2.—Letter of Charles Primeau to P. Chouteau, jr., & Co., accompanying the above	2	1	523
F.—Report of W. A. Burleigh, agent for the Yancton Sioux	2	1	524
G 1.—Report of C. H. Hale, superintendent of Indian affairs in Washington Territory	2	1	528
G 2.—Report of S. D. Howe, agent	2	1	545
G 3.—Report of E. C. Chirouse, teacher	2	1	549
G 4.—Report of H. A. Webster, agent	2	1	551
G 5.—Report of J. G. Swan, teacher	2	1	557
G 6.—Report of G. A. Paige, agent	2	1	558
G 7.—Report of W. L. Hays, farmer	2	1	562
G 8.—Report of A. A. Bancroft, agent	2	1	563
G 9.—Report of J. H. Wilbur, teacher	2	1	565
G 10.—Report of C. Hutchins, agent	2	1	566
G 11.—Articles of agreement with Noz Percés	2	1	574
G 12.—Letter of Hon. Gilmer Hays to Superientendent Hale	2	1	575
Indians. Letter from the Secretary of the Interior relative to the payment of annuities to the Miami tribe of	4	18	
Indians in the State of Michigan. Letter from the Secretary of the Interior, transmitting reports of amounts due to the Chippewa, Ottawa, and other tribes of	4	19	
Indians. Letter from the Secretary of the Interior, asking an appropriation for the support of the Utah and other	5	30	
Indians in Kansas. Letter from the Secretary of the Interior, asking an appropriation for certain Ottawa	5	34	
Indian affairs for the southern superintendency. Letter from the Secretary of the Interior relative to the accounts of the superintendent of	5	47	
Indian reservations in California. Letter from the Secretary of the Interior, transmitting a bill for the sale of	5	49	
Indian reservations in California, &c. Letter from the Secretary of the Interior relative to the survey and sale of certain	5	51	
Indian service in the northern district of California. Letter from the Secretary of the Interior, submitting additional estimates for the	5	50	
Indians of Dakota Territory. Letter from the Secretary of the Interior, recommending an appropriation for the loss of goods in transitu for the Yancton Sioux	6	56	
Indians. Letter from the Secretary of the Interior, transmitting information relative to the Stockbridge and Munsee	6	61	
Indian tribes in the northwest. Letter from the President of the United States respecting the cause of the recent outbreaks of the	7	68	

Title.	Vol.	No.	Page.
Indian agents in Nevada and Utah Territories. Letter from the Secretary of the Interior, recommending an increase in the salaries of certain	7	74	
Indian affairs of the southern superintendency. Letter from the Secretary of the Interior, transmitting the accounts of the superintendent of	7	75	
Infantry for the year ending June 30, 1864. Estimates for appropriations for the support of nineteen regiments of	4	3	159
Iowa. Annual report of the surveyor general for the district of Wisconsin and	2	1	80
Insane. Annual report of the board of visitors and superintendent of construction of the government hospital for the	2	1	618
Interior. Annual report of the Secretary of the	2	1	3
Interior relative to the payment of the annuities of the Miami tribe of Indians. Letter from the Secretary of the	4	18	
Interior, transmitting reports of the amounts due to the Chippewa, Ottawa, and other tribes of Indians in the State of Michigan. Letter from the Secretary of the	4	19	
Interior, transmitting a statement of the balances on the books of the Second Comptroller to the credit of the Department of the Interior. Letter from the Secretary of the	4	20	
Interior, transmitting estimates of the department for the year ending June 30, 1864. Letter from the Secretary of the	4	3	53
Interior relative to the mineral resources of Nevada Territory. Letter from the Acting Secretary of the	5	26	
Interior, transmitting reports from Agent Seys relative to the care of liberated Africans. Letter from the Secretary of the	5	28	
Interior, asking an appropriation for the support of Utah and other Indians. Letter from the Secretary of the	5	30	
Interior, asking an appropriation for certain Ottawa Indians in Kansas. Letter from the Secretary of the	5	34	
Interior, transmitting estimates for the Capitol extension and new dome. Letter from the Secretary of the	5	35	
Interior relating to the necessity for appropriations for Dakota Territory. Letter from the Secretary of the	5	36	
Interior relative to establishing a Bureau of Statistics in connexion with the Department of the Interior. Letter from the Secretary of the	5	38	
Interior, recommending certain unexpended balances for Indian service to be otherwise applied. Letter from the Secretary of the	5	39	
Interior, showing the receipts and disbursements, and names of persons employed in the Patent Office up to January 1, 1863. Letter from the Secretary of the	5	43	
Interior relative to the accounts of the superintendent of Indian affairs for the southern superintendency. Letter from the Secretary of the	5	47	
Interior, transmitting a prepared bill for the sale of the Indian reservations in California. Letter from the Secretary of the	5	49	
Interior, transmitting additional estimates for the Indian service in the northern district of California. Letter from the Secretary of the	5	50	
Interior relative to the survey and sale of certain Indian reservations in California, &c. Letter from the Secretary of the	5	51	
Interior relative to the mission of D. J. Browne to Europe, as agent of the agricultural division of the Patent Office. Letter from the Secretary of the	6	53	
Interior, recommending an increase of appropriations for the survey of the public lands in Kansas. Letter from the Secretary of the	6	55	
Interior, recommending an appropriation for loss of goods in transitu for the Yancton Sioux Indians of Dakota Territory. Letter from the Secretary of the	6	56	
Interior, transmitting information relative to the condition of the Stockbridge and Munsee Indians. Letter from the Secretary of the	6	61	
Interior, recommending an appropriation to pay Messrs. Jones and Brown for running and marking boundary lines between certain Indian tribes. Letter from the Secretary of the	6	62	
Interior respecting the outstanding liabilities of the agricultural division of the Patent Office. Letter from the Secretary of the	7	66	
Interior, transmitting a list of clerks and other persons employed in the Department of the Interior, and the amount received by each. Letter from the Secretary of the	7	69	

Title.	Vol.	No.	P'ge.
Interior, recommending an increase in the salaries of certain Indian agents in Nevada and Utah Territories. Letter from the Secretary of the	7	74	
Interior, transmitting the accounts of the superintendent of Indian affairs of the southern superintendency. Letter from the Secretary of the	7	75	
Interior, transmitting a statement of contingent expenses for the year ending June 30, 1862. Letter from the Secretary of the	7	76	
Interior relative to the reduction of expenses of the Department of the Interior. Letter from the Secretary of the	8	85	
J.			
Jones and Brown, for running and marking boundary lines between certain Indian tribes. Letter from the Secretary of the Interior, recommending an appropriation for the pay of	6	62	
Jules et Marie. Message from the President of the United States in relation to the collision between the United States war-steamer San Jacinto and the French brig	4	4	
K.			
Kansas and Nebraska. Annual report of the surveyor general for the district of	2	1	96
L.			
Land Office. Annual report of the Commissioner of the General	2	1	29
Papers accompanying the above.			
1. Statement of surveying operations from July 1, 1861, to September 30, 1862	2	1	56
2. Sales and other disposals of lands during the five quarters ending September 30, 1862	2	1	57
3. Swamp land table, exhibiting the quantity of lands selected under the acts of 1849 and 1850 to September 30, 1862	2	1	58
4. Like table, exhibiting the quantity of land approved under same acts up to same date	2	1	59
5. Table showing the quantity of land patented to the several States under the swamp land act of September 28, 1850	2	1	60
6. Condition of bounty land business under acts of 1847, 1850, 1852, and 1855	2	1	61
7 and 8. Statements of sales of public lands during the first and last halves of the fiscal year ending June 30, 1862	2	1	62
9. Estimates of appropriations for salaries and contingent expenses of General Land Office during fiscal year ending June 30, 1864	2	1	74
10. Estimates of appropriations for the surveying department	2	1	76
11. Like estimate for surveying public lands	2	1	79
12. Estimate to supply deficiency during the year ending June 30, 1863	2	1	80
14. Reports of surveyors general and accompanying maps, (A to J inclusive)	2	1	80
Land Office for the year ending June 30, 1864. Letter from the Commissioner, transmitting estimates for the support of the General	4	3	89
Lands in Kansas. Letter from the Secretary of the Interior, recommending an increase of appropriations for the survey of the public	6	55	
Library of Congress. Message from the President of the United States relative to publications presented by the British Museum to the	4	15	
Light-house Board, transmitting estimates for the support of the light-house establishment for the year ending June 30, 1864. Letter from the chairman of the	4	3	65
Loan created in 1841, &c. Letter from the Secretary of the Treasury relative to the United States	5	27	
M.			
Mails between Washington city and New York. Letter from the Postmaster General relative to the cost of transporting the	5	41	

Title.	Vol.	No.	P'ge.
Marine corps, for the year ending June 30, 1864. Estimates for appropriations for the support of the	4	3	233
Mechanical report of the Patent Office for the year 1862. Letter from the Commissioner of Patents, transmitting the	10	52	
Medicine and Surgery, in the navy, for the year ending June 30, 1864. Estimates for appropriations for the support of the Bureau of	4	3	231
Metropolitan Police. Report of the Board of	2	1	648
Mexico. Letter from the President of the United States in relation to the alleged interference of our minister in favor of the French in	5	23	
Mexico. Letter from the President of the United States, transmitting information upon the present condition of	6	54	
Military Academy, for the year ending June 30, 1864. Estimates for appropriations for the subsistence of officers, allowances, and pay of the	4	3	161
Military Academy, for the year ending June 30, 1864. Estimates for appropriations for the current and ordinary expenses of the	4	3	188
Military Academy, for the year ending June 30, 1864. Estimates for appropriations required by the engineer department for the support of the	4	3	187
Military Academy at West Point. Letter from the Secretary of War, transmitting a copy of the report of the board of visitors at the	4	21	
Military establishment for the year 1862. Letter from the Secretary of War, transmitting a statement of the contingent expenses of the	8	84	
Minnesota. Annual report of the surveyor general for the district of	2	1	83
Missouri. Annual report of the surveyor general for the district of	2	1	90
Money received by the revenue officers of New York under the 5th section of the act of May 20, 1862. Letter from the Secretary of the Treasury relative to	6	60	
Morris, George U., lieutenant commanding, for valor and heroism in his defence of the United States sloop-of-war Cumberland. Message from the President of the United States recommending a vote of thanks to	4	9	
N.			
Nautical Almanac, for the year ending June 30, 1864. Estimates for appropriations for the support of the	4	3	220
Naval Academy, for the year ending June 30, 1864. Estimates for appropriations for the support of the	4	3	197
Naval Academy. Letter from the Secretary of the Navy relating to appointments in the	4	6	
Naval Observatory, for the year ending June 30, 1864. Estimates for appropriations for the support of the	4	3	219
Naval officers for the year ending June 30, 1863. Letter from the Secretary of the Navy, transmitting a statement of the pay, rations, and travel advanced to	7	77	
Navigation, for the year ending June 30, 1864. Estimates for appropriations for the support of the Bureau of	4	3	219
Navigation and Commerce of the United States with foreign countries during the year ending September 30, 1862	12	63	
Navy. Annual report of the Secretary of the	3	1	3
Papers accompanying the above report.			
Index to the reports of officers	3	1	49
Reports of officers	3	1	58
A.—List of deaths, resignations, and dismissals in the naval service since December 1, 1861	3	1	532
B.—Report of the board of officers appointed to witness the examination of the midshipmen at the Naval Academy, &c.	3	1	536
C.—Letter of the superintendent of the Naval Academy and reports of the commandant of midshipmen and commanding officer of the practice-ship	3	1	541
D.—Scale of bids for enlarging the southwest executive building	3	1	551
No. 1. Detailed estimates for the office of the Secretary of the Navy, southwest executive building, and Naval Academy	3	1	552
No. 2. Report, detailed estimates, &c., of the Bureau of Yards and Docks	3	1	557
No. 3. Detailed estimates of the Bureau of Equipment and Recruiting	3	1	703
No. 4. Detailed estimates of the Bureau of Navigation	3	1	707

Title.	Vol.	No.	P'ge.
No. 5. Report, detailed estimates, &c., of the Bureau of Ordnance	3	1	709
No. 6. Report, detailed estimates, &c., of the Bureau of Construction and Repair	3	1	728
No. 7. Detailed estimates of the Bureau of Steam Engineering	3	1	874
No. 8. Report, detailed estimates, &c., of the Bureau of Provisions and Clothing	3	1	876
No. 9. Report, detailed estimates, &c., of the Bureau of Medicine and Surgery	3	1	896
No. 10. Report of the commandant and detailed estimates of the paymaster and quartermaster of the marine corps	3	1	902
No. 11. General estimate (civil) of the office of the Secretary, bureaus, and southwest executive building	3	1	916
No. 12. Summary estimate for the naval service	3	1	917
No. 13. General estimate—navy proper	3	1	919
No. 14. General estimate—marine corps	3	1	919
No. 15. General estimate—special objects under control of the Navy Department	3	1	920
No. 16. Comptroller's statement of navy appropriations, expenditures, and balances	3	1	920
No. 17. Abstract of expenditures charged to the appropriation for "contingent expenses" of the navy, allowed in the settlement of accounts at the Fourth Auditor's office during the fiscal year ending June 30, 1862	3	1	924
Navy, transmitting estimates for appropriations for the support of the Navy Department for the year ending June 30, 1864. Letter from the Secretary of the	4	3	195
Navy relative to appointments in the Naval Academy. Letter from the Secretary of the	4	6	
Navy, recommending an appropriation for navy yard at League island. Letter from the Secretary of the	5	45	
Navy yard at League island. Letter from the Secretary of the Navy, recommending an appropriation for	5	45	
Navy, with reference to prize matters. Letter from the Secretary of the	7	73	
Navy, transmitting a statement of pay, rations, and travel advanced to naval officers for the year ending June 30, 1863. Letter from the Secretary of the	7	77	
Nebraska. Annual report of the surveyor general of the district of Kansas and	2	1	96
Nevada Territory for the year ending June 30, 1864. Estimates for appropriations for the support of the Indian agency in	4	3	76
Nevada Territory. Letter from the Acting Secretary of the Interior relative to the mineral resources of	5	26	
New Granada. Letter from the President of the United States relative to our minister at	5	33	
New Mexico. Annual report of the surveyor general of	2	1	117
O.			
Ordnance department of the army for the year ending June 30, 1864. Estimates of appropriations for the support of the	4	3	154
Ordnance service of the army for the year ending June 30, 1864. Estimates for appropriations required for the	4	3	184
Ordnance, of the navy, for the year ending June 30, 1864. Estimates for appropriations required for the support of the Bureau of	4	3	220
Ordnance supplies. Letter from the Secretary of War relative to providing additional means for the storage and preservation of	4	7	
Oregon. Annual report of the surveyor general for the district of	2	1	144
Oregon for the year ending June 30, 1864. Letter from the superintendent of Indian affairs, transmitting estimates of the expense of supporting the Indian agency in	4	3	88
P.			
Paroles granted to rebel officers. Letter from the Secretary of War relative to	6	57	
Passengers arriving in the United States for the year ending December 31, 1862. Letter from the Secretary of State, transmitting annual statement of	7	67	

Title.	Vol.	No.	P'ge.
Patent Office, up to January 1, 1863. Letter from the Secretary of the Interior showing the receipts and disbursements, and the names of persons employed in the	5	43	
Patent Office. Letter from the Secretary of the Interior relative to the mission of D. J. Browne to Europe, as agent of the agricultural division of the	6	53	
Patent Office. Letter from the Secretary of the Interior respecting the outstanding liabilities of the agricultural division of the	7	66	
Patents, in relation to the expenditure of the agricultural fund. Letter from the Commissioner of	4	5	
Patents, transmitting the Mechanical Report of the Patent Office for the year 1862. Letter from the Commissioner of	10	52	
Patents on agriculture and agricultural statistics for the year 1862. Report of the Commissioner of	11	78	
Paymaster General of the United States. Annual report of the	4	1	42
Paymaster General, transmitting estimates for appropriations for the support of the Paymaster General's department for the year ending June 30, 1864. Letter from the acting	4	3	147
Penitentiary. Annual report of the warden of the	2	1	661
Pensions. Annual report of the Commissioner of	2	1	577
Papers accompanying the above.			
A.—Tabular statement showing the number and yearly amount of original applications, and for increase of army pensions, admitted in each State and Territory during the fiscal year ending June 30, 1862	2	1	589
B.—Tabular statement showing the amount of arrearages of army pensions admitted and payable at the date of issuing the pension certificates, for the year ending June 30, 1862	2	1	591
C.—Tabular statement showing the amount paid for army pensions at the agencies in the several States and Territories, for the year ending June 30, 1862	2	1	591
D.—Tabular statement showing the amount of funds in the hands of each agent for paying army pensions, on the 30th day of June, 1863	2	1	592
E.—Tabular statement showing the number and yearly amount of army pensions on the rolls of each State and Territory on June 30, 1862	2	1	593
F.—Tabular statement having exclusive reference to navy pensions, and showing—			
1. The number and yearly amount of original applications admitted during the year ending June 30, 1862	2	1	594
2. The amount paid at the agencies in the several States and Territories during the year ending June 30, 1862	2	1	594
3. The number and yearly amount on the rolls on the 30th June, 1862	2	1	595
4. The amount of funds in the hands of the agents on the 30th day of June, 1862	2	1	595
Police. Report of the Board of Metropolitan	2	1	648
Pope, John, major general, concerning the operations of the army of Virginia. Letter from the Secretary of War transmitting a copy of the report of	8	81	
Porter, David D., acting rear-admiral, for brilliant services in attacking Arkansas Post. Letter from the President of the United States recommending a vote of thanks to	5	48	
Porter, Fitz John, general. Copy of the proceedings of the court-martial in the trial of	7	71	
Post Office Department for the year ending June 30, 1862. Letter from the Treasurer of the United States transmitting a report of the receipts and disbursements of the	7	64	
Postmaster General. Annual report of the	4	1	119
Papers accompanying the above.			
1. Tabular statement showing the number of each class of post offices in the several States and Territories	4	1	152
2. Tabular statement of the operations of the appointment office for the year ending June 30, 1862, arranged by States	4	1	153
3. Classifying changes made in the appointment office during the year ending June 30, 1862	4	1	154

Title.	Vol.	No.	P'ge.
4. Tabular statement showing the increase or decrease of post offices in the several States and Territories during the year ending June 30, 1862	4	1	155
5. Tabular statement of the number and classes of agents, with their compensation	4	1	156
6. Tabular statement showing the operation and results of the foreign mail service for the fiscal year ending June 30, 1862	4	1	157
7. Postal convention between the United States and Mexico	4	1	159
8. Postal convention between the United States and Guatemala	4	1	163
9. Settlement of further details under the postal treaty with Great Britain	4	1	165
10. Letter suggesting improvements in international postal arrangements	4	1	165
11. Table of mail service for the year ending June 30, 1862	4	1	170
12. Mail service in the States of Michigan, Indiana, Illinois, Wisconsin, Iowa, Minnesota, Kentucky, California, Oregon, and Kansas, and the Territories of New Mexico, Utah, Nebraska, Washington, Colorado, and Dakota	4	1	172
13. Railroad service as in operation on the 30th of June, 1862	4	1	173
14. Mail routes and service on which contractors were reported disloyal and contracts changed to other parties	4	1	188
15. Tabular statement of the receipts of the Post Office Department for the fiscal year ending June 30, 1862	4	1	189
16. Tabular statement of the expenditures of the Post Office Department for the fiscal year ending June 30, 1862	4	1	190
17. Estimates of expenditures for the year 1864	4	1	191
18. Postage stamps and stamped envelopes issued during the year 1862	4	1	192
19. Comparative statement of the value of stamps and stamped envelopes issued during the last three years	4	1	193
20. Statement of money letters received during the year ending June 30, 1862	4	1	193
21. Statement of "minor dead letters" containing papers of value other than money registered and sent to the writers or owners thereof, from the 1st of July, 1861, to the 1st of July, 1862	4	1	194
22. Causes of the non-delivery of 21,493 valuable letters	4	1	194
23. Reasons assigned for the return to the department of 139,580 letters sent out for delivery to the writers	4		195
24. Statement of the foreign department of the dead letter office, of dead letters returned to foreign countries during the fiscal year 1861–'62	4		195
25. Statement of dead letters received from foreign countries during the fiscal year 1861–'62	4		195
26. Comparative statement of the number of miles in the American and British service, by the various modes of carriage, excluding foot	4	1	196
27. Statement showing postal revenue and expenditures of the United States, in toto and per capita, according to population, at eight successive decades, from 1790 to 1862, inclusive	4	1	196
28. Auditor's report	4	1	197
Showing—			
1. The receipts of the department under their several heads	4	1	212
2. The expenditures of the department under their several heads	4		213
3. The postal receipts and expenditures in the several States and Territories	4	1	214
4. The number of letters, circulars, newspapers, and pamphlets received and delivered by carriers, and the amount received and paid out for carriage in the cities named therein	4	1	216
5. The amount of letter postage on British mails received in and sent from the United States	4	1	217
6. The amount of letter postage on Prussian mails received in and sent from the United States	4	1	218
7. The amount of letter postage on French mails received in and sent from the United States	4	1	219
8. The amount of letter postage on Belgian mails received in and sent from the United States	4	1	220
9. The amount of letter postage on Bremen mails received in and sent from the United States	4	1	221
10. The amount of letter postage on Hamburg mails received in and sent from the United States	4	1	222
11. The number of letters and newspapers exchanged between the United States and the United Kingdom, in British mails	4		223
12. The number of letters and newspapers exchanged between the United States and the Kingdom of Prussia, in closed mails	4	1	223

Title.	Vol.	No.	P'ge.
13. The number of letters and newspapers exchanged between the United States and France	4	1	224
14. The number of letters and newspapers exchanged between the United States and Belgium	4	1	224
15. The number of letters and newspapers exchanged between the United States and Bremen	4	1	225
16. The number of letters and newspapers exchanged between the United States and Hamburg	4	1	225
17. The revenue to the United States, also to the United States Post Office Department, by the Cunard line	4	1	226
18. The closed mail account	4	1	227
19. The receipts and disbursements in closed mails between the United States and Prussia	4	1	228
20. A statement of the letters and newspapers, with the several postages, conveyed by the various ocean lines of steamers	4	1	229
21. The amount of postages on mails exchanged between the United States and British Provinces	4	1	229
22. The postal account of the United Kingdom of Great Britain and Ireland with the United States	4	1	230
23. The account of the Kingdom of Prussia with the United States	4	1	231
24. The account of the general post office of Belgium with the U. States	4	1	232
25. The account of the general post office of France with the U. States	4	1	234
26. The account of the post office of Bremen with the United States	4	1	235
27. The account of the post office of Hamburg with the United States	4	1	236
Statements are likewise appended showing the postal balances due to foreign governments; also statements showing the amounts due to the various lines of ocean steamers for sea and inland postages	4	1	237 238
Postmaster General, transmitting estimates for the postal expenditures for the year ending June 30, 1864. Letter from the	4	13	
Postmaster General, relative to the cost of transporting the mails between Washington city and New York. Letter from the	5	41	
Postmaster General, reporting fines and deductions from pay of contractors for the year ending June 30, 1862. Letter from the	6	59	
Postmaster General, transmitting annual report of the Post Office Department. Letter from the	8	82	
Papers accompanying the above.			
1. An abstract of the offers received under the advertisement of February 4, 1862, and of contracts made on routes established by the act of February 27, 1861, the service to commence on the 1st of July, 1862, and terminate June 30, 1865, in the States of New Hampshire, Vermont, Massachusetts, Connecticut, and New York; on the 30th of June, 1864, in New Jersey, Pennsylvania, Maryland, and Ohio; and on the 30th of June, 1863, in Virginia, (western counties)	8	82	3
This statement also includes all transfers allowed and contracts negotiated in the same States and others.			
2. An abstract of the offers received under the advertisment of November 30, 1861, inviting proposals for conveying the mail in the States of Kentucky, Missouri, Iowa, Illinois, Indiana, Michigan, Wisconsin, Minnesota, Kansas, and the Territories of Nebraska, Colorado, and Dakota, for the contract term of four years from July 1, 1862, to June 30, 1866, and a report of the contracts made in pursuance thereof	8	82	55
3. An abstract of the offers received under the advertisement of October 30, 1861, inviting proposals in the States of California and Oregon, and the Territories of Washington, Utah, and New Mexico, for the same contract term, July 1, 1862, to June 30, 1866, and of contracts made	8	82	726
4. A statement of all the land and water mails established or ordered within the year preceding July 1, 1862, other than those let to contract at the annual lettings	8	82	774
These abstracts (3 and 4) embrace the routes in the States named created by the act of February 27, 1861.			
5. A report of allowances made to contractors for additional services within the same year	8	82	782
6. A report of curtailments of mail service and pay ordered within the same year	8	82	7 93

Title.	Vol.	No.	P'ge.
President of the United States on the state of the Union, with accompanying documents and reports. Annual message of the	1	1	3
President of the United States, in relation to the collision between the United States war steamer San Jaci nto and the French brig Jules et Marie. Message from the	4	4	
President of the United States, recommending a vote of thanks to Commander John L. Worden for skill and gallantry exhibited in the battle between the Monitor and Merrimack. Message from the	4	8	
President of the United States, recommending a vote of thanks to Lieutenant Commander George U. Morris for valor and heroism in his defence of the United States sloop-of-war Cumberland. Message from the	4	9	
President of the United States, relative to the arrest of persons on board the rebel brig Sumter, at Tangier. Message from the	4	10	
President of the United States, relative to swords formerly the property of General David E. Twiggs. Message from the	4	11	
President of the United States, relative to publications presented by the British Museum to the Library of Congress. Message from the	4	15	
President of the United States, relative to the alleged interference of our minister to Mexico in favor of the French. Message from the	5	23	
President of the United States, relative to the temporary appointment of heads of departments, in case of death, absence, or sickness. Message from the	5	24	
President of the United States, transmitting correspondence of the minister of the Hanseatic republics relative to an international agricultural exhibition at Hamburg. Message from the	5	31	
President of the United States, relative to our minister at New Granada. Message from the	5	33	
President of the United States, on signing the joint resolution for the immediate payment of the army and navy of the United States. Message from the	5	37	
President of the United States, recommending a vote of thanks to Acting Rear-Admiral David D. Porter for brilliant services in attacking Arkansas Post. Message from the	5	48	
President of the United States, transmitting information upon the present condition of Mexico. Message from the	6	54	
President of the United States, respecting the cause of the recent outbreaks of the Indian tribes in the Northwest. Message from the	7	68	
Prize matters. Letter from the Secretary of the Navy, with reference to	7	73	
Provisions and Clothing, in the navy, for the year ending June 30, 1864. Estimates for appropriations for the support of the Bureau of	4	3	229
Public Buildings. Annual report of the Commissioner of	2	1	596
Public Buildings, from November 1, 1861, to June 30, 1862. Statement of the receipts and expenditures under the direction of the Commissioner of	2	1	603
Q.			
Quartermaster General of the United States. Annual report of the	4	1	60
Quartermaster General, transmitting estimates for appropriations for the support of the Quartermaster General's department for the year ending June 30, 1864. Letter from the	4	3	167
S.			
San Jacinto and the French brig Jules et Marie. Message from the President of the United States, relative to the collision between the United States war steamer	4	4	
Seamen registered in the several ports of entry of the United States for the year ending September 30, 1862. Letter from the Secretary of State, showing the number of	4	2	
Slaves in the disloyal States. Letter from the Secretary of the Treasury, relative to the employment and sustenance of	7	72	
Soldiers. Letter from the Secretary of the Treasury, relative to delays in the payment of money due to	4	16	
Soldiers, &c. Letter from the Secretary of the Treasury giving further information relative to the delay in the payment of	5	29	
Soldiers on the pay-roll of the army. Letter from the Secretary of War, relative to the number of	5	40	

Title.	Vol.	No.	P'ge.
State, transmitting statement showing the number of seamen registered in the several ports of entry in the United States for the year ending September 30, 1862. Letter from the Secretary of	4	2	
State, relative to the expenditure of the contingent fund of the State Department. Letter from the Secretary of	5	42	
State, transmitting annual statement of the arrival of passengers for the year ending December 31, 1862. Letter from the Secretary of	7	67	
State, transmitting a report on the commercial relations of the United States with foreign countries for the year ending September 30, 1862. Letter from the Secretary of	12	63	
State Department upon foreign affairs. Correspondence of the	1	1	
State Department. Letter from the Secretary of State relative to the expenditure of the contingent fund of the	5	42	
Statistics in connexion with the Department of the Interior. Letter from the Secretary of the Interior relative to establishing a bureau of	5	38	
Steam Engineering, in the navy, for the year ending June 30, 1864. Estimates for appropriations for the support of the Bureau of	4	3	227
Sumter, at Tangier. Message from the President of the United States relative to the arrest of persons on board the rebel brig	4	10	
Superintendent of the Washington Aqueduct. Report of the	2	1	612
Superintendent, transmitting estimates for the support of the government hospital for the insane for the year ending June 30, 1864. Letter from the	4	3	106
Superintendent of Indian affairs for the southern superintendency. Letter from the Secretary of the Interior relative to the accounts of the	5	47	
Superintendent of Indian affairs for the southern superintendency. Letter from the Secretary of the Interior transmitting the accounts of the	7	75	
Surgeon General of the United States. Annual report of the	4	1	50
Surgeon General, transmitting estimates for appropriations for the support of the Surgeon General's department for the year ending June 30, 1864. Letter from the	4	3	182
Surveyor general of Wisconsin and Iowa. Annual report of the	2	1	80
Surveyor general of Minnesota. Annual report of the	2	1	83
Surveyor general of Missouri. Annual report of the	2	1	90
Surveyor general of Dakota. Annual report of the	2	1	91
Surveyor general of Kansas and Nebraska	2	1	96
Surveyor general of Colorado and Utah	2	1	112
Surveyor general of New Mexico. Annual report of the	2	1	117
Surveyor general of California. Annual report of the	2	1	133
Surveyor general of Oregon. Annual report of the	2	1	144
Surveyor general of Washington Territory. Annual report of the	2	1	150
Sutlers and non-combatants held as prisoners at Richmond. Letter from the Secretary of War relative to	4	17	
T.			
Transportation of troops, munitions of war, &c. Letter from the Secretary of War relative to the	8	79	
Treasurer of the Metropolitan Police, transmitting estimates for appropriations for the support of the Metropolitan Police for the year ending June 30, 1864. Letfrom the	4	3	108
Treasurer of the United States, transmitting a report of the receipts and disbursements of the Post Office Department for the year ending June 30, 1864. Letter from the	7	7	64
Treasury, transmitting estimates for additional appropriations required to complete the service of the fiscal year ending June 30, 1863, and previous years. Letter from the Secretary of the	4	3	3
Treasury, transmitting estimates for appropriations, specific and indefinite, made by former acts of Congress, which may be required for the service of the last three quarters of the year ending June 30, 1863. Letter from the Register of the	4	3	12
Treasury, transmitting estimates for appropriations for the year ending June 30, 1864. Letter from the Secretary of the	4	3	13
Treasury Department for the year ending June 30, 1862. Letter from the Secretary of the Treasury relative to the expenditure of the contingent fund of the	4	12	

Title.	Vol.	No.	P'ge.
Treasury, relative to delays in the payment of money due to soldiers. Letter from the Secretary of the	4	16	
Treasury, transmitting annual report of the condition of the banks in the United States. Letter from the Secretary of the	5	25	
Treasury, relative to the United States loan created in 1841, &c. Letter from the Secretary of the	5	27	
Treasury, giving further information relative to the delay in the payment of soldiers, &c. Letter from the Secretary of the	5	29	
Treasury, relative to money received by the revenue officers of New York under the fifth section of the act of May 20, 1862. Letter from the Secretary of the	6	60	
Treasury, transmitting a list of clerks employed in the Treasury Department, with compensation paid to each. Letter from the Secretary of the	7	70	
Treasury, relative to the employment and sustenance of slaves in the disloyal States. Letter from the Secretary of the	7	72	
Topographical engineers, for the year ending June 30, 1864. Estimates for appropriations for the support of the corps of	4	3	153
Topographical engineers, for the year ending June 30, 1864. Estimates for appropriations required for the support of the bureau of	4	3	194
Twiggs, David E., General. Message from the President of the United States relative to swords formerly the property of	4	11	
U.			
Utah. Annual report of the surveyor general of Colarado and	2	1	112
Utah Territory for the year ending June 30, 1862. Estimates of goods and other expenses for the support of the Indian agency in	4	3	78
Utah Territory. Account of Peter Boyce, Indian farm agent at Corn creek	4	3	82
V.			
Volunteers in the service of the United States for the year ending June 30, 1864. Estimates for appropriations for the pay of	4		163
W.			
War. Annual report of the Secretary of	4	1	3
Papers accompanying the above.			
Report of the General-in-chief	4	1	20
Preliminary report of the operations of the Army of the Potomac since June 25, 1862	4	1	29
Report of the Adjutant General	4	1	41
Report of the Paymaster General	4	1	42
Report of the Surgeon General	4	1	50
Report of the Commissary General	4	1	59
Report of the Quartermaster General	4	1	60
Papers accompanying the above report.			
No. 1. Statement of horses, mules, wagons, ambulances, &c., &c., purchased during the fiscal year 1862 and to September 30, 1862	4	1	83
No. 2. Issues from the manufacturing and purchasing depots, and by States, during the fiscal year 1861–'62, and the amount on hand June 30, 1862	4	1	86
No. 3. Copy of letter from General Totten to Lieutenant General Scott on the need of a fleet of gunboats	4	1	88
No. 4. Copy of contract for gunboats on the western rivers	4	1	90
No. 5. List of gunboats, mortar boats, tugs, and other vessels composing the gunboat fleet	4	1	103
No. 6. List of rams composing the ram fleet	4	1	106
No. 7. Stations, June 30, 1862, of the principal officers of the quarter master's department, both regular and volunteer, with their duties	4	1	10
No. 8. Copy of Quartermaster General's letter to the Secretary of War, May 23, 1862, in regard to estimate for gunboat and ram fleet	4	1	110

Title.	Vol.	No.	Page.
No. 9. Copy of letter of Thomas A. Scott of July 12, 1861, relative to settlement with railroad companies	4	1	111
No. 10. Report of committee as to rates to the government for transportation of passengers and supplies	4	1	112
No. 11. Regulations adopted in accordance with recommendation of the convention of railroad managers, for the guidance of the officers of the Quartermaster General's office in the settlement of accounts with railroad and transportation companies	4	1	113
No. 12. Copy of letter from Thomas A. Scott, Assistant Secretary of War, of October 12, 1861, relative to settling the accounts of the Baltimore and Ohio Railroad Company	4	1	115
No. 13. Copy of letter of the Quartermaster General to the Secretary of War, September 11, 1862, in regard to continuing the mode of settlement with Baltimore and Ohio Railroad Company, as directed April 4, 1862, (approved by the Secretary of War)	4	1	115
No. 14. Copy of letter of the Quartermaster General to the Secretary of War, November 3, 1862, on the same subject as No. 13	4	1	116
War, transmitting estimates for additional appropriations required for the service of the department for the year ending June 30, 1863. Letter from the Secretary of	4	3	7
War, transmitting estimates for appropriations for the support of the War Department for the year ending June 30, 1864. Letter from the Secretary of	4	3	146
War, relative to providing additional means for the preservation and storage of ordnance supplies. Letter from the Secretary of	4	7	
War, relative to sutlers and non-combatants held as prisoners at Richmond. Letter from the Secretary of	4	17	
War, transmitting a copy of the report of the visitors to the Military Academy at West Point in June last. Letter from the Secretary of	4	21	
War, relative to the number of soldiers on the pay-roll of the army. Letter from the Secretary of	5	40	
War, relative to certain property seized by the military governor of the District of Columbia as the property of a rebel. Letter from the Secretary of	5	44	
War, relative to generals who are not assigned to any command. Letter from the Secretary of	5	46	
War, relative to paroles granted to rebel officers. Letter from the Secretary of	6	57	
War, relative to the claim of John Hutchinson for damages sustained at the hands of the government. Letter from the Secretary of	6	58	
War, reporting the names, number, &c., of brigadier and major generals not assigned to actual command. Letter from the Secretary of	7	65	
War, transmitting a copy of the proceedings of the court-martial for the trial of Major General Fitz John Porter. Letter from the Secretary of	7	71	
War, relative to the transportation of troops, munitions of war, &c. Letter from the Secretary of	8	79	
War, transmitting the report of Captain J. L. Fisk, of the expedition to escort emigrants from Fort Abercrombie to Fort Benton, &c. Letter from the Secretary of	8	80	
War, transmitting a copy of the report of Major General John Pope, concerning the operations of the Army of Virginia. Letter from the Secretary of	8	81	
War, transmitting a statement of the contingent expenses of the military establishment for the year 1862. Letter from the Secretary of	8	84	
Warden of the penitentiary. Annual report of the	2	1	661
Washington Territory. Annual report of the surveyor general of	2	1	150
Washington Aqueduct. Report of the superintendent of the	2	1	612
White Crow. Letter from O. H. Irish, Indian agent, relative to an appropriation to pay the claim of	4	3	81
White Crow. Letter from the Commissioner of Indian Affairs relative to the payment of the claim of	4	3	81
Wisconsin and Iowa. Annual report of the surveyor general of	2	1	80
Worden, John L., commander, for skill and gallantry exhibited in the battle between the Monitor and Merrimack. Message from the President of the United States recommending a vote of thanks to	4	8	
Y.			
Yards and Docks, for the year ending June 30, 1864. Estimates for appropriations for the support of the Bureau of	4	3	200

37TH CONGRESS, 3d Session. } HOUSE OF REPRESENTATIVES. { Ex. Doc. No. 52.

REPORT

OF THE

COMMISSIONER OF PATENTS

FOR THE YEAR 1862.

ARTS AND MANUFACTURES.

VOLUME II.

WASHINGTON:
GOVERNMENT PRINTING OFFICE.
1865.

ILLUSTRATIONS.

34046

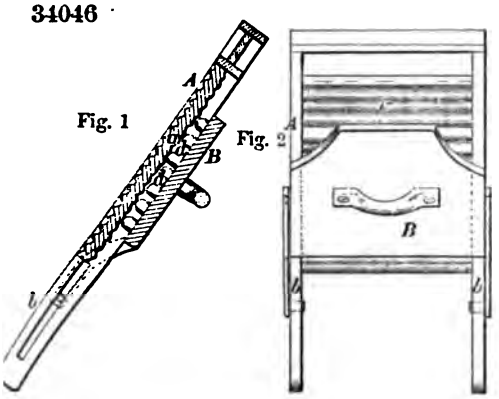

34047

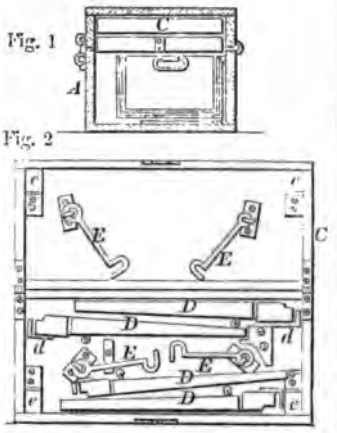

34049

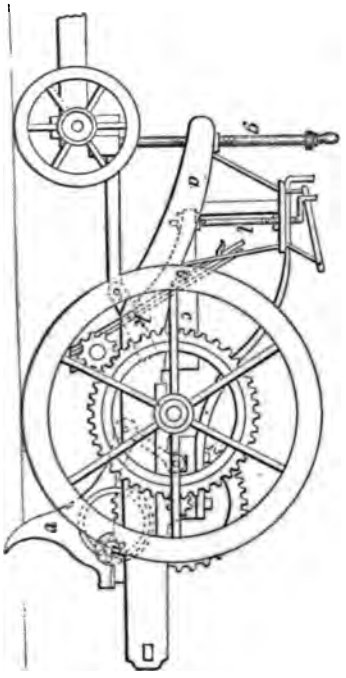

34045

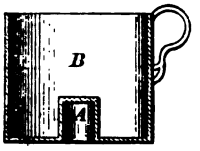

34048

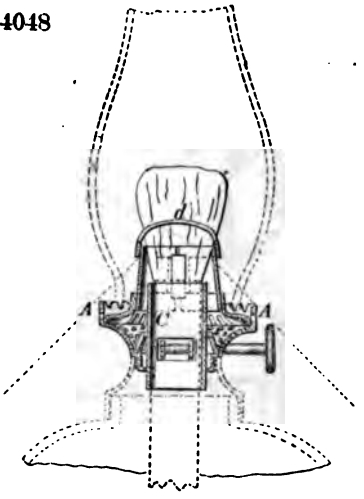

34050

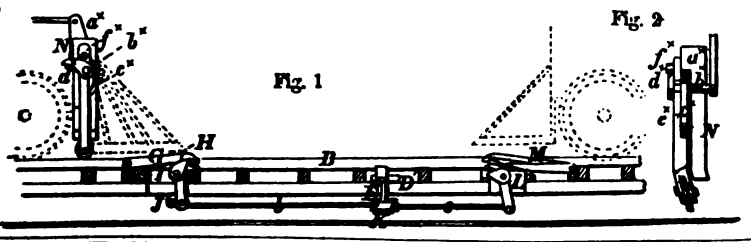

34051

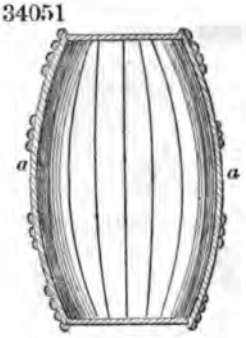

34053

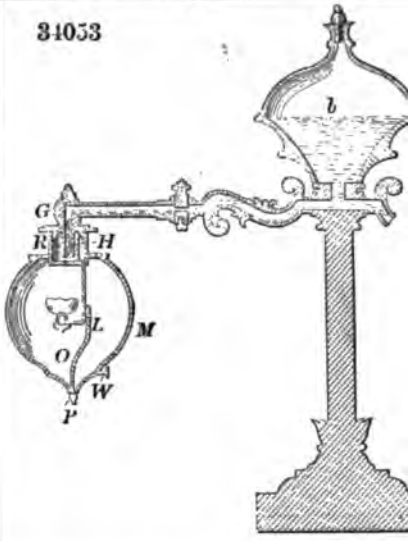

34052

Fig. 1

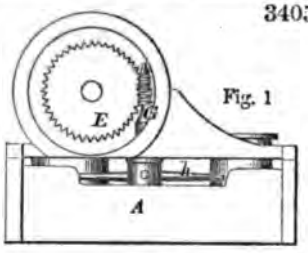

Fig. 2

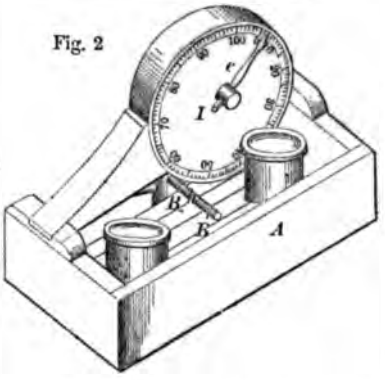

34054

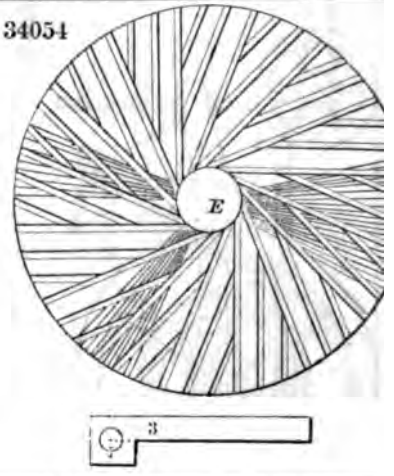

34055

Fig. 2

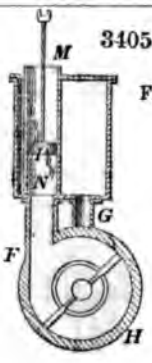

Fig. 1

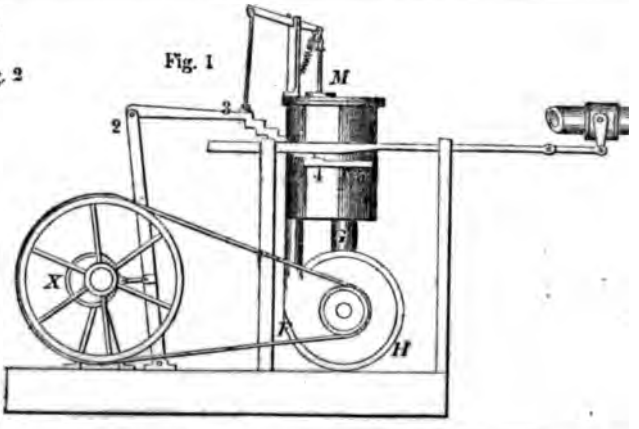

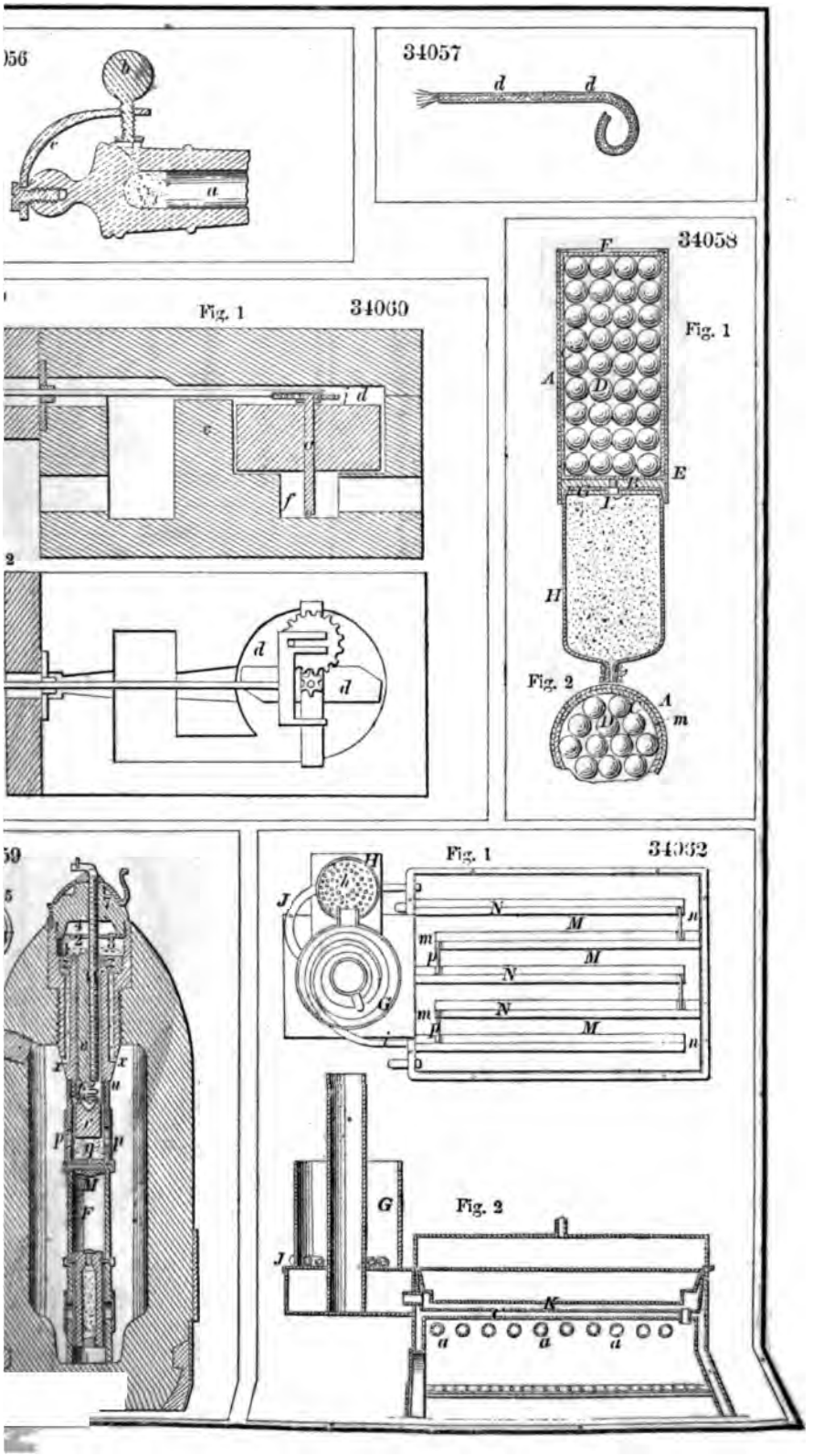
56
34057
34058
Fig. 1
34060
Fig. 1
Fig. 2
Fig. 1
34062
Fig. 2

34063

Fig. 1

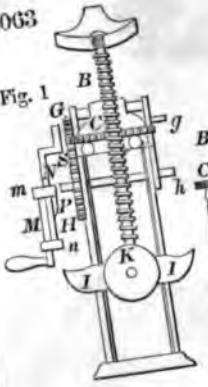

Fig. 2

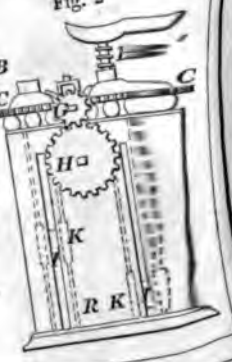

34064

Fig. 1

Fig. 2

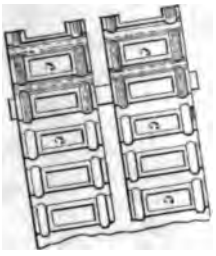

34065

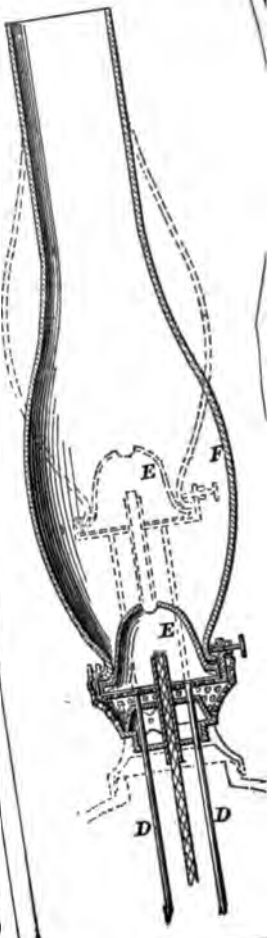

34066

Fig. 1

Fig. 2

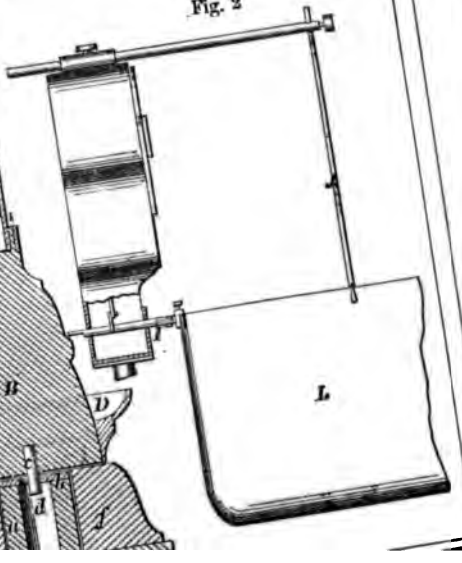

34067

Fig. 1

Fig. 2

34068

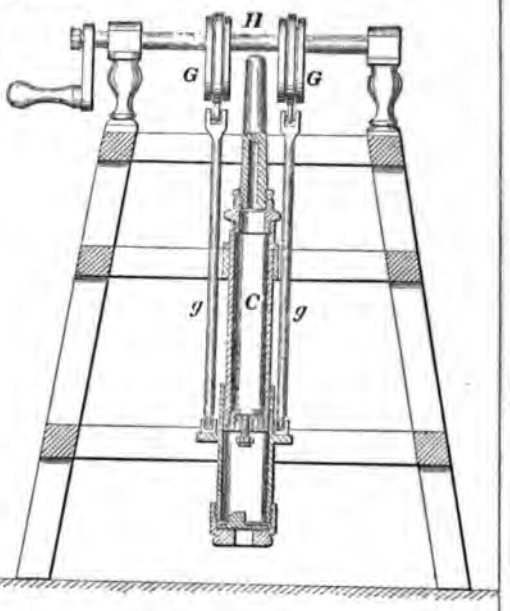

34069 Fig. 1 Fig. 2 Fig. 3

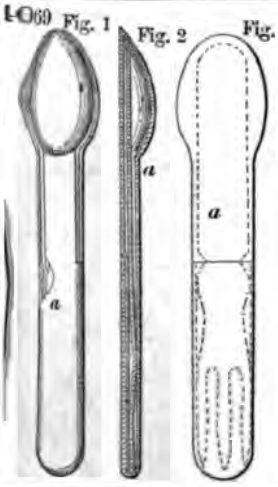

34070

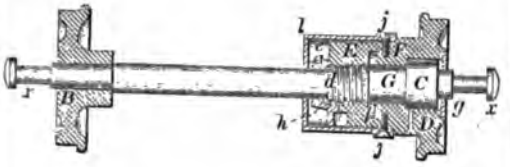

34071

Fig. 1

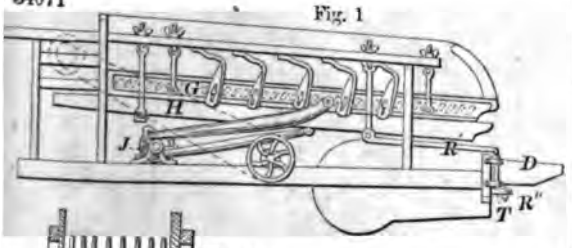

Fig. 2

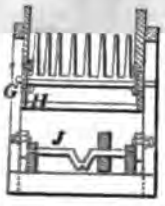

34072

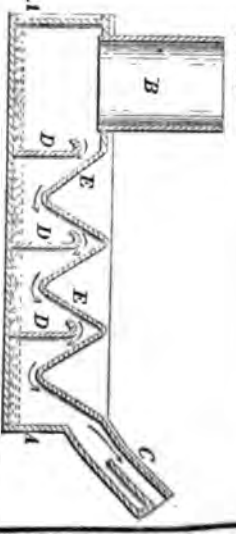

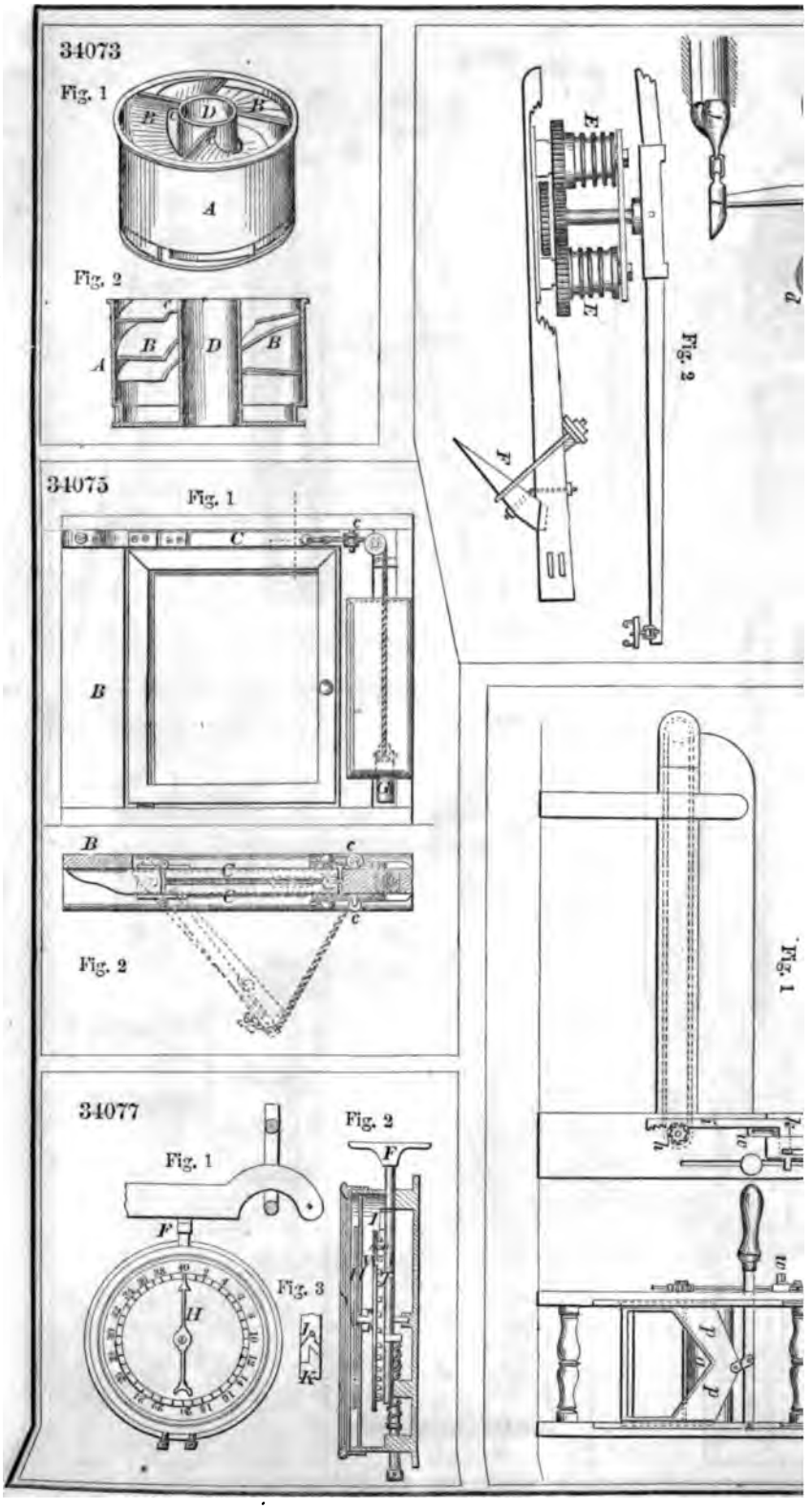
34073
Fig. 1
Fig. 2
34075
Fig. 1
Fig. 2
34077
Fig. 1
Fig. 2
Fig. 3
Fig. 2
Fig. 1

34078

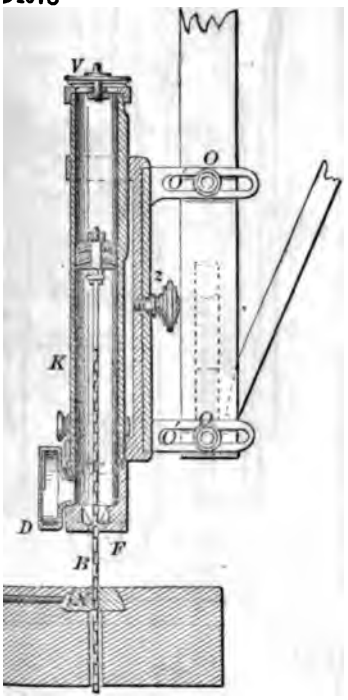

34080

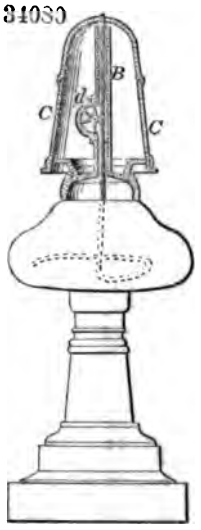

34079

34081

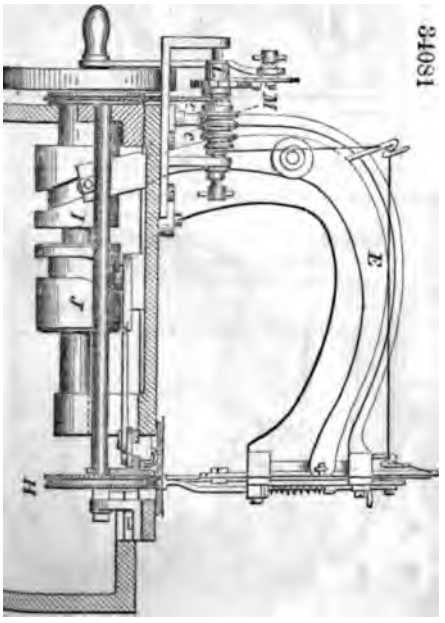

34082

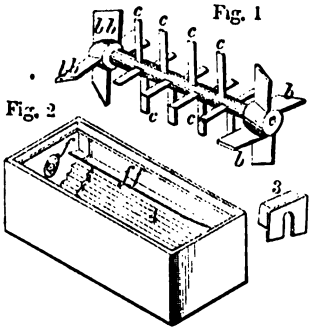

34083

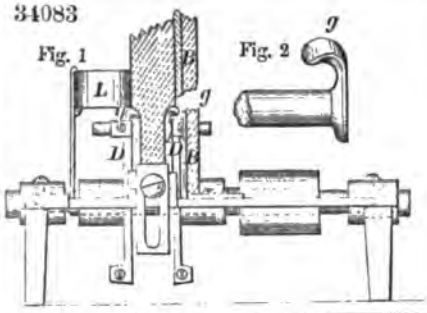

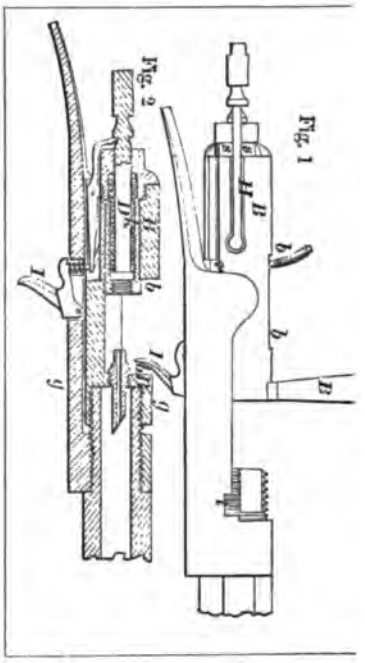

34089

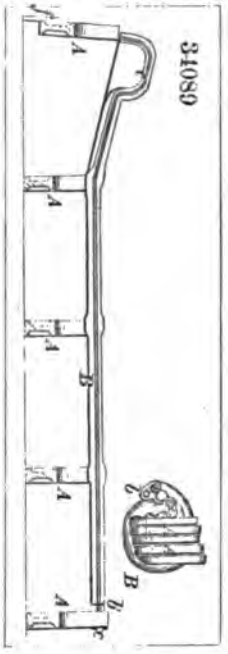

34085

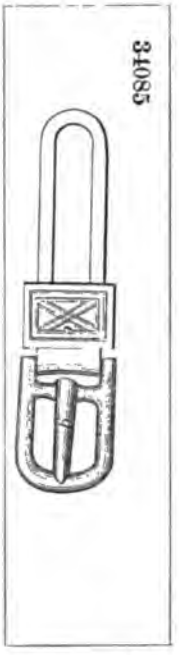

34087

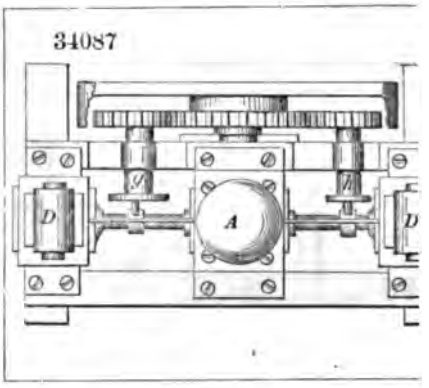

34086

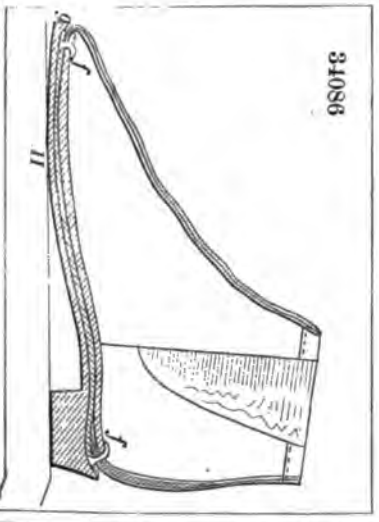

34088

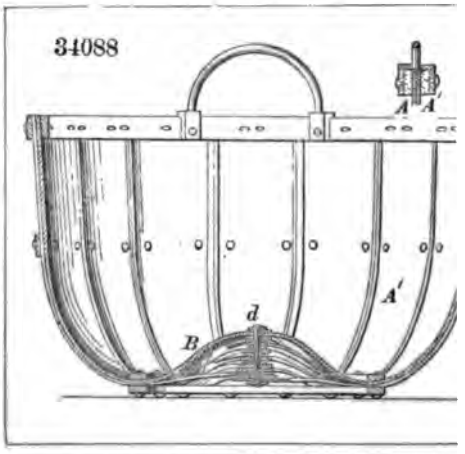

34091

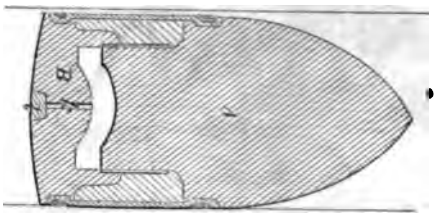

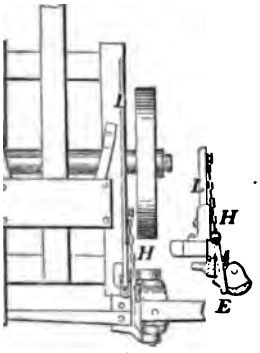

34092

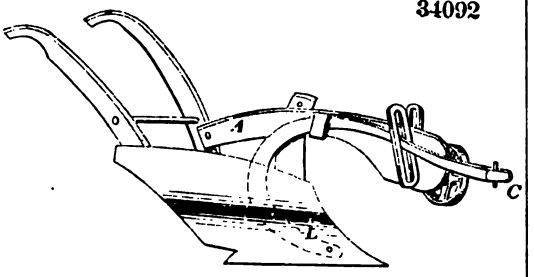

34093

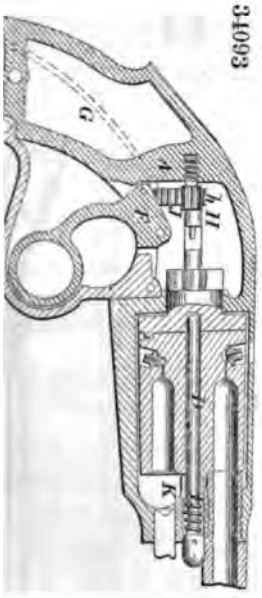

34094

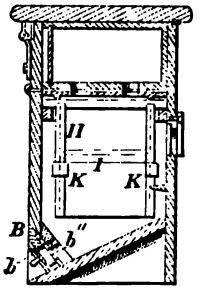

34096

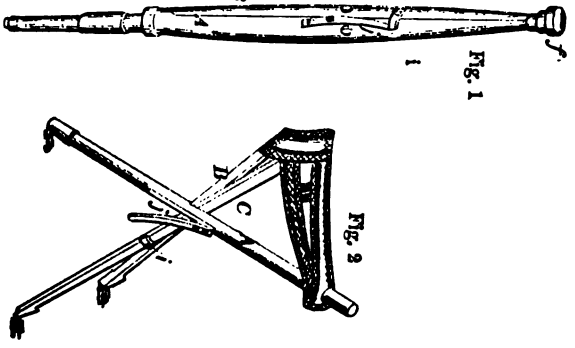

34097

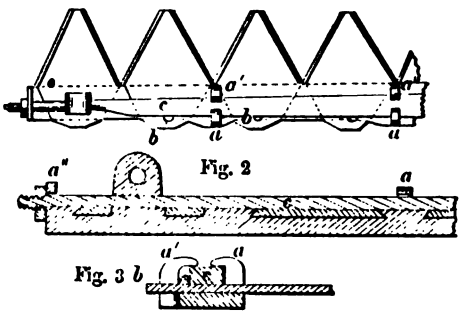

34098

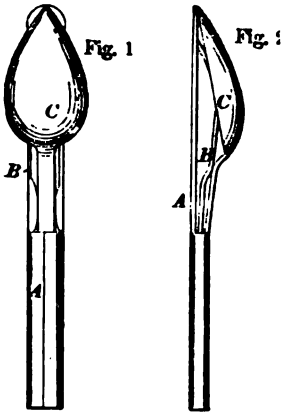

34100

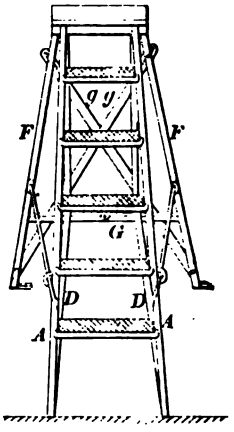

34101

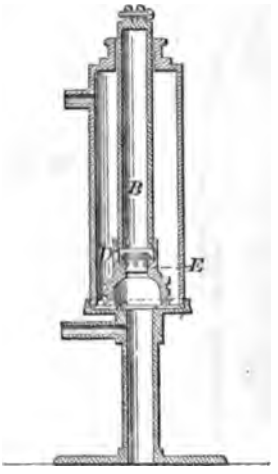

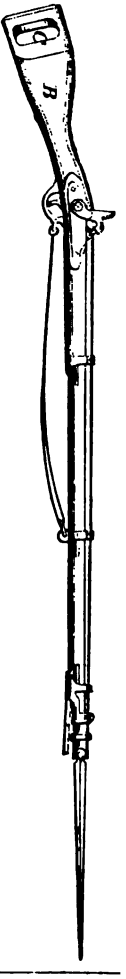

34102

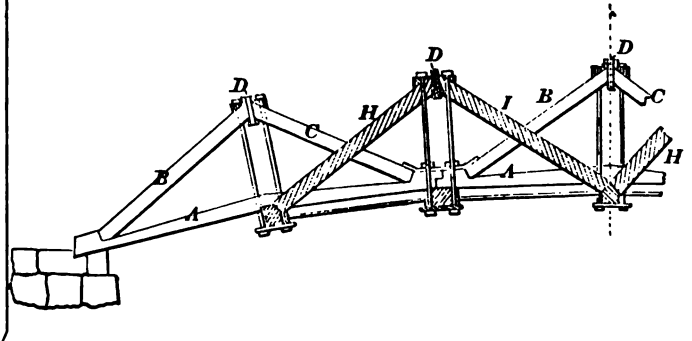

104

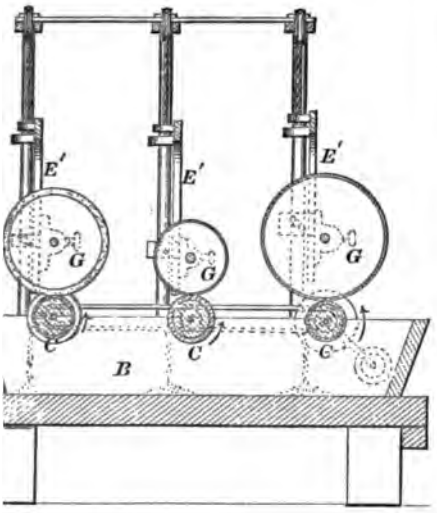

34105

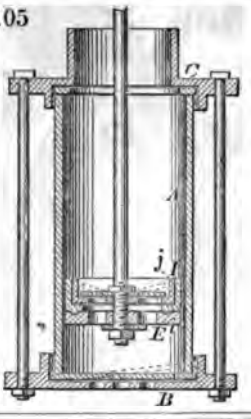

34107

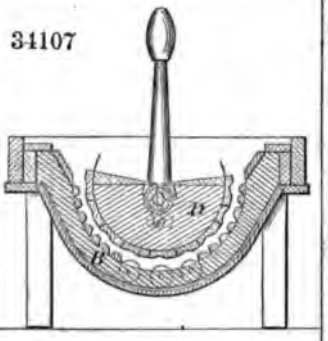

109

Fig. 1

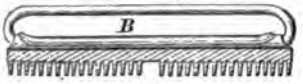

Fig. 2

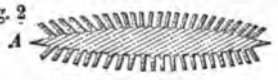

Fig. 3

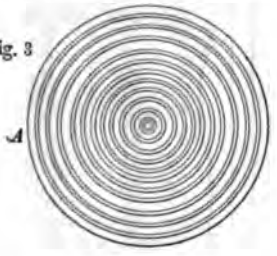

34110

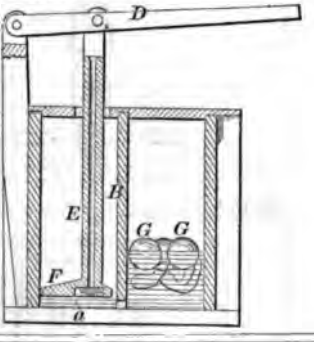

08

Fig. 1

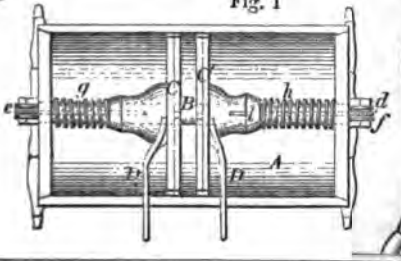

Fig. 2

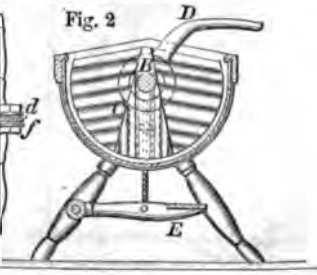

34111

Fig. 1

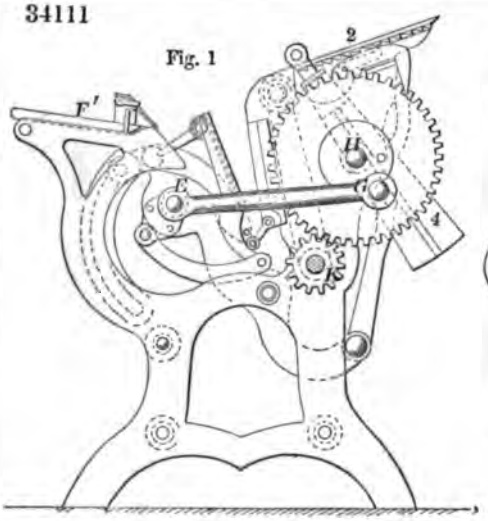

Fig. 2

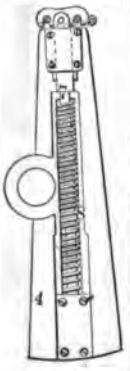

34112

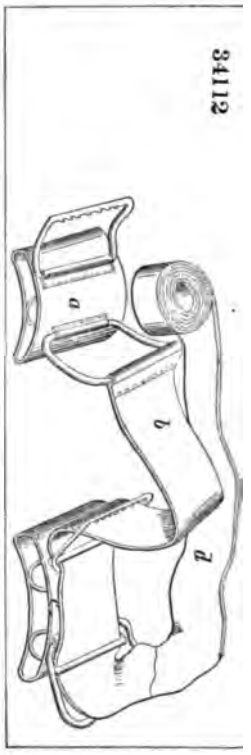

34113

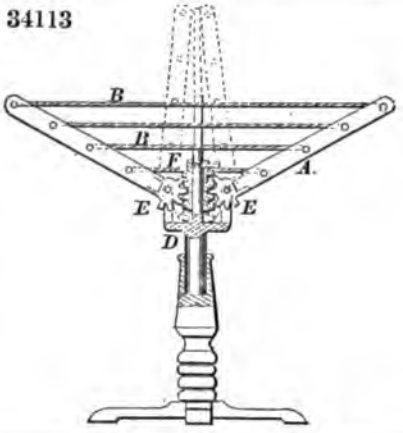

34114

Fig. 1

Fig. 2

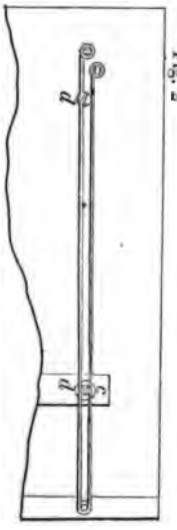

34115

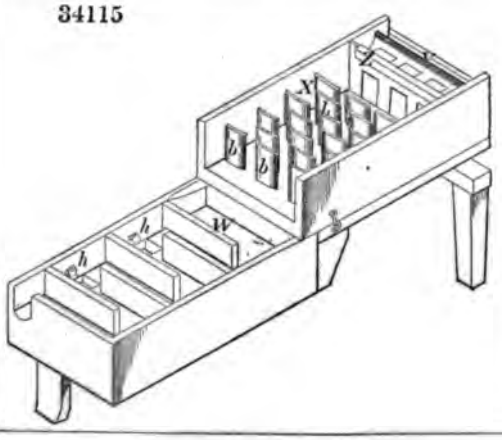

34116

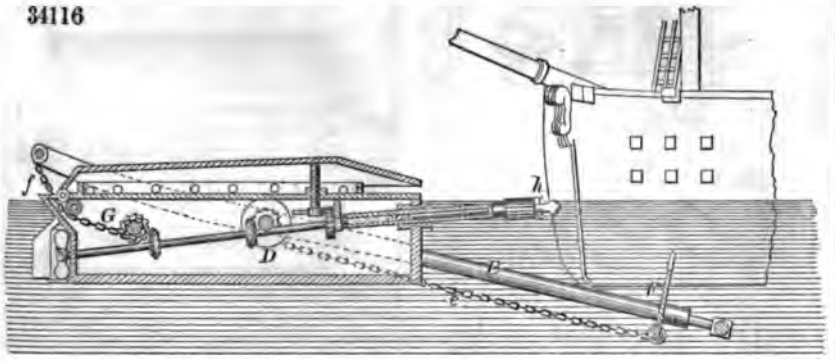

34117

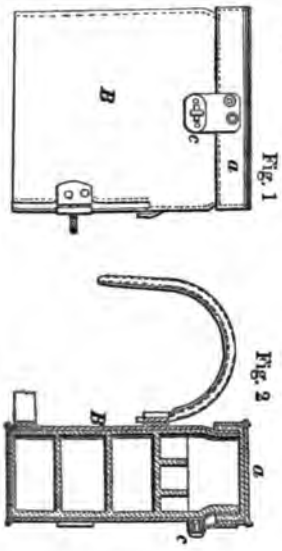

34118

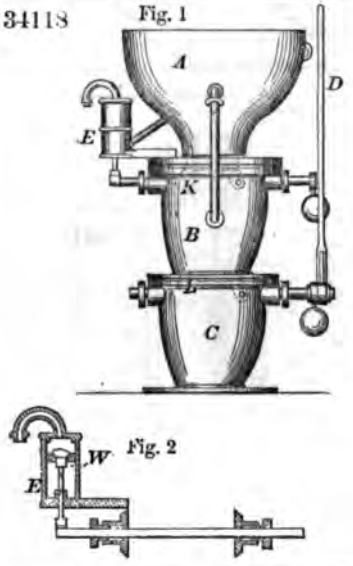

34119

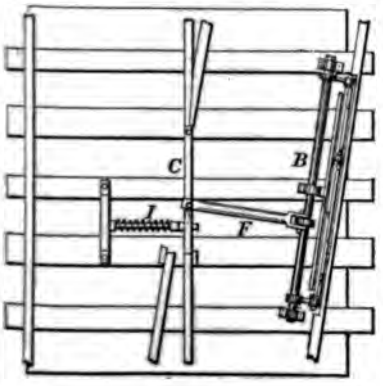

34120

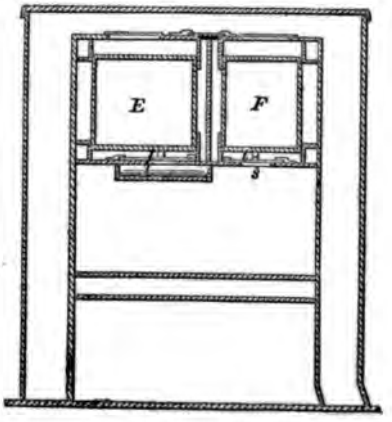

34121

Fig. 2

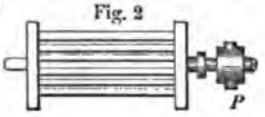

Fig. 1

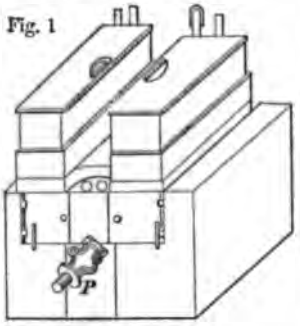

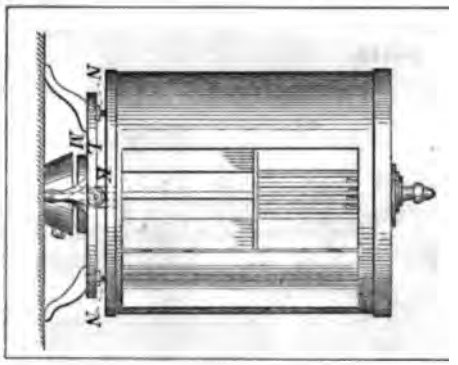

34125

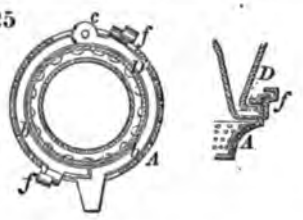

34126

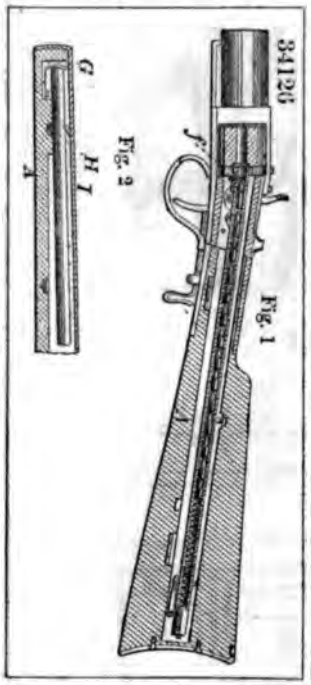

34124

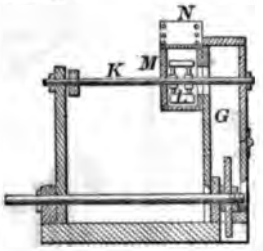

34123

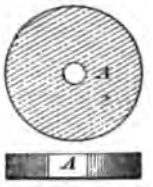

34127

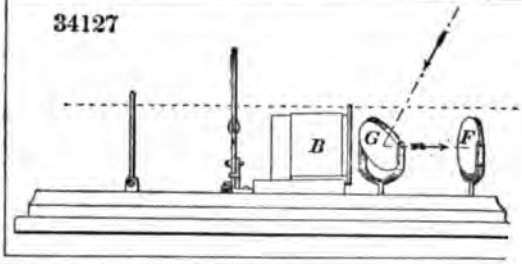

34128

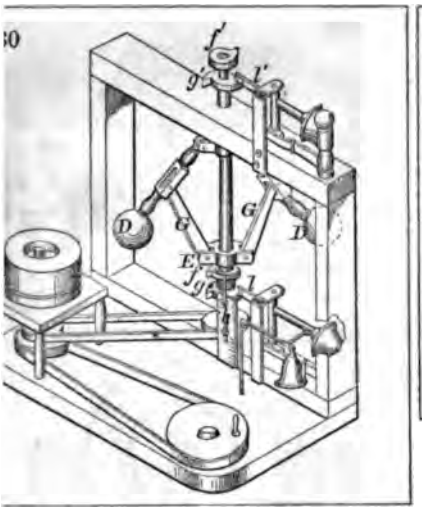

34129

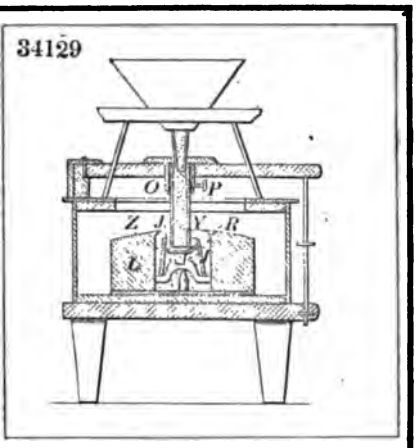

34131

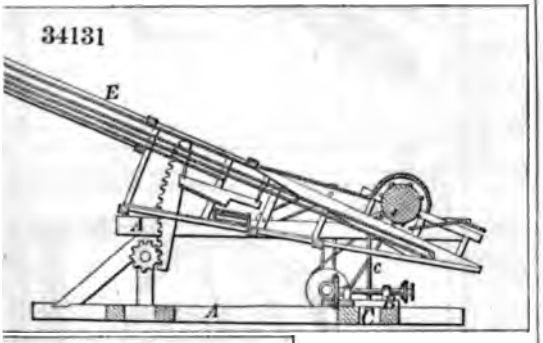

34132

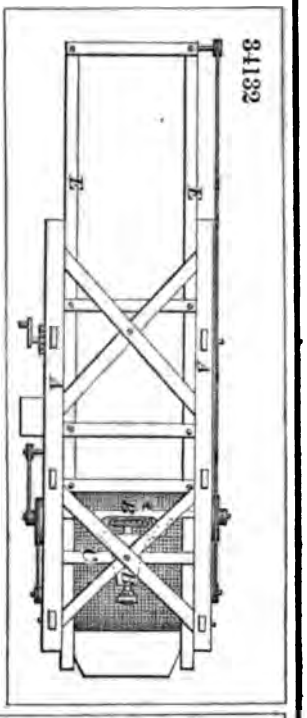

34133

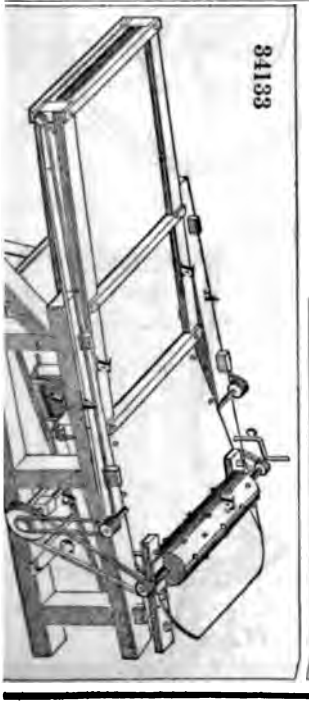

34134

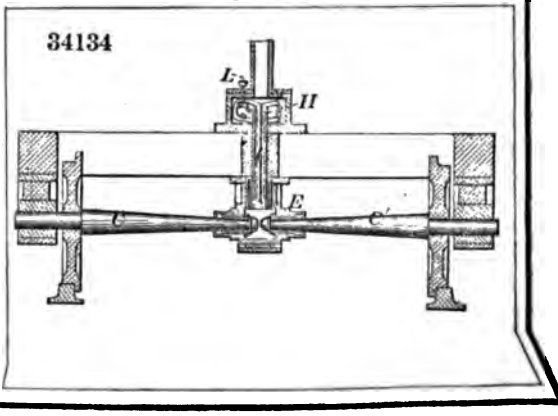

34135

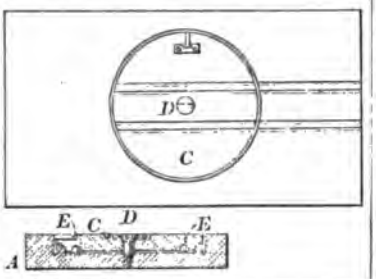

34136

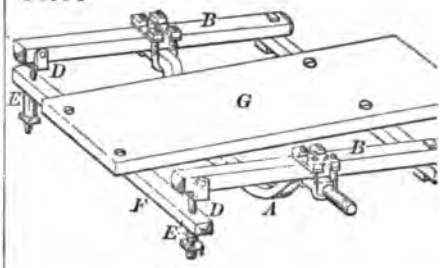

34137

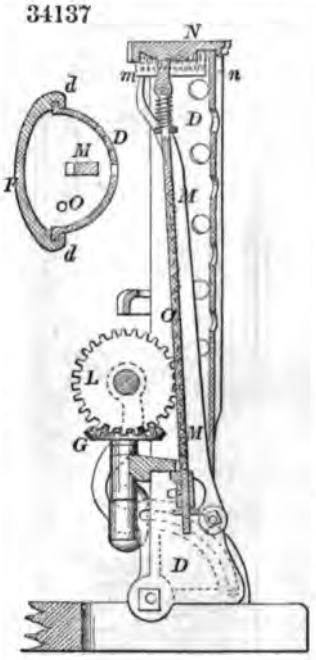

34138

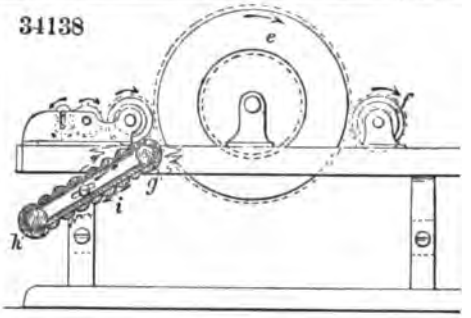

34139

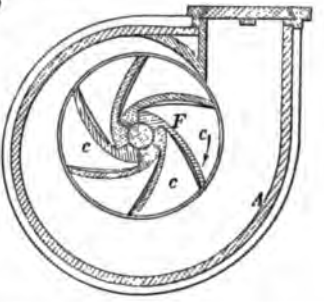

34141

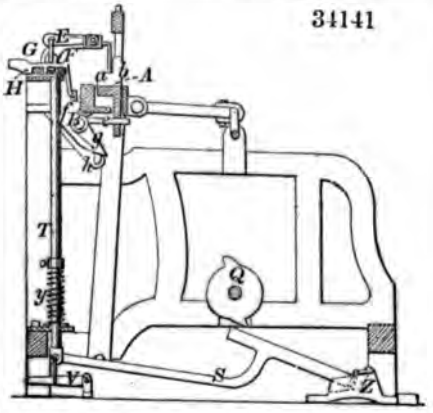

34140

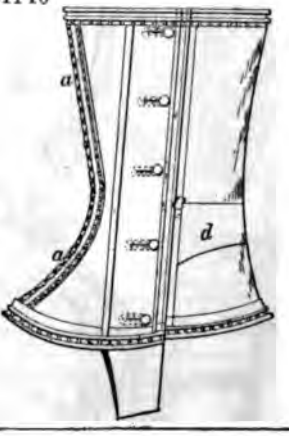

34142

34143

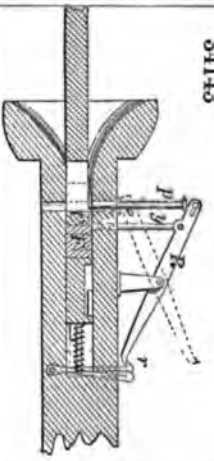

34148

34144

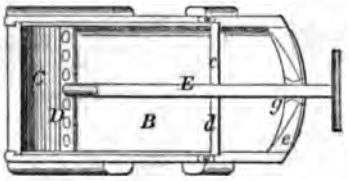

34147

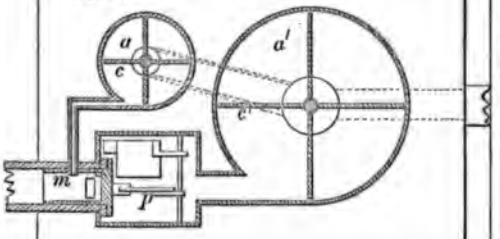

34145

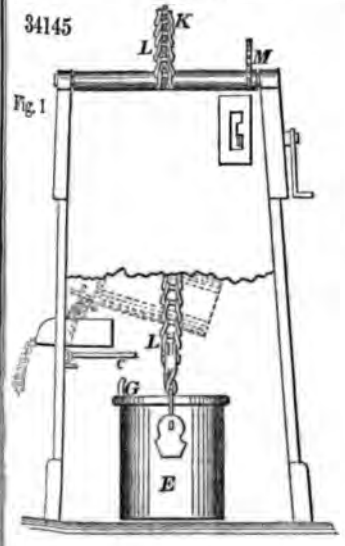

34149

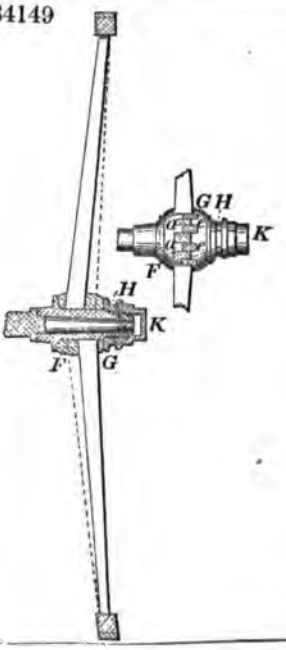

Fig. 2

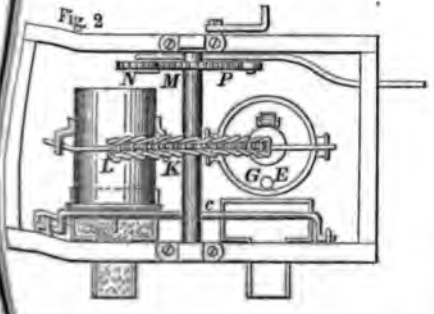

34150

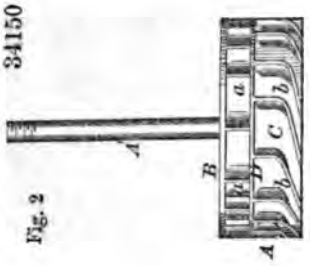

Fig. 2

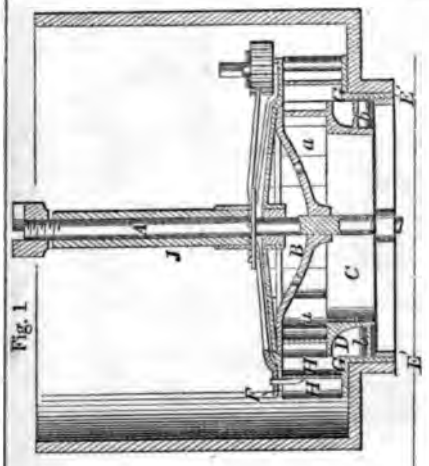

Fig. 1

34151

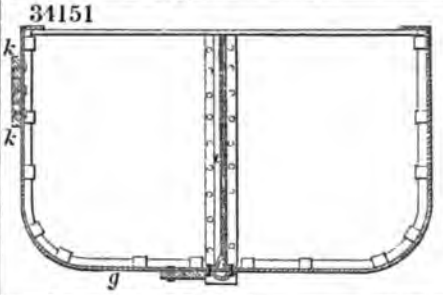

34152

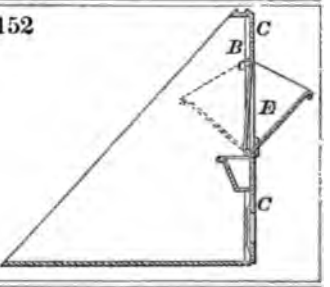

34154

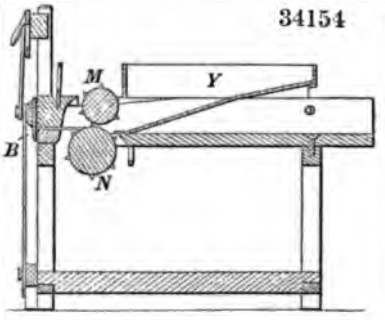

34153

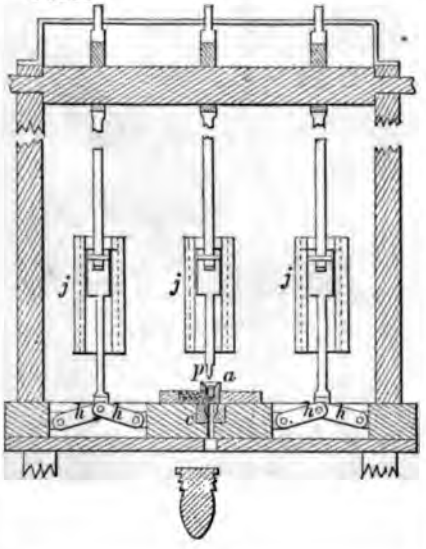

34155

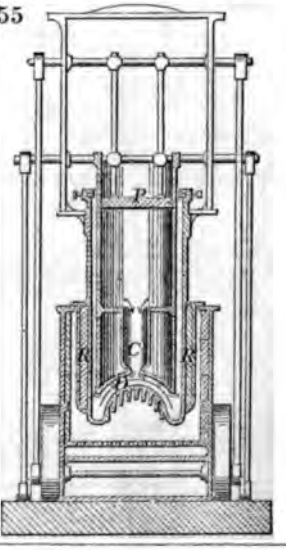

34156

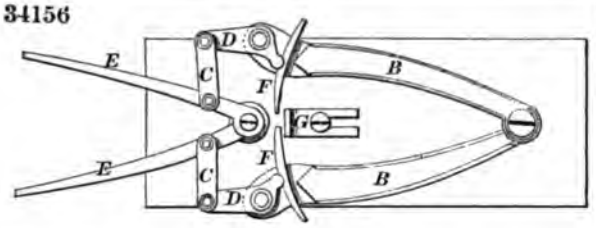

34157

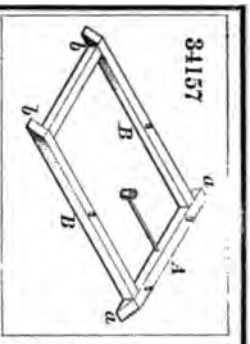

4158

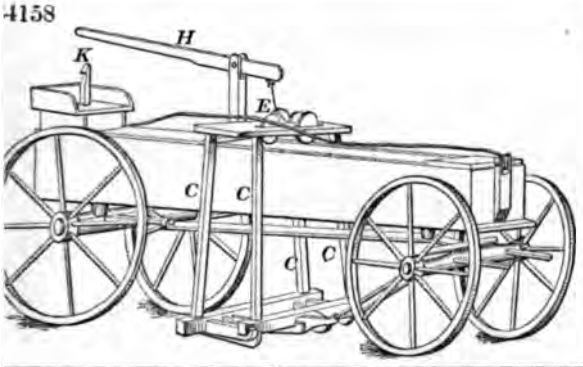

34159

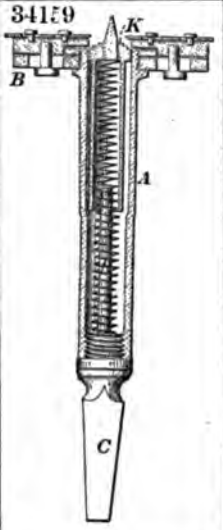

34163

Fig. 1.

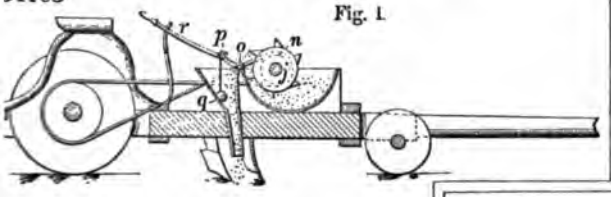

Fig. 2

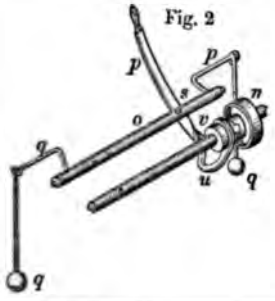

34160

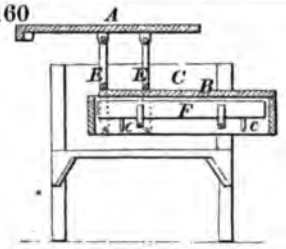

34161

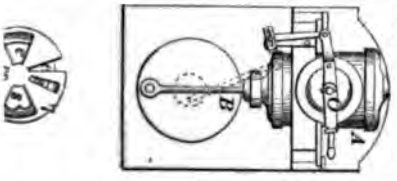

34162 Fig. 1 Fig. 2

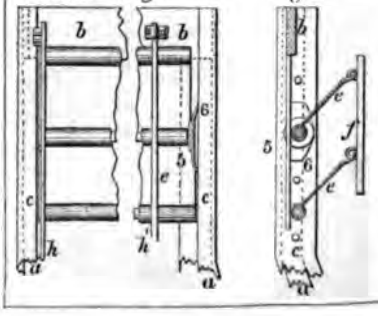

34164

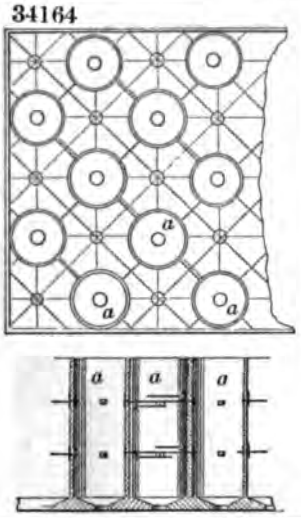

34165

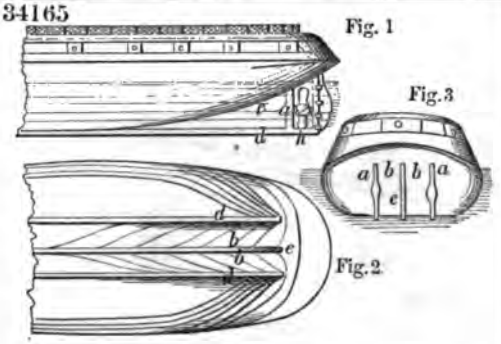

34166

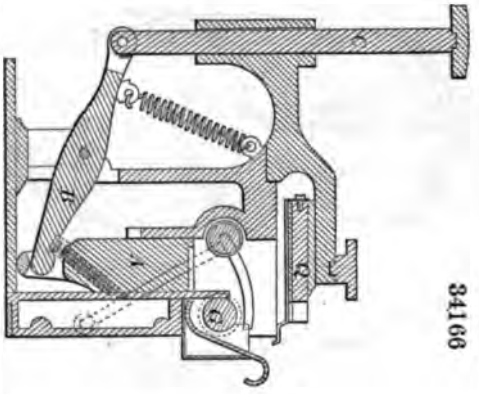

34167

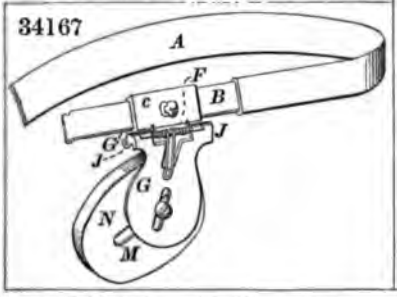

34168

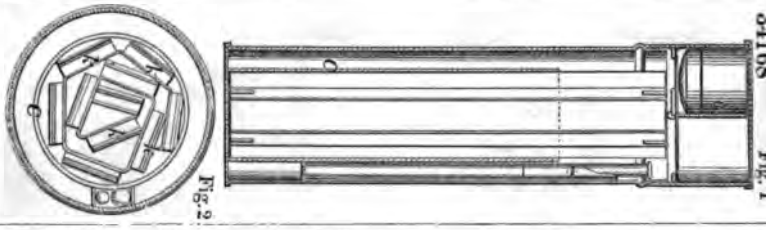

34169

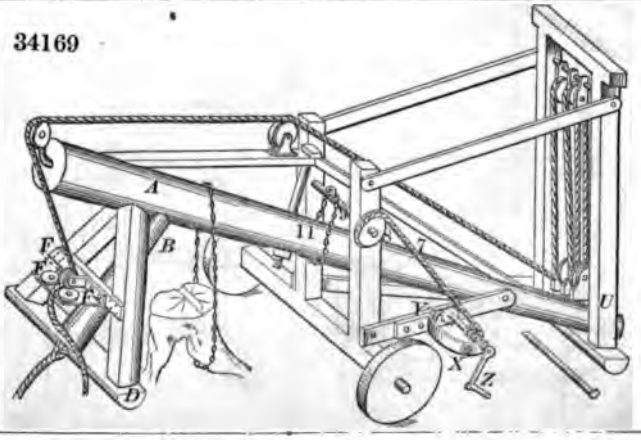

4170

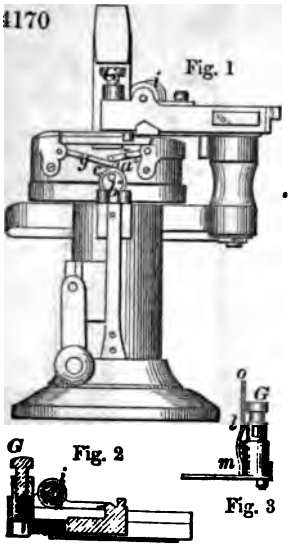

34173

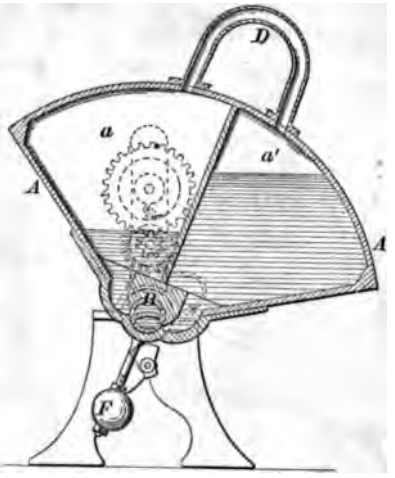

34171

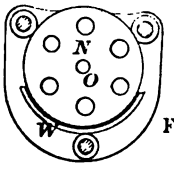

Fig. 2

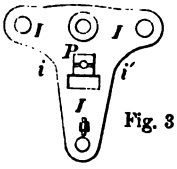

Fig. 3

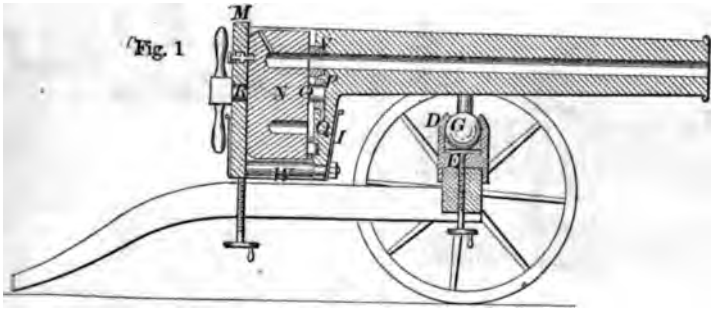

4172

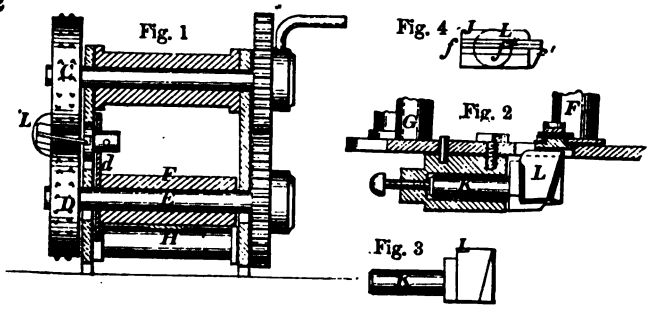

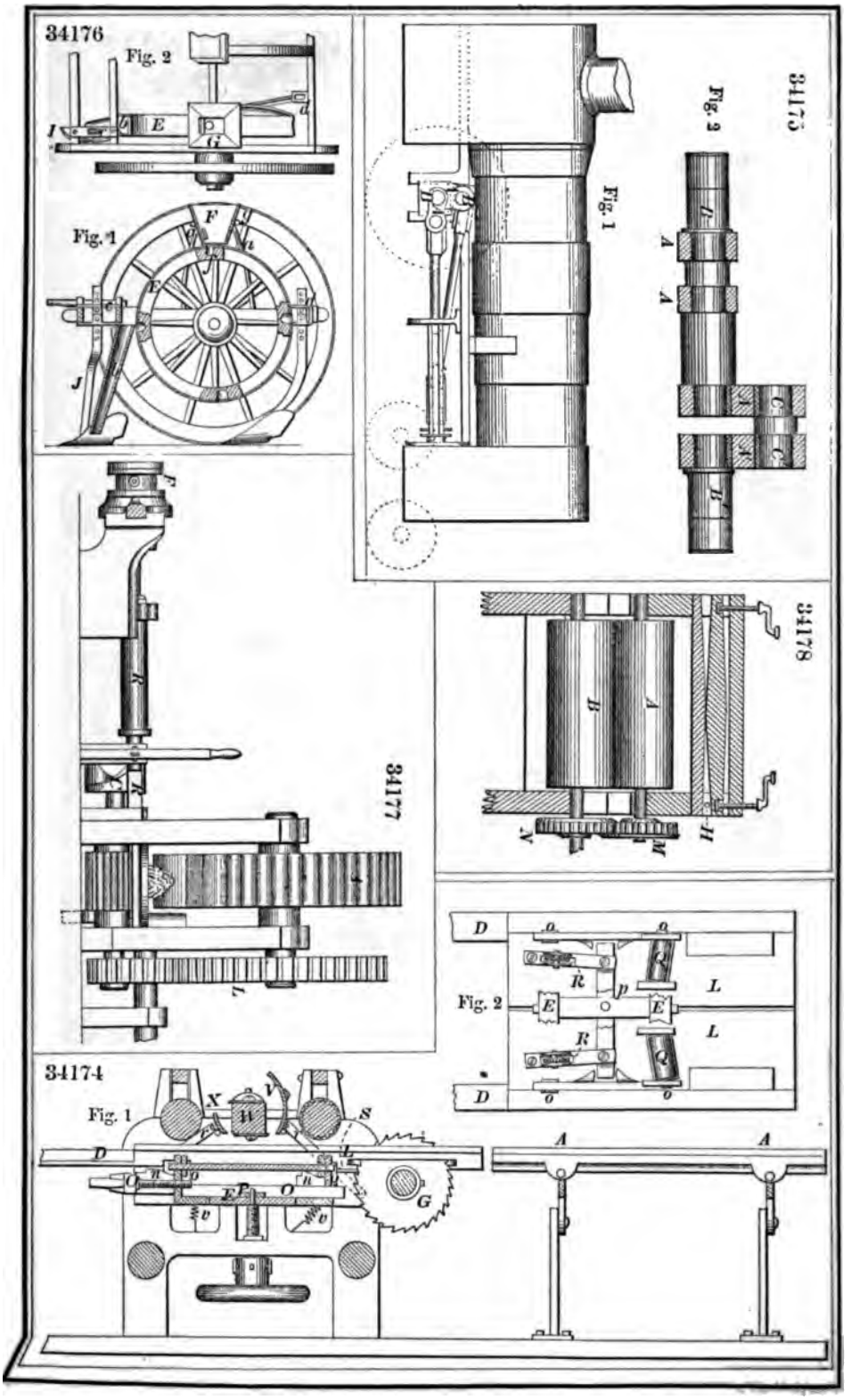
34175
Fig. 2
Fig. 1
34178
34177
34176
Fig. 2
Fig. 1
Fig. 2
34174
Fig. 1

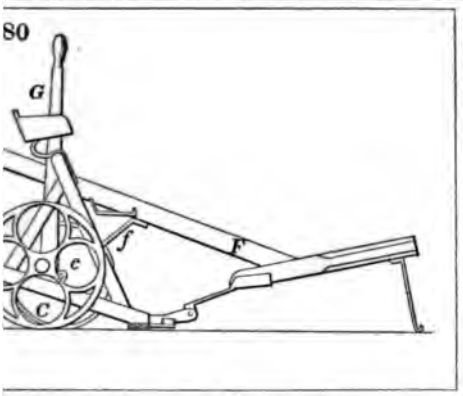
80
G
f
F
c
C

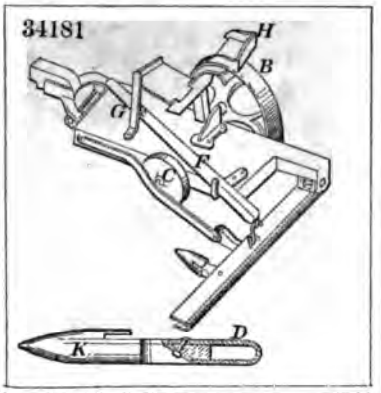
34181
H
B
G
F
C
D
K

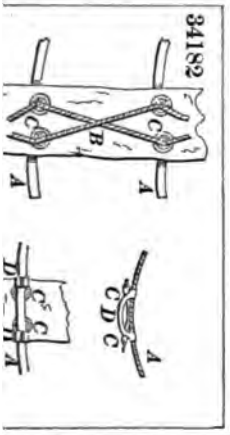
34182
C
B
A
A
C D C
A

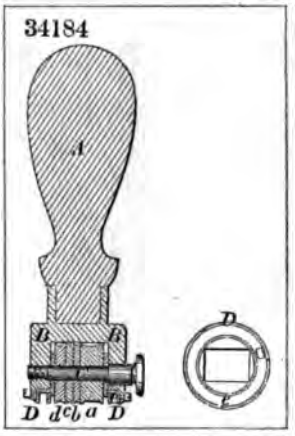
34184
A
B
B
D
D d c b a D
b

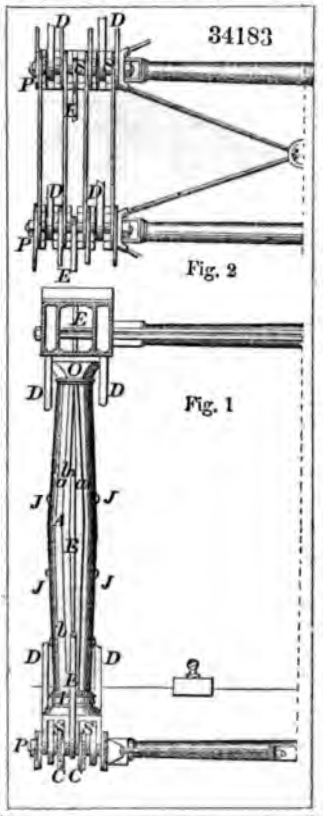
34183
D
D
P
E
D
D
P
E
Fig. 2
E
O
D
D
Fig. 1
b
J
J
A
B
J
J
b
D
D
B
P
S
S
C C

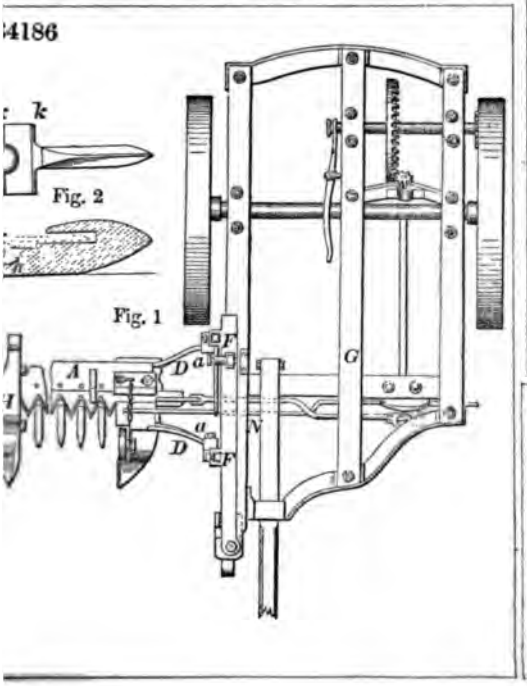
34186
k
Fig. 2
Fig. 1
F
D
a
A
a
D
F
N
G

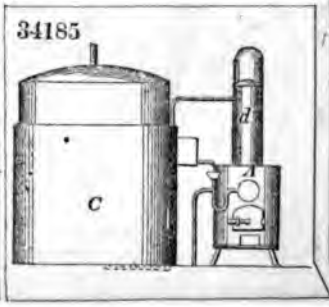
34185
d
C

34187

34189

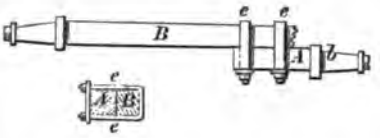

34190

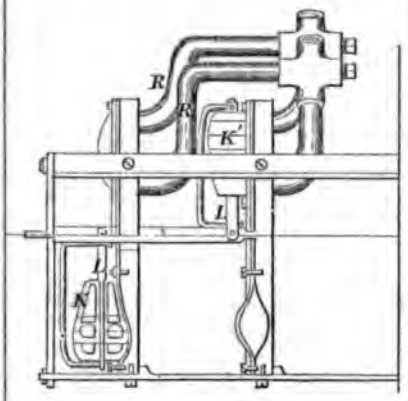

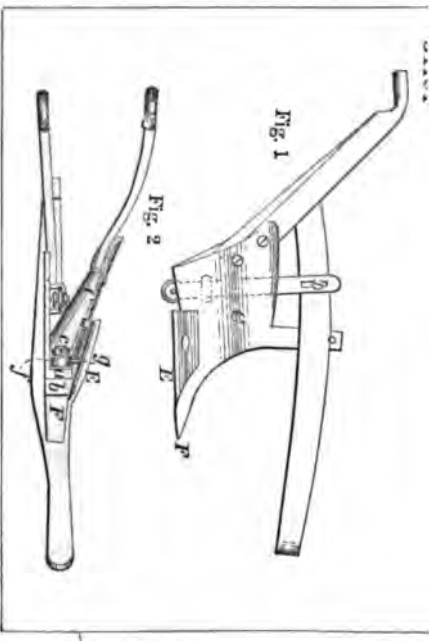

34193

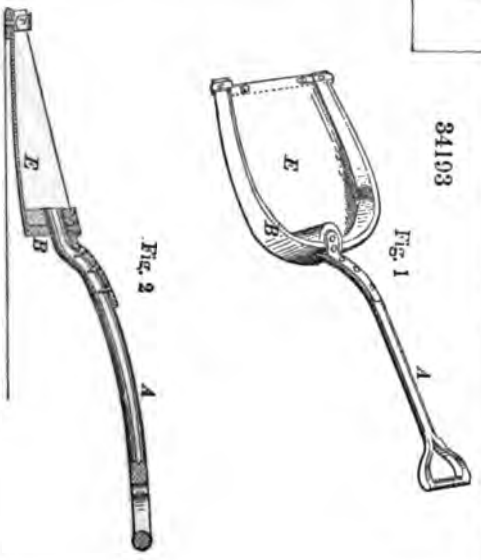

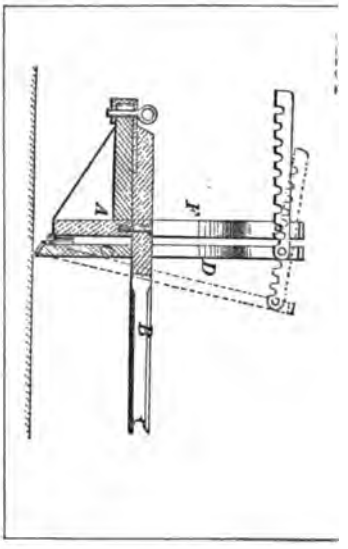

34195

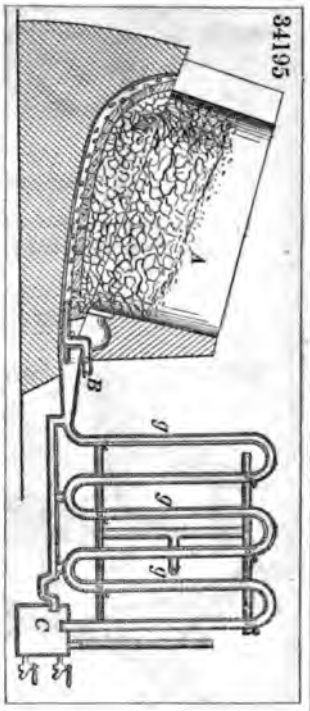

34197

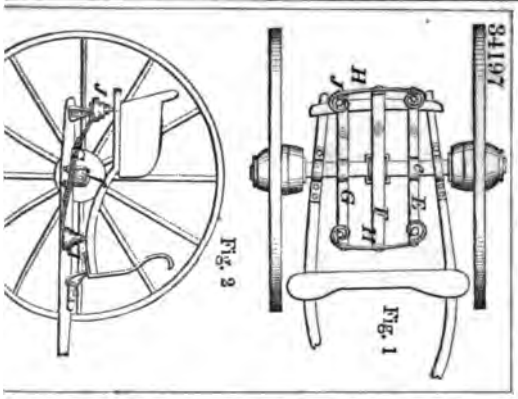

4198

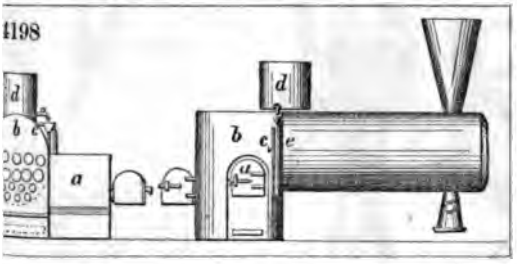

96

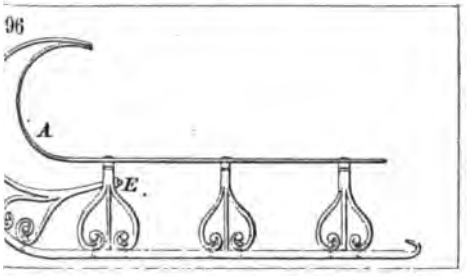

34200

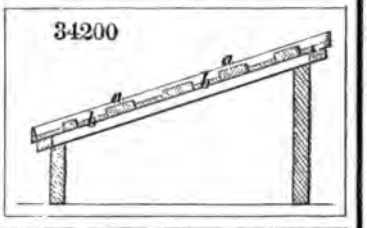

34199

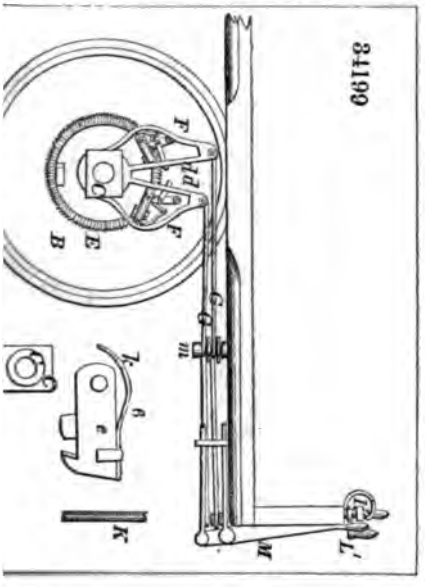

34201

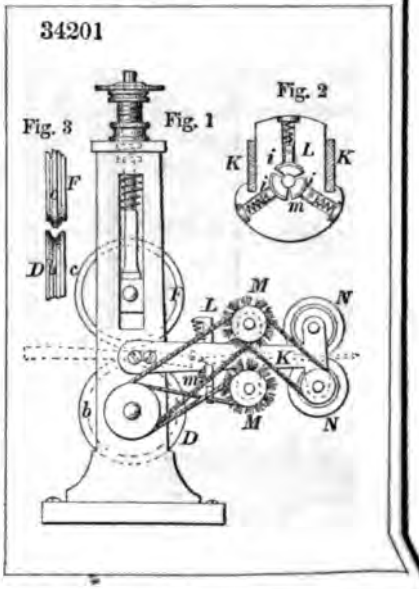

34202

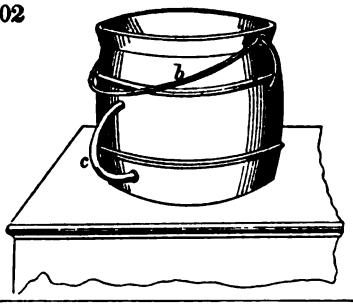

34205

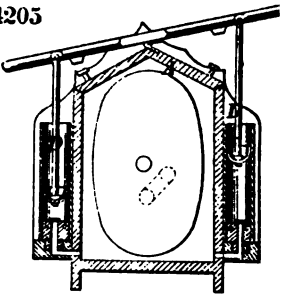

34204

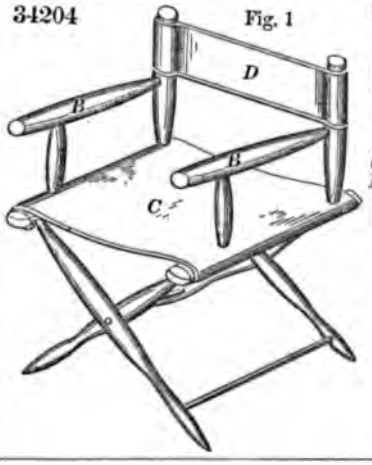

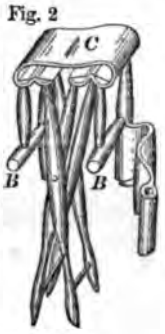

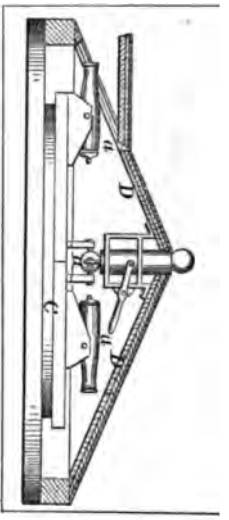

34209

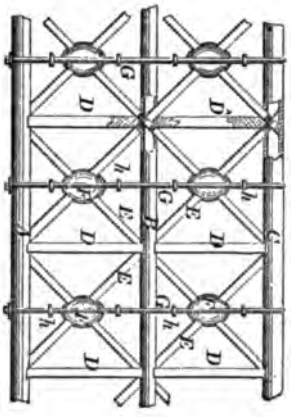

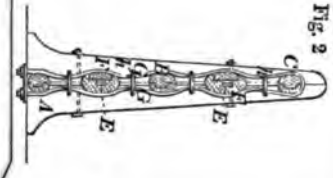

34208

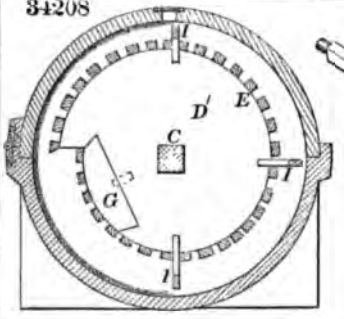

34203

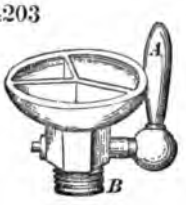

34207

34210

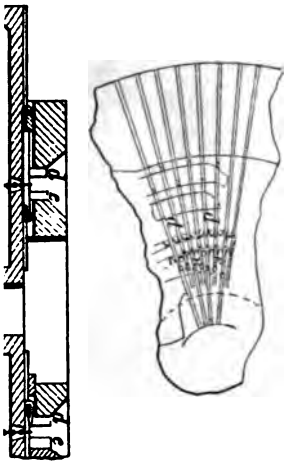

34212

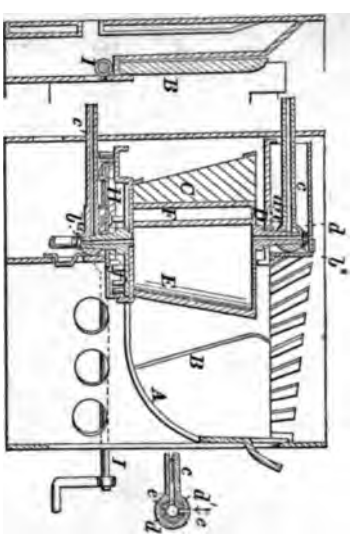

11

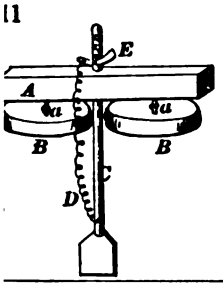

34213

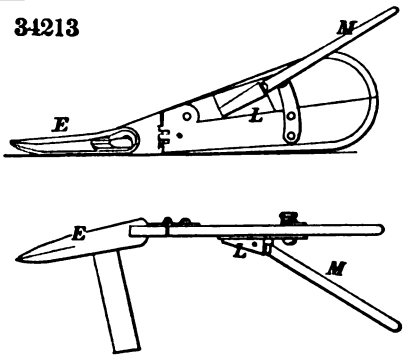

34215

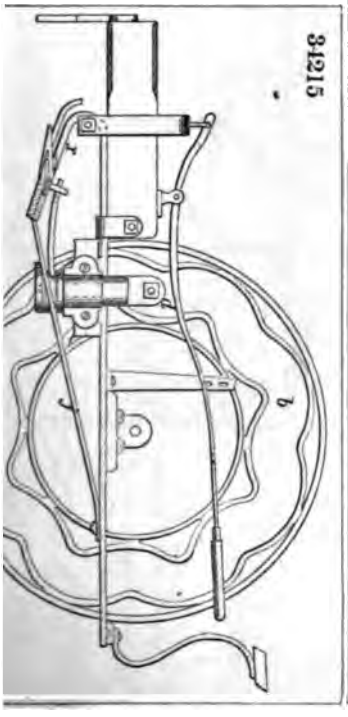

34214

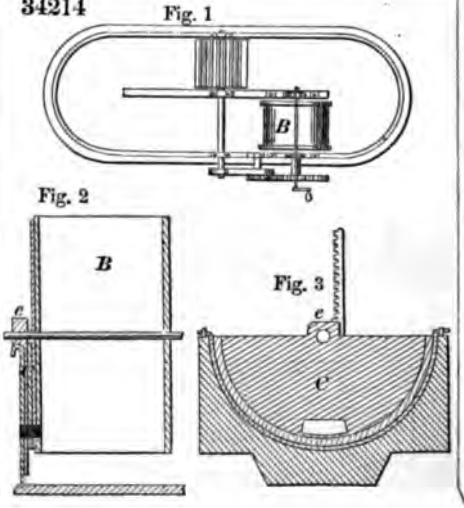

34216

34217

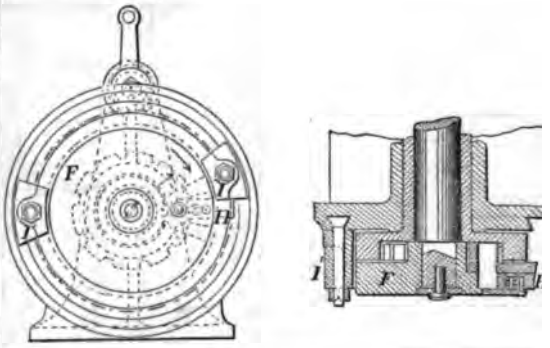

34218

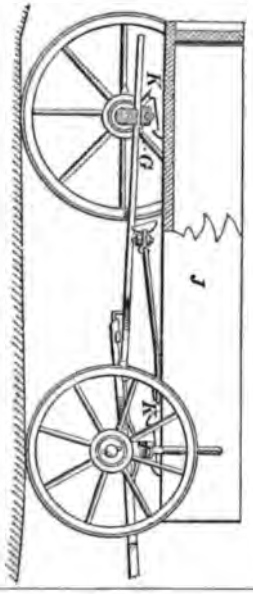

34219

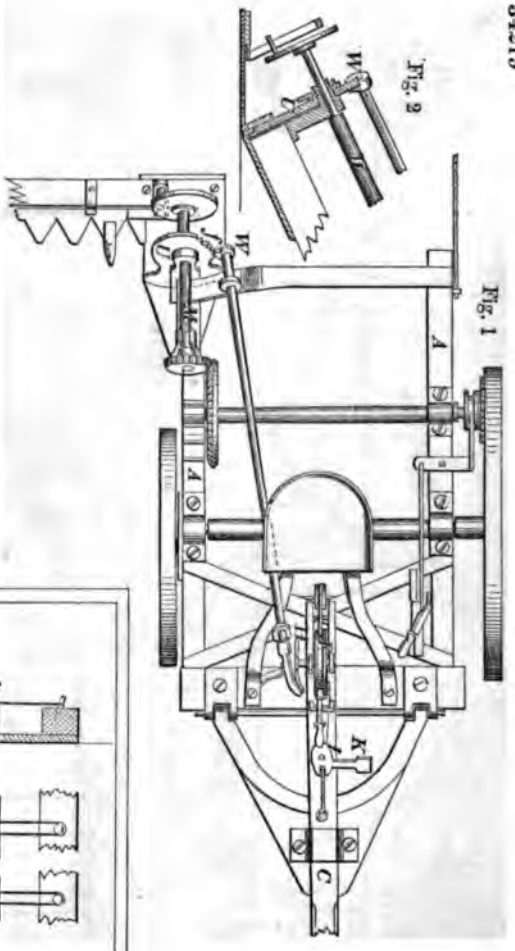

34220

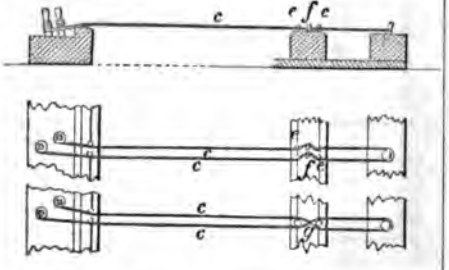

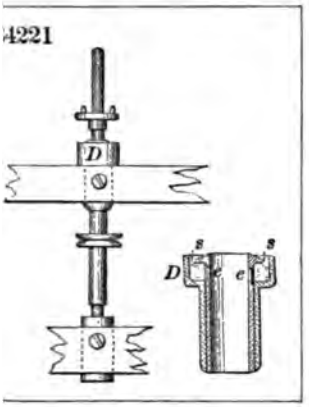
4221
D
D
s
s
c
c

34223
c
p
p
p
p

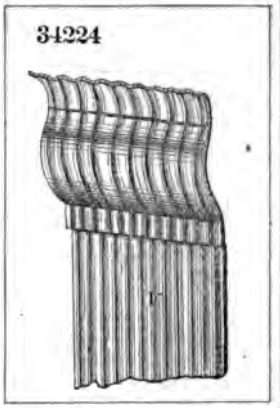
34224

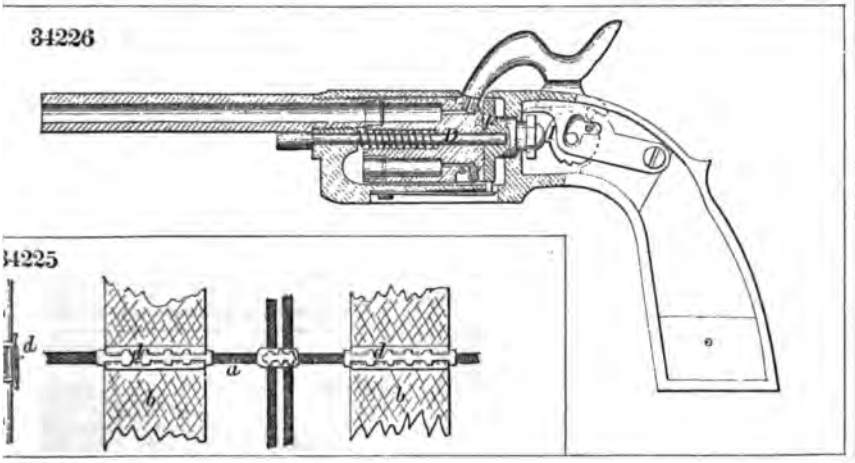
34226
D
34225
d
d
d
a
b
b

227
W
d
d
W
d
d
W
d
d
G

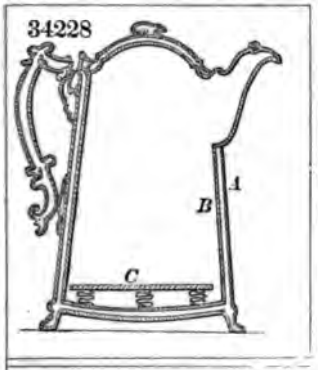
34228
A
B
C

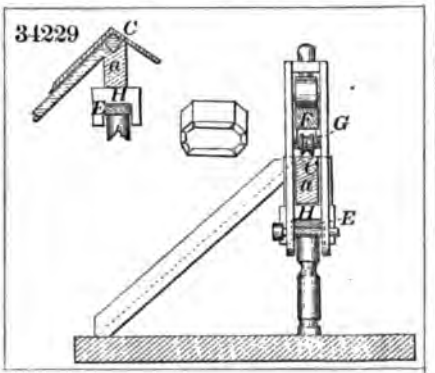
34229
C
a
H
E
G
E
a
H
E

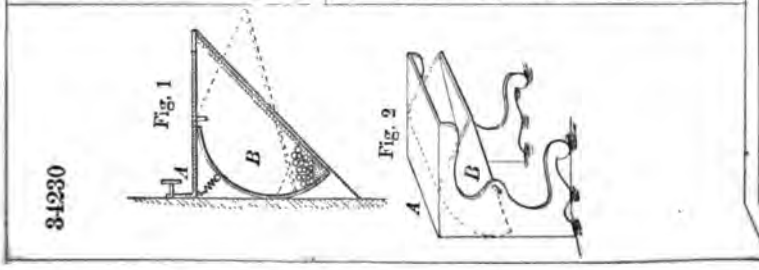
34230
Fig. 1
A
B
Fig. 2
A
B

34231

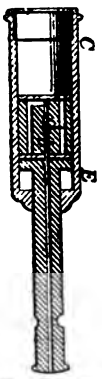

34234

Fig. 1

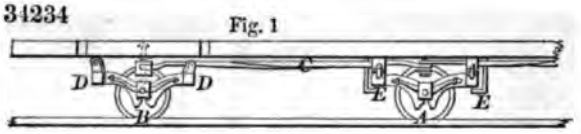

Fig. 2

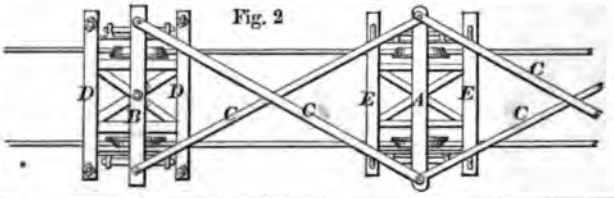

34235

34236

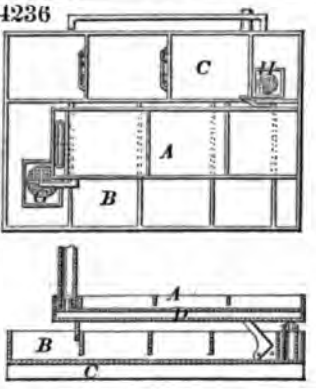

34237

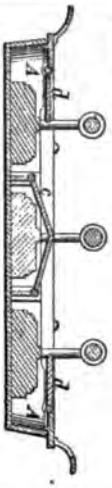

34240

Fig. 2

Fig. 1

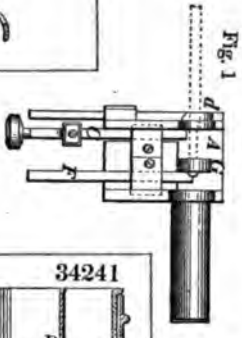

34238

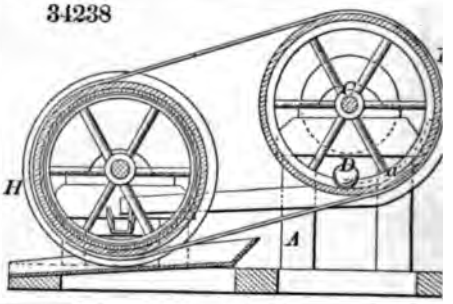

34239

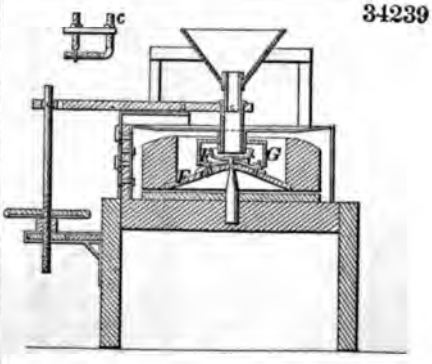

34241

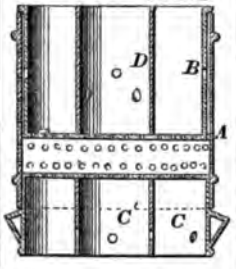

34242

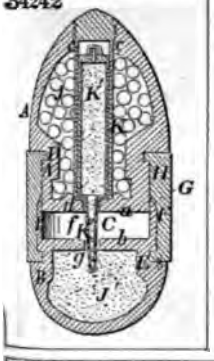

34243

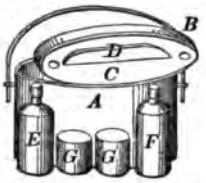

34244

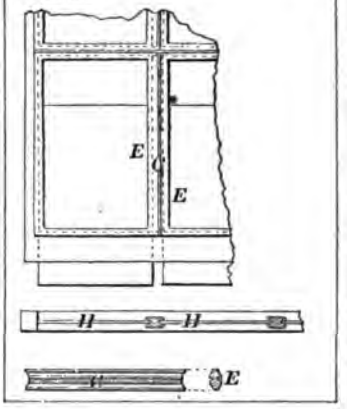

34245

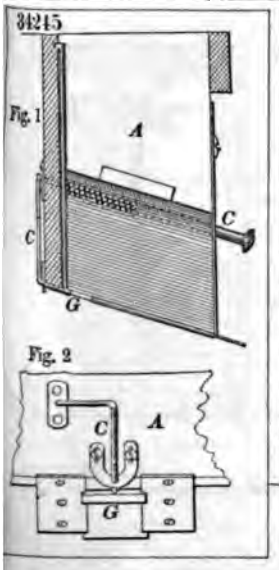

34249

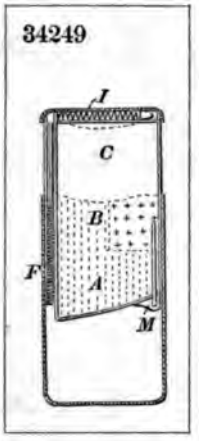

34246

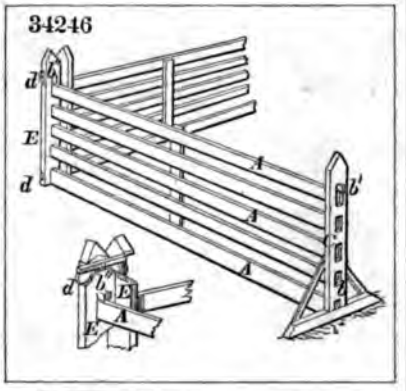

34248

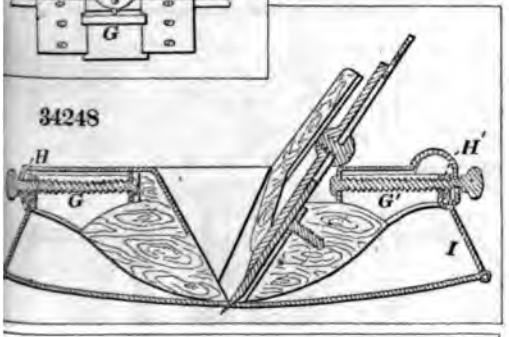

34247

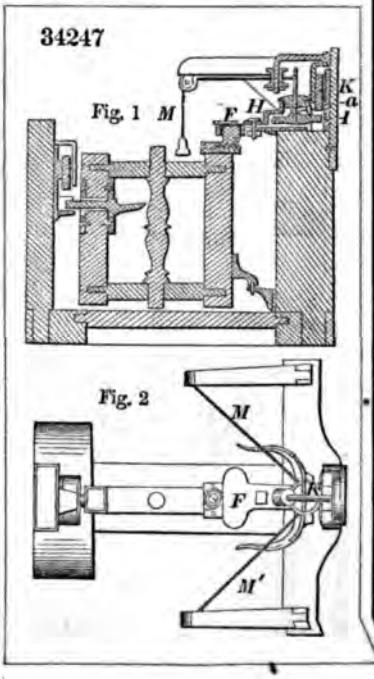

34250

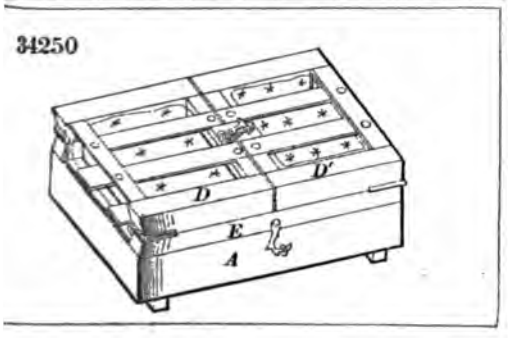

34252

34253

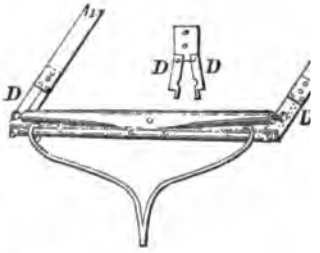

34254

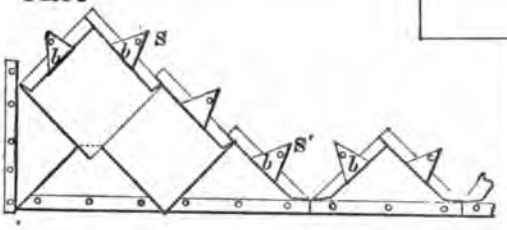

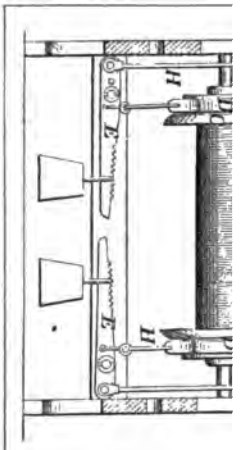

34256

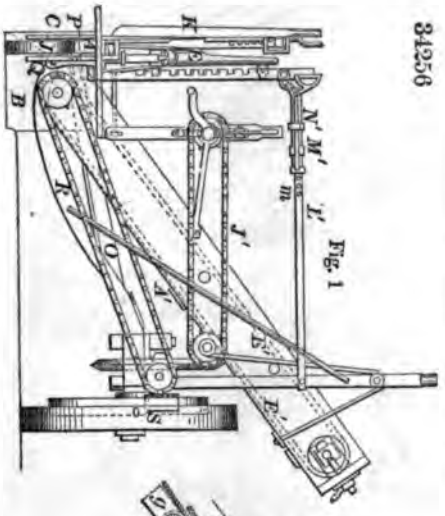

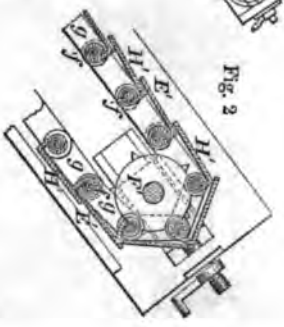

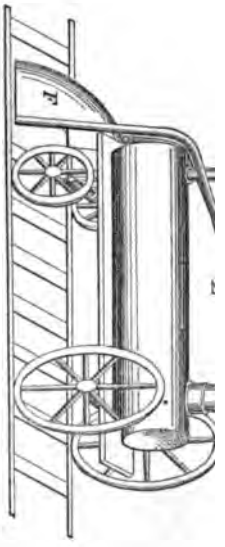

258

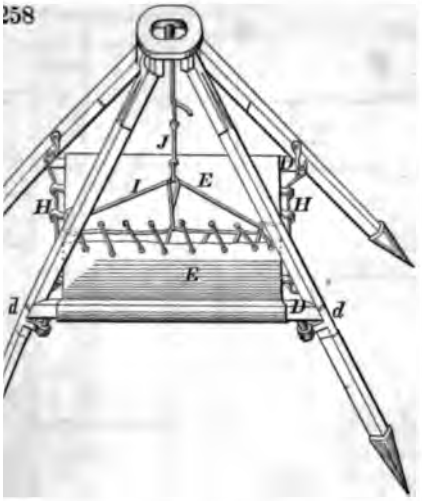

34259

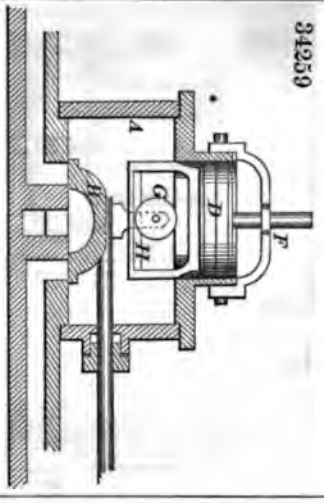

261

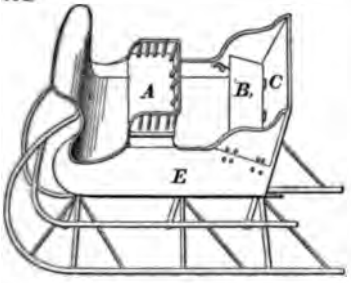

34260

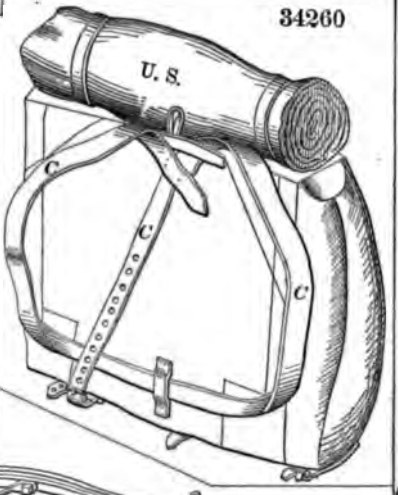

262

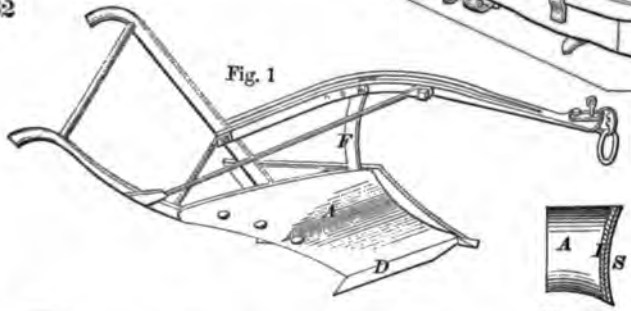

Fig. 3

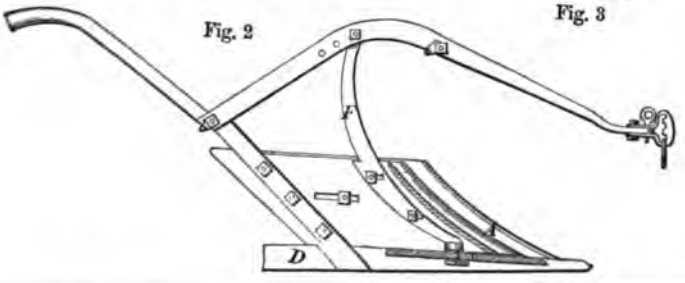

34263

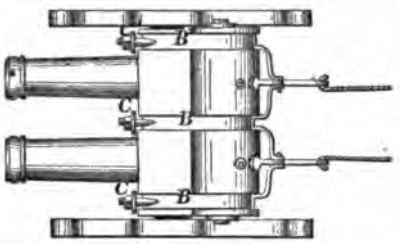

34265

Fig. 1

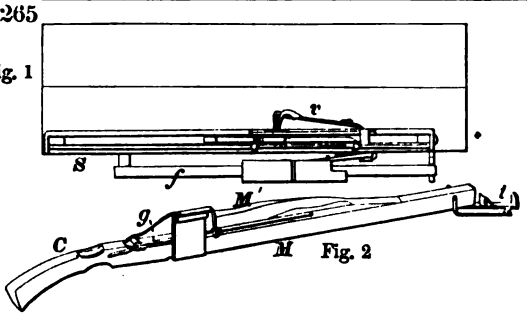

Fig. 2

34267

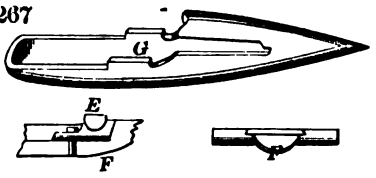

34268

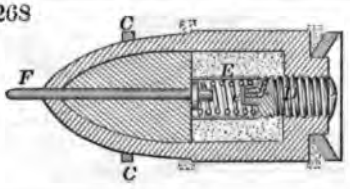

34269

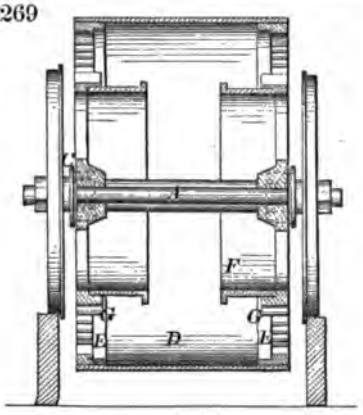

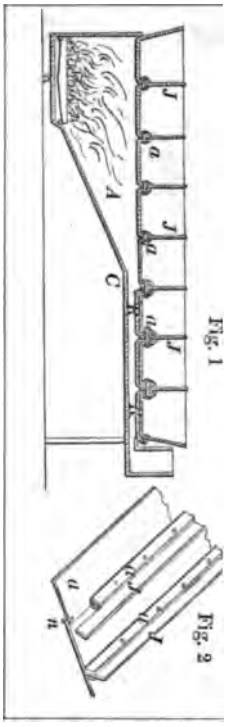

Fig. 1

Fig. 2

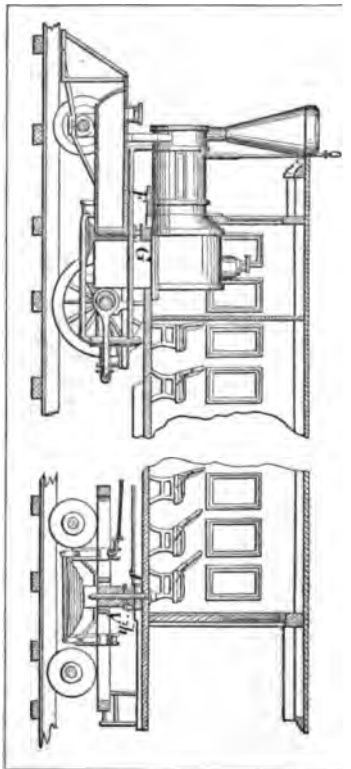

271

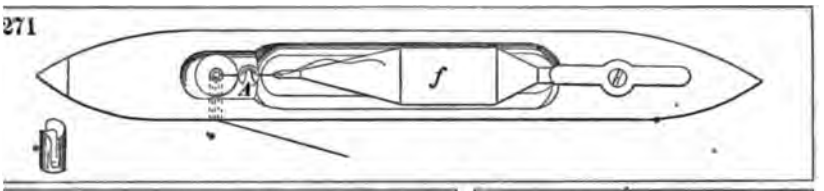

2

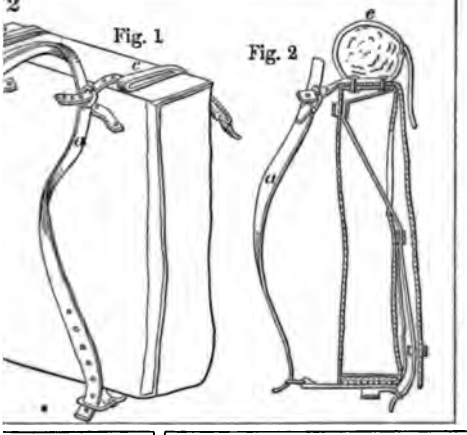

34273

74

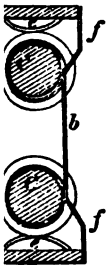

34275

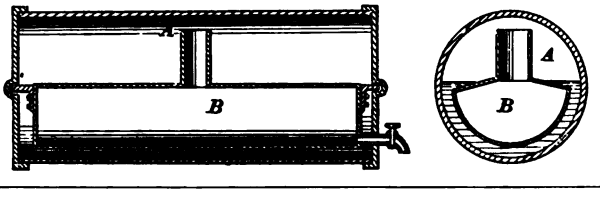

34276

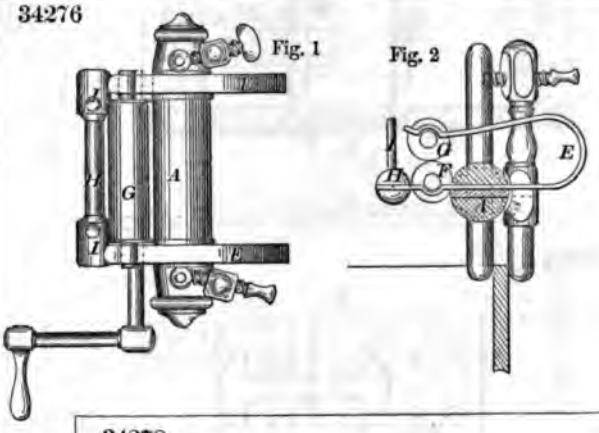

77

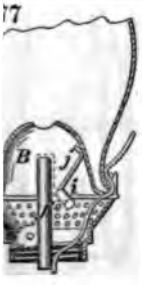

34278

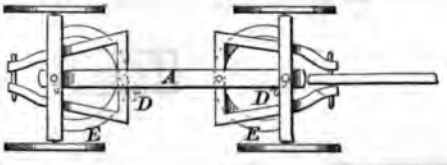

34279

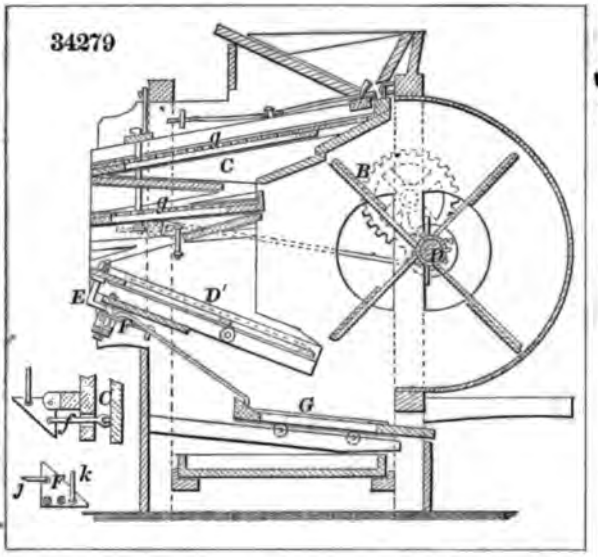

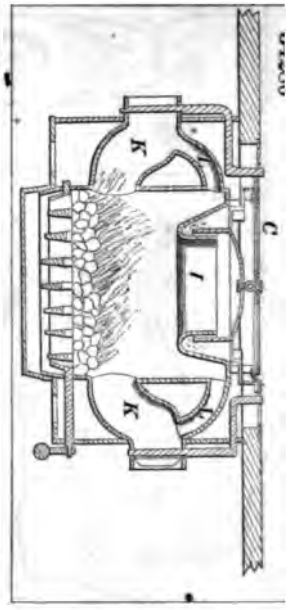

34282

Fig. 1

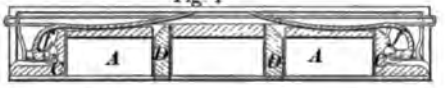

Fig. 2

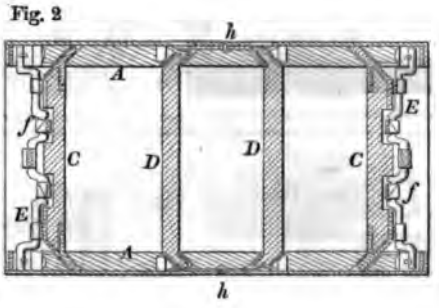

34281

Fig. 1

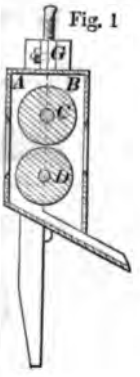

Fig. 2

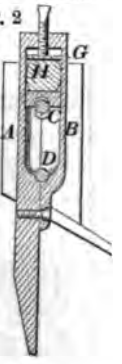

34284

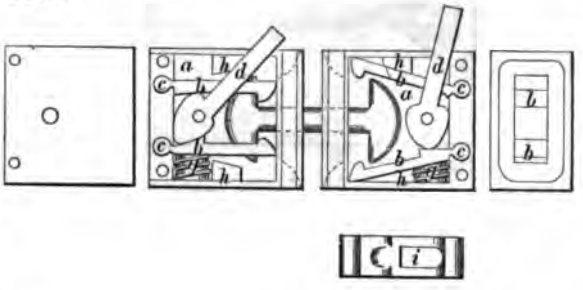

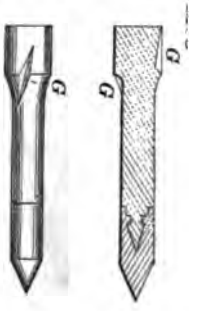

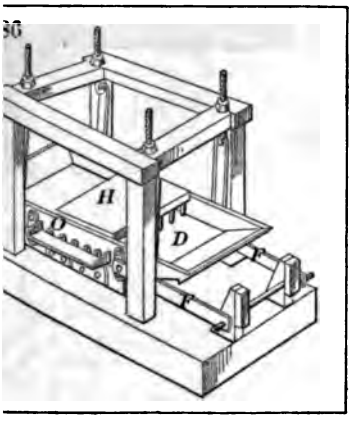

34288

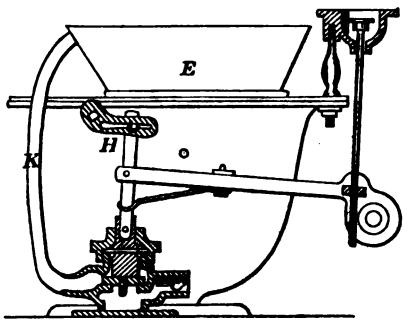

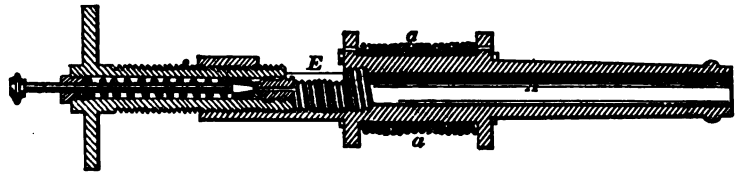

34289

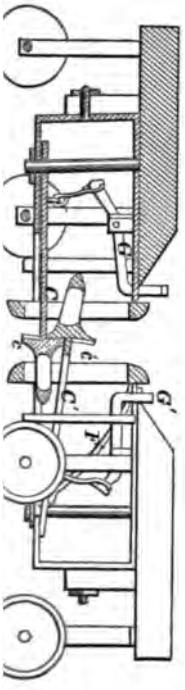

34290

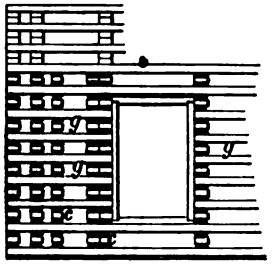

34291

Fig. 1

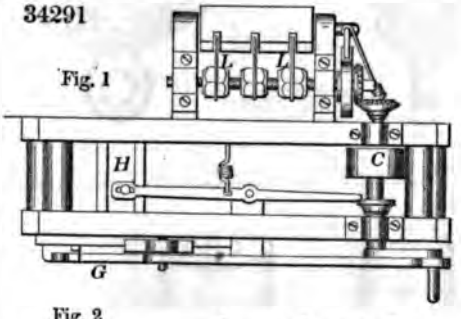

Fig. 2

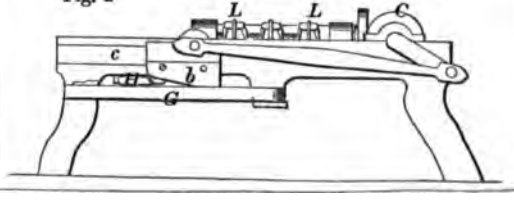

34292

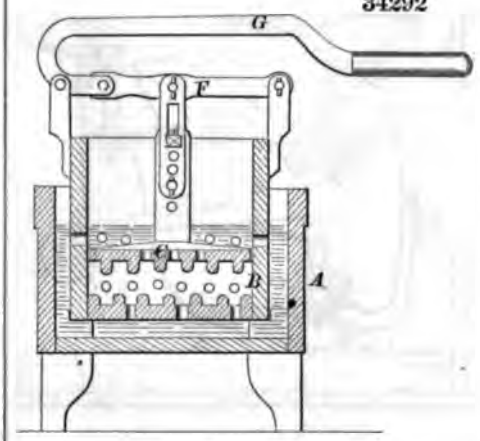

34290

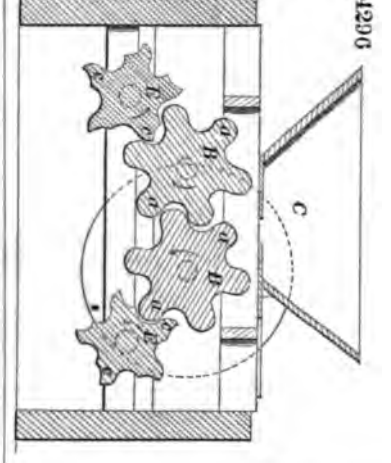

34295

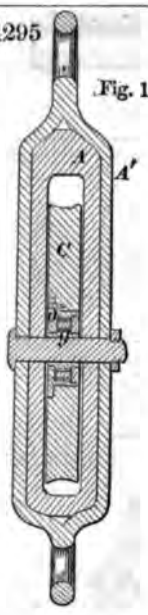

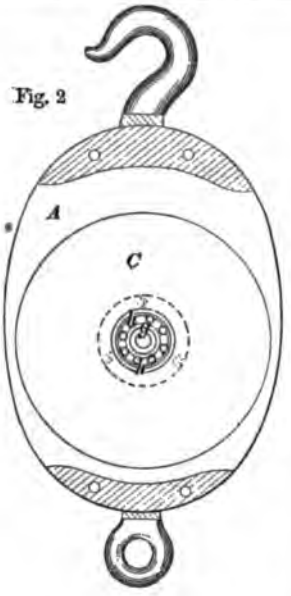

34293

34297

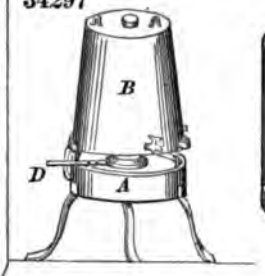

34299

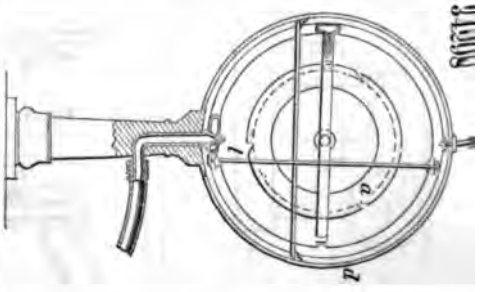

34299

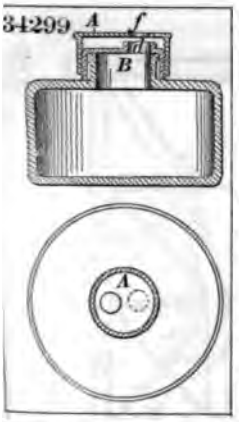

34300

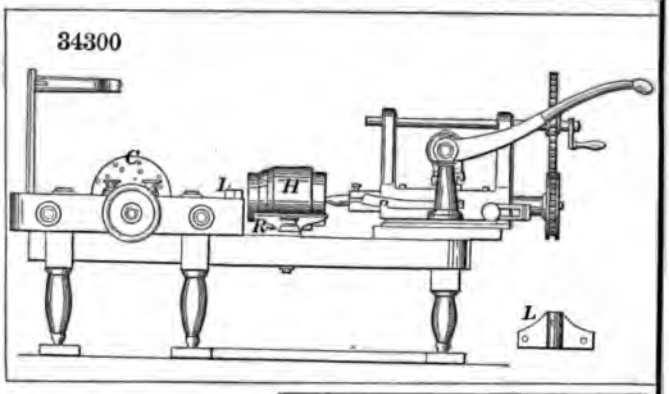

34301

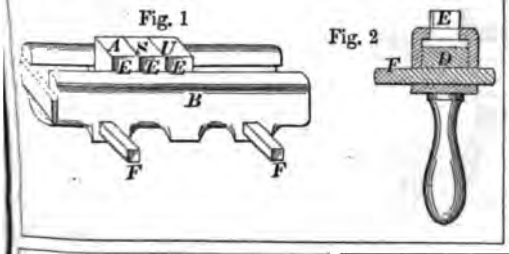

34302

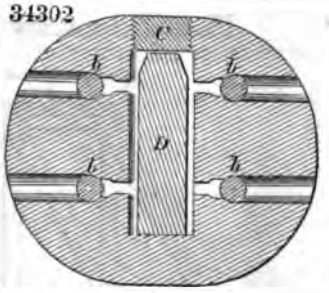

34305

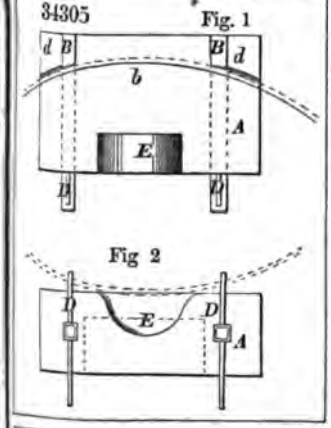

34303

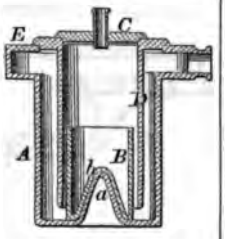

34304

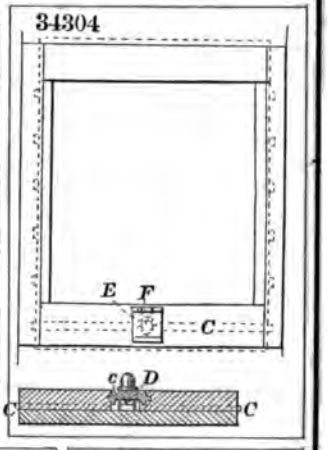

34306

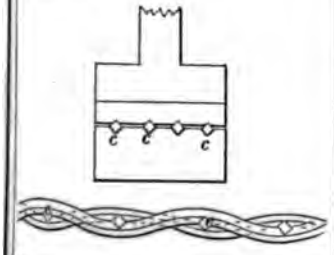

34307

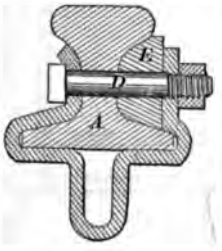

34308

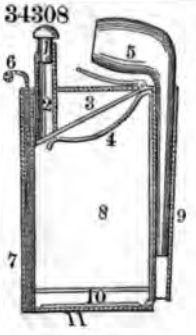

34310

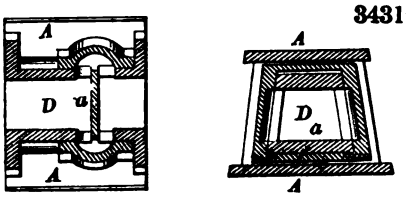

34312

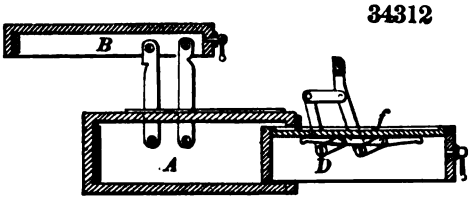

34313

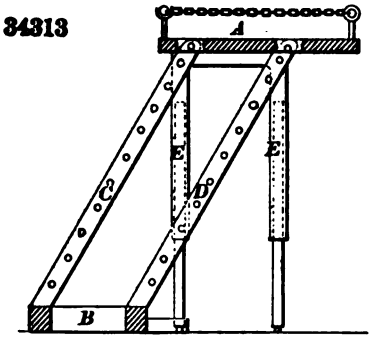

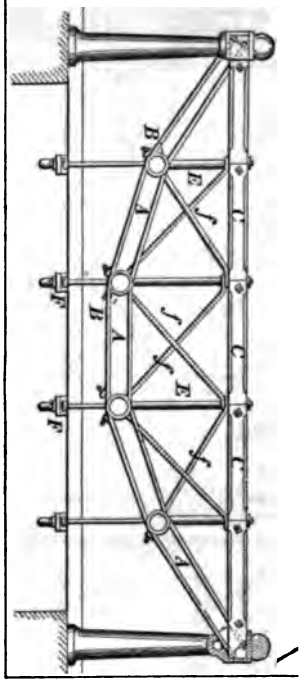

34314

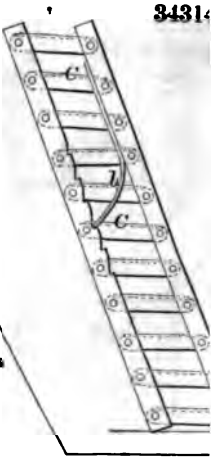

34316

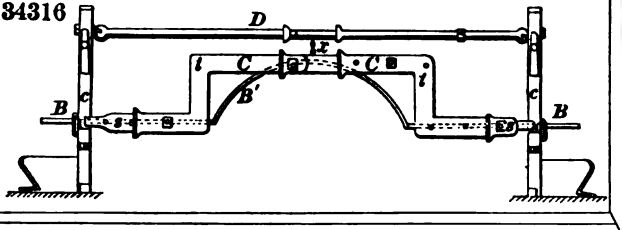

34315

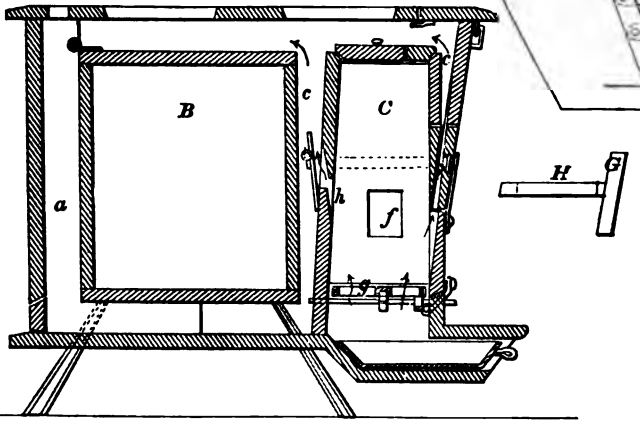

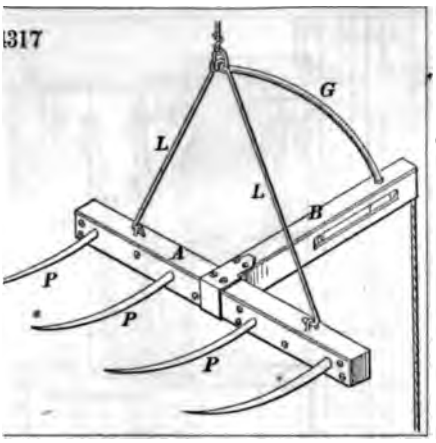
317
G
L
L
B
A
P
P
P

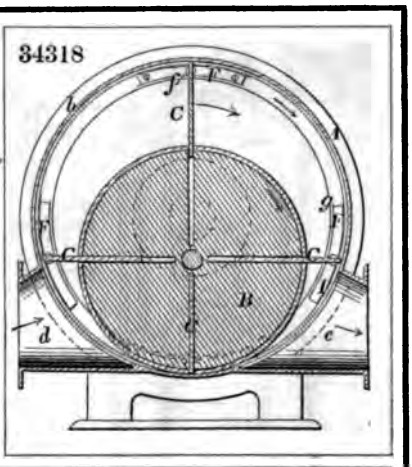
34318
C
C
C
B
d
e

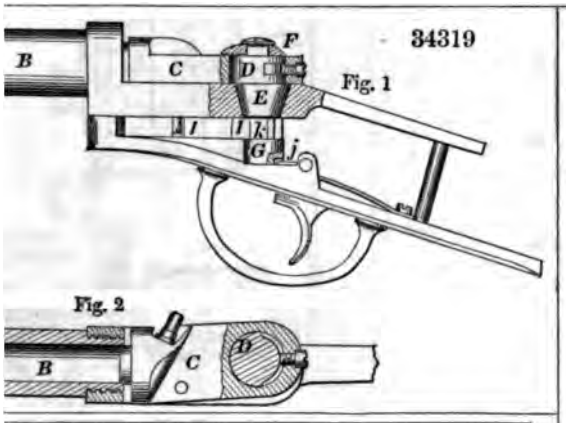
34319
Fig. 1
B
C
D
E
F
G
j
Fig. 2
B
C
D

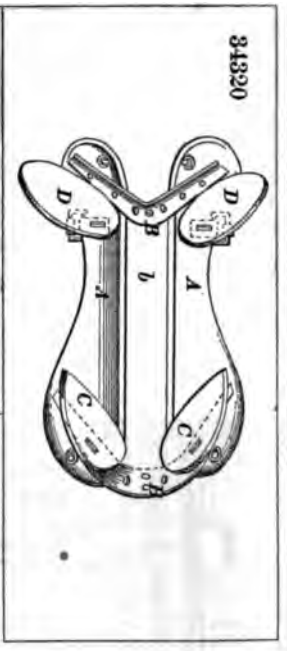
34320
D
D
B
A
C
C

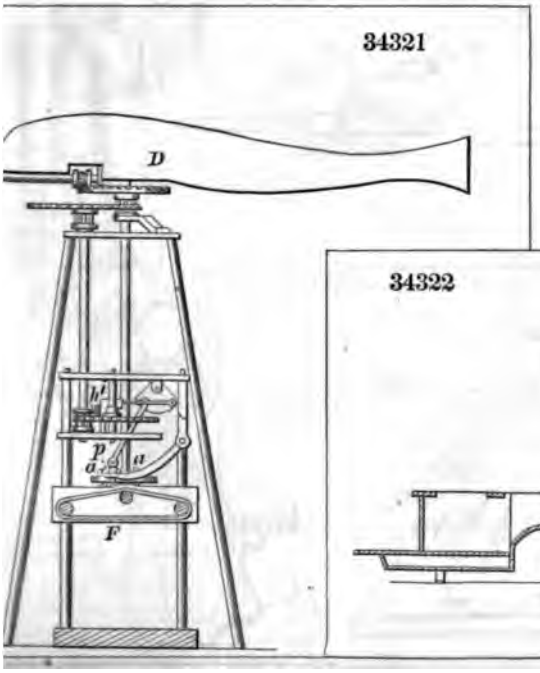
34321
D
F

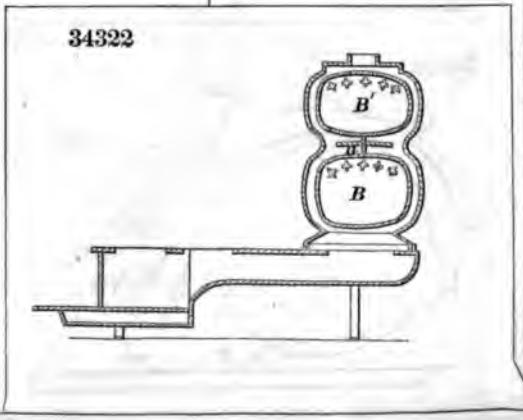
34322
B'
B

34323

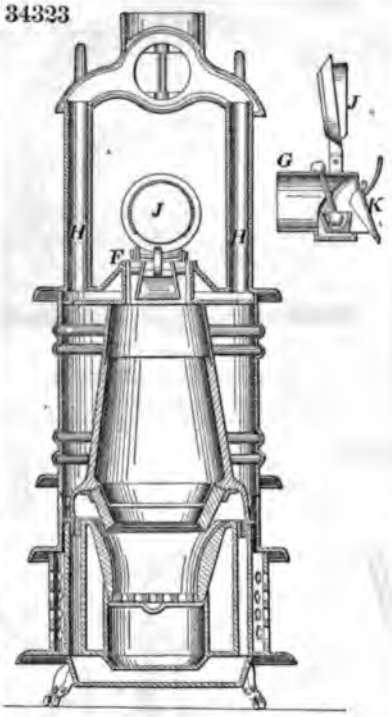

34321

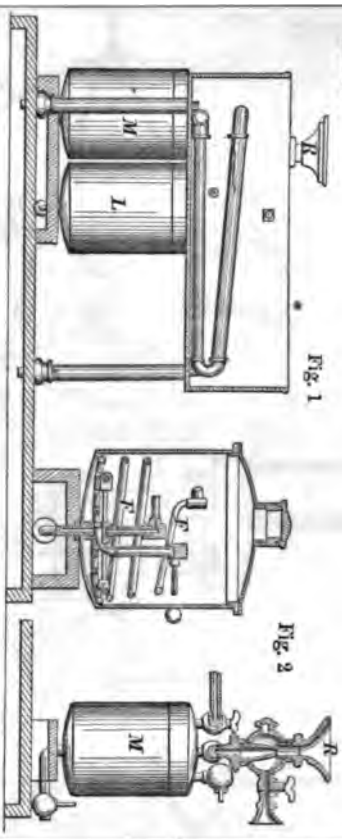

34327

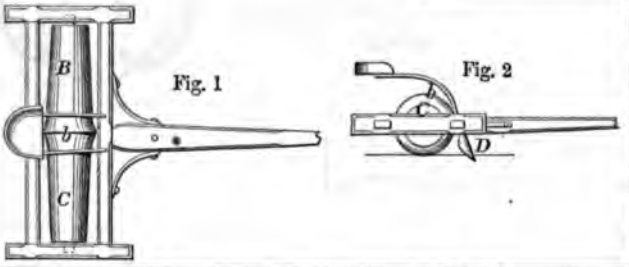

34325

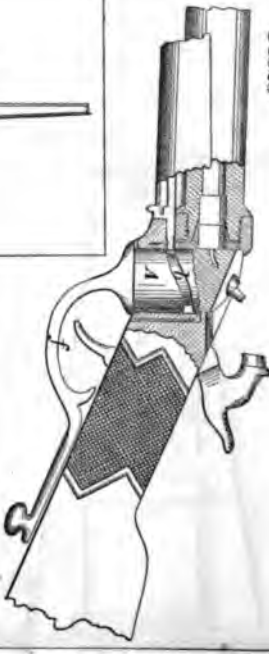

34326

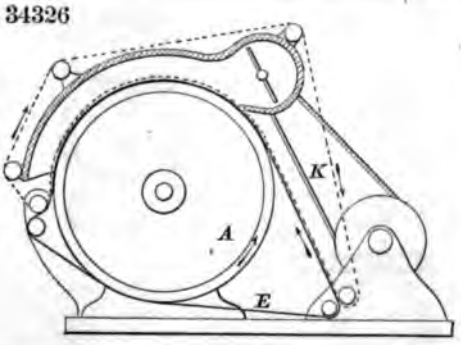

34328

34329

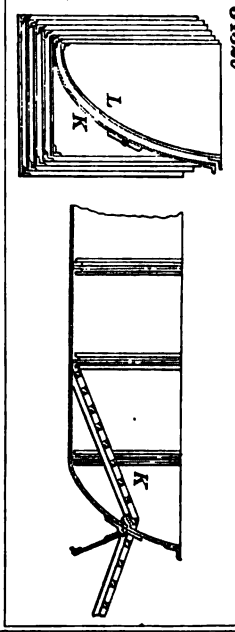

34331

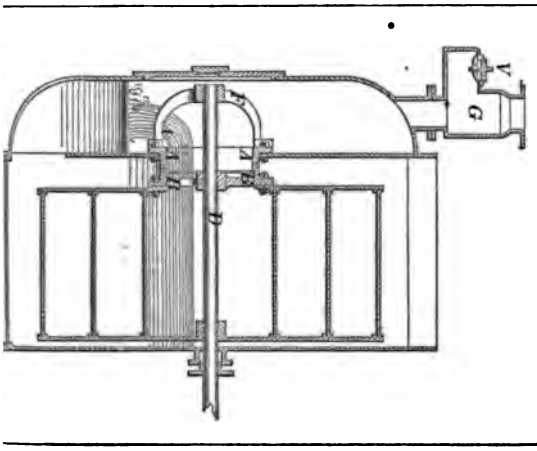

34330

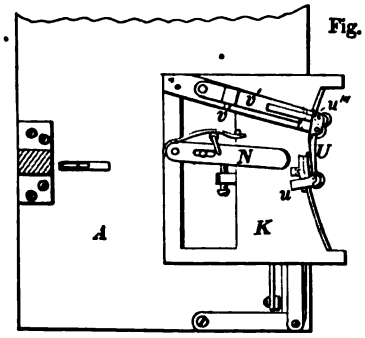

Fig. 1

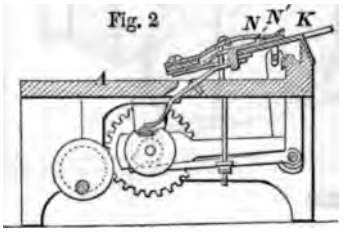

Fig. 2

34332

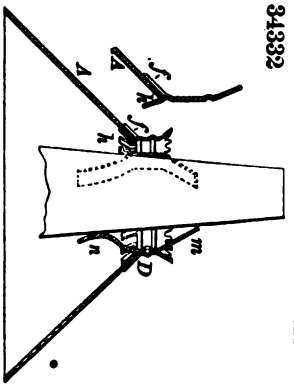

34333

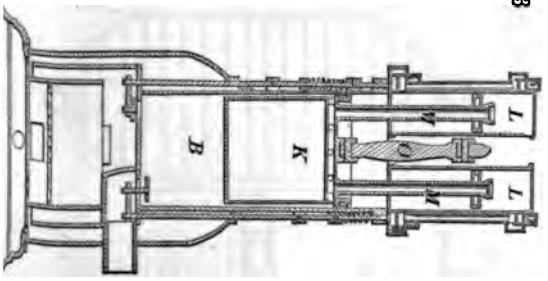

34334

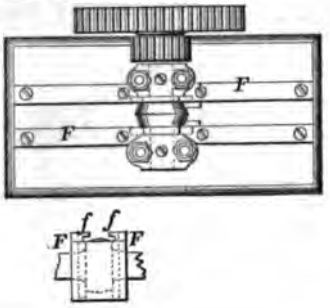

34335

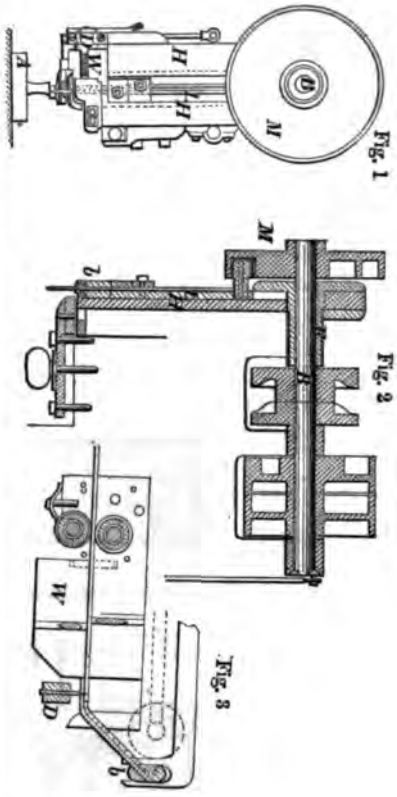

34336

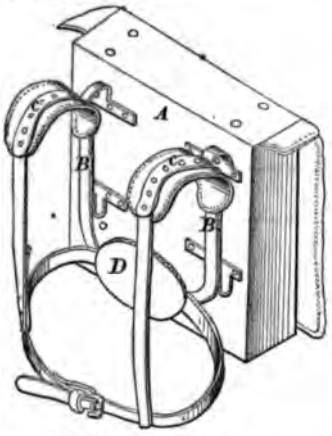

34338

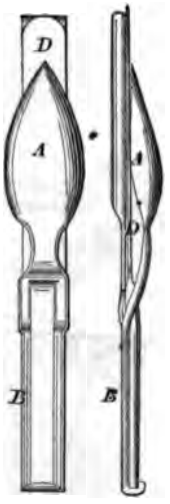

34337

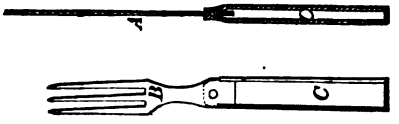

34339

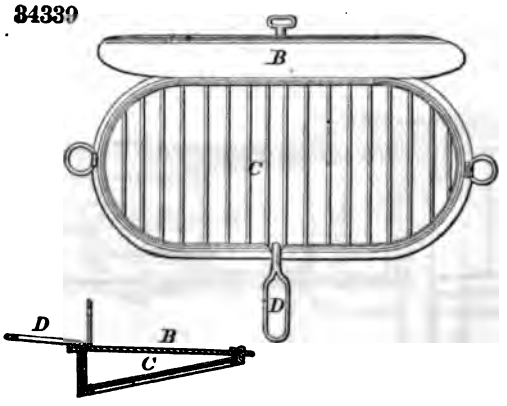

340

Fig. 1

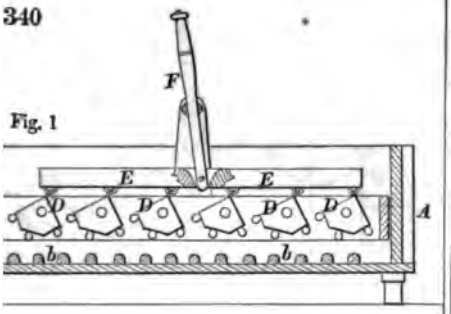

Fig. 2

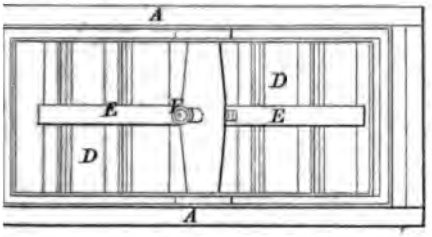

34342

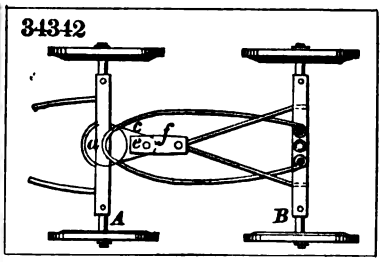

34343

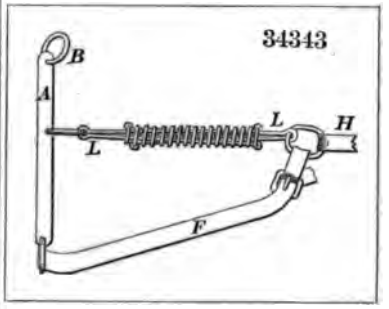

34344

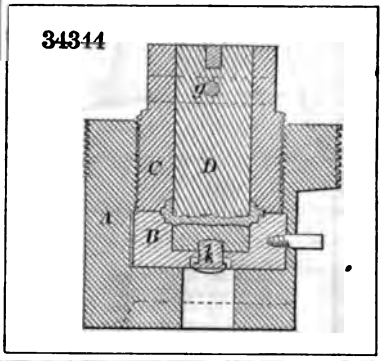

34341

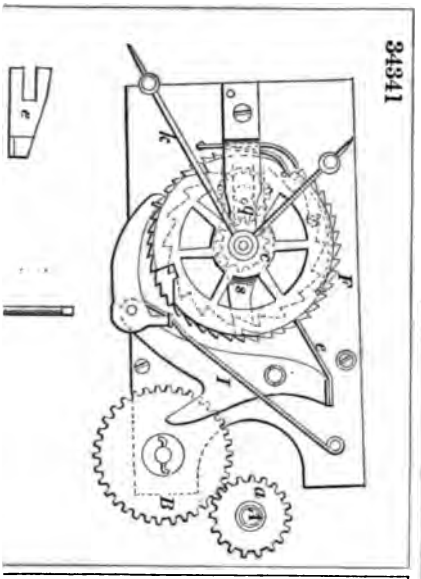

34346

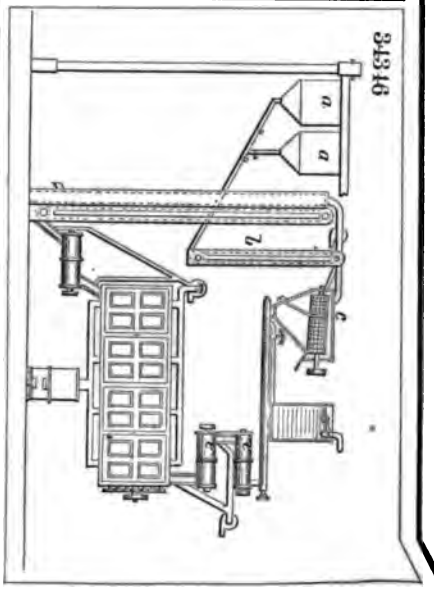

4345

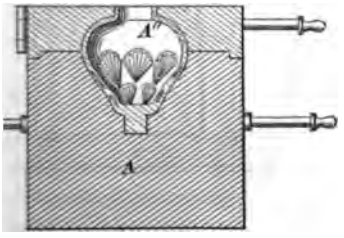

34347

Fig. 1

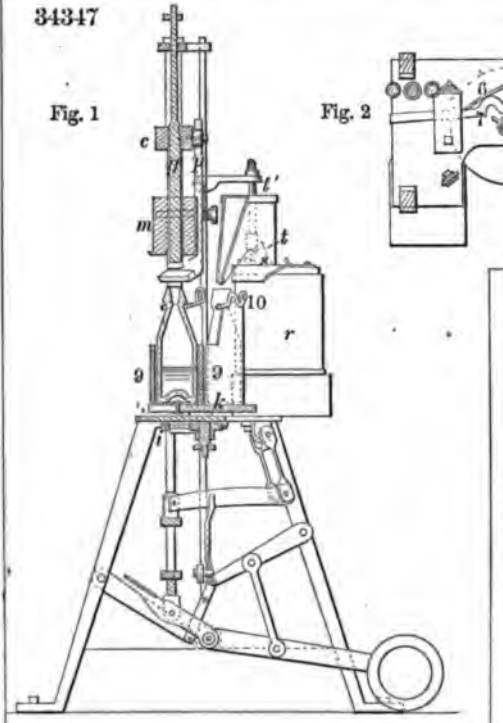

Fig. 2

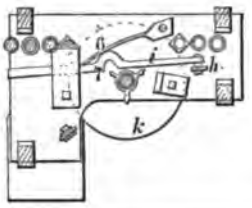

34318

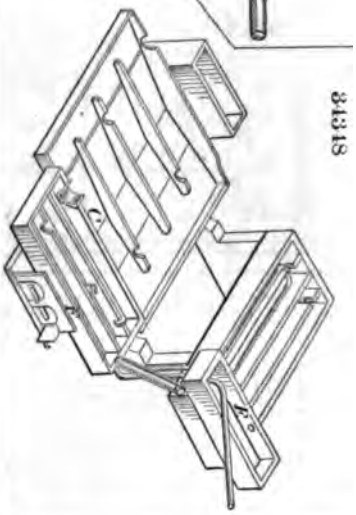

34349

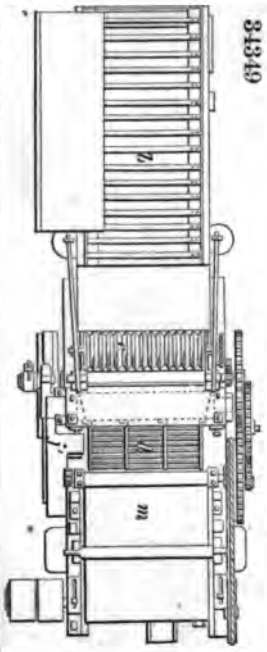

34350

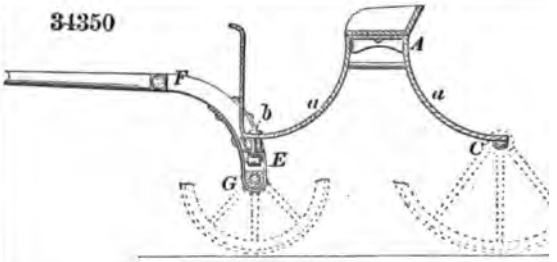

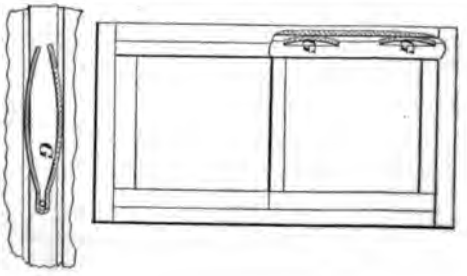

34353

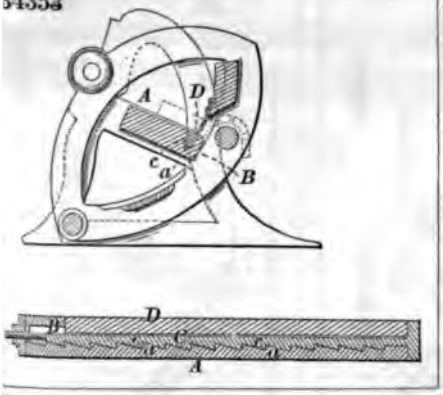

34354

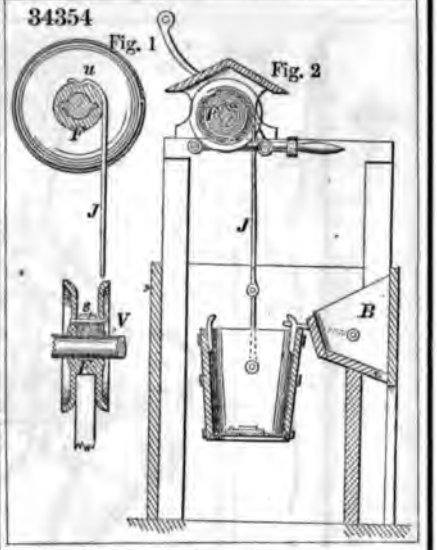

34355

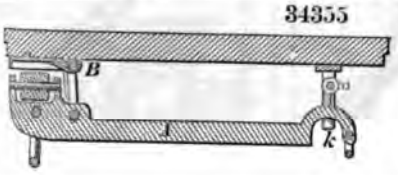

34356

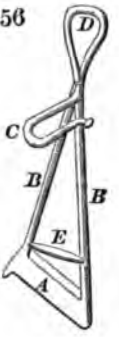

34357

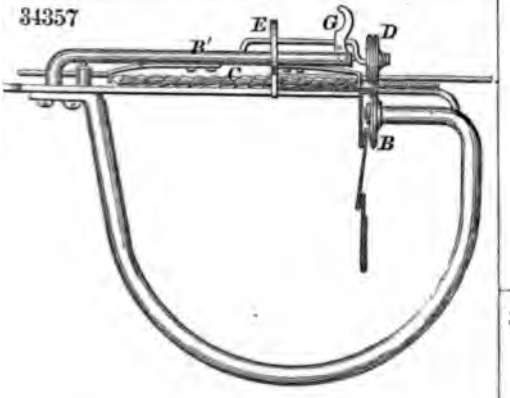

34359

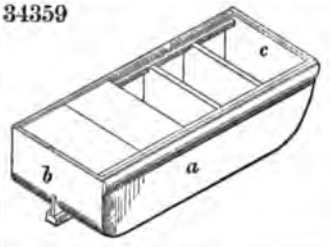

34358

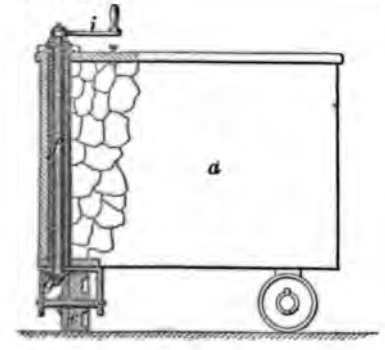

34360

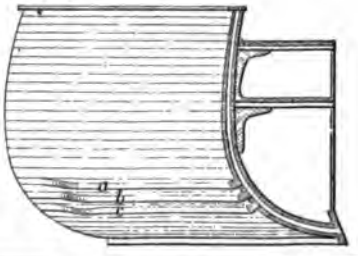

34868

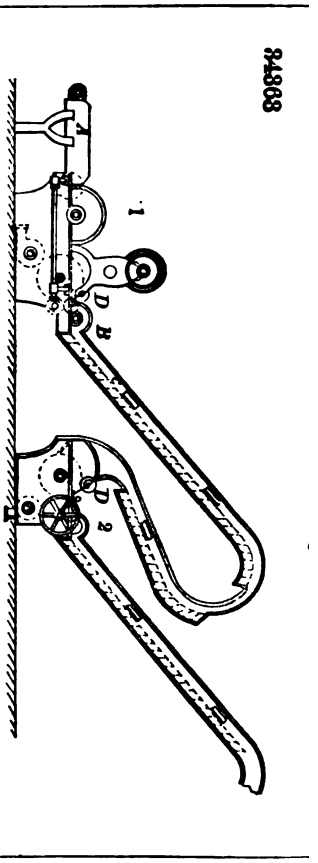

34362

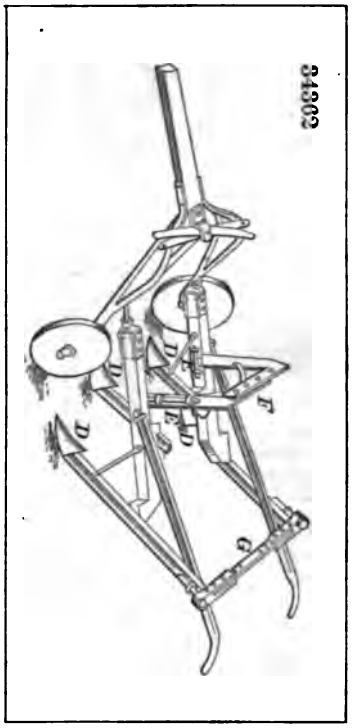

34361

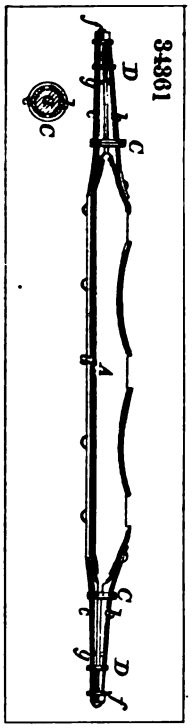

34364

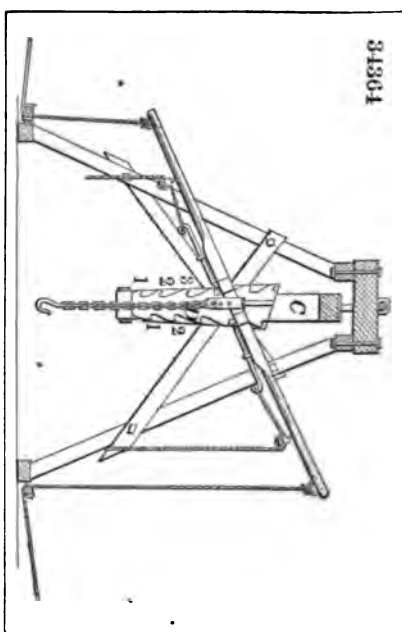

34365

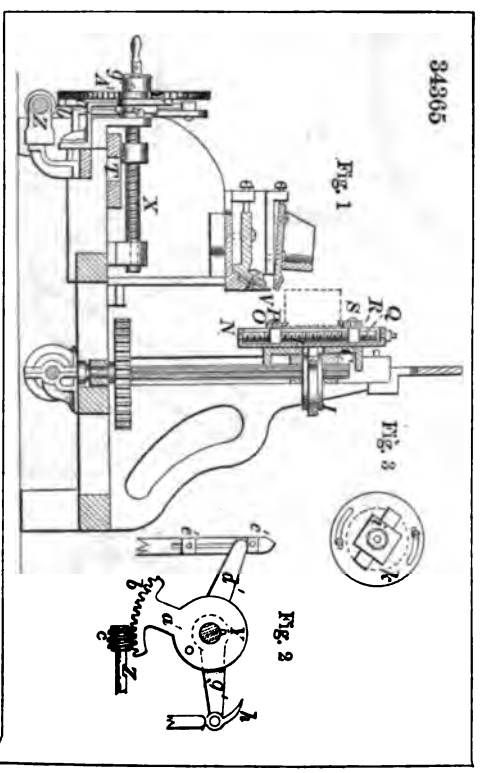

34366

Fig. 1

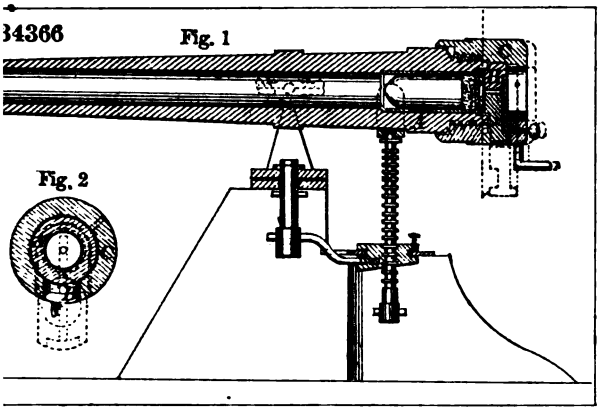

Fig. 2

34367

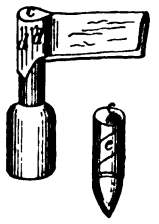

369

Fig. 1

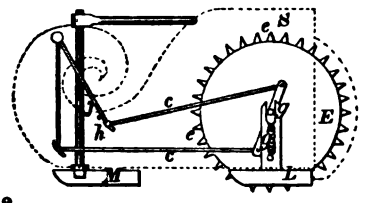

Fig. 2

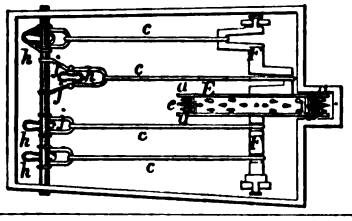

34368

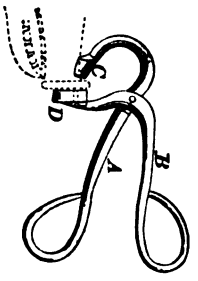

371

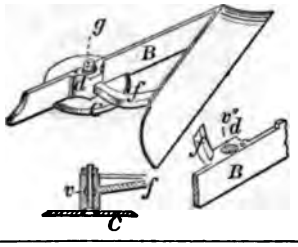

34370

Fig. 2

Fig. 1

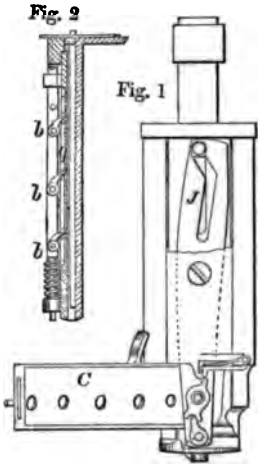

34372

Fig. 1

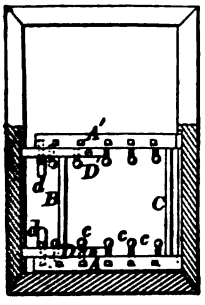

Fig. 2

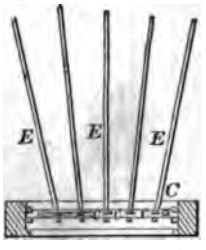

34373

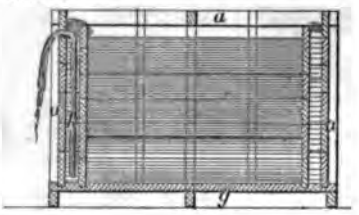

34374

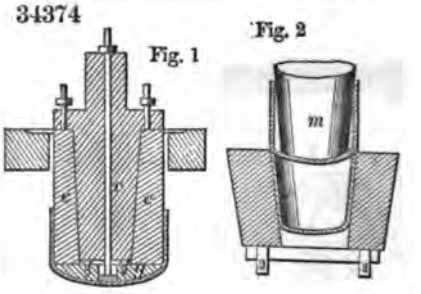

34375

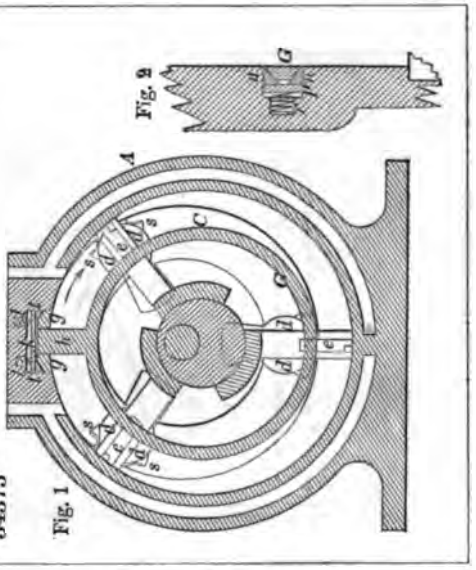

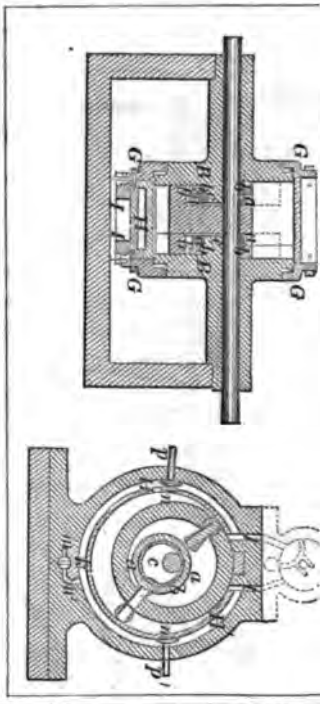

34379

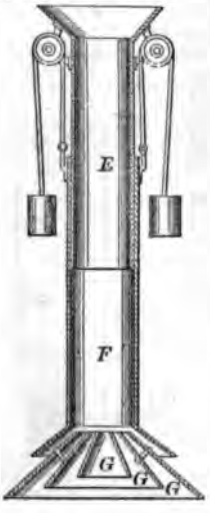

34377

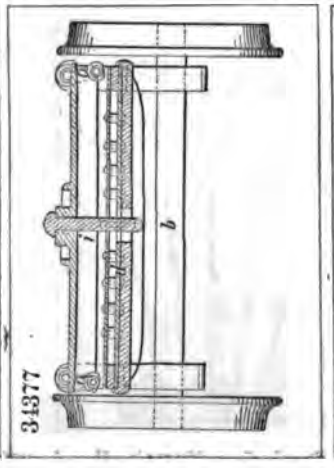

34378

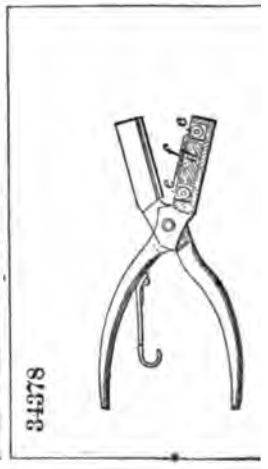

4381

Fig. 1

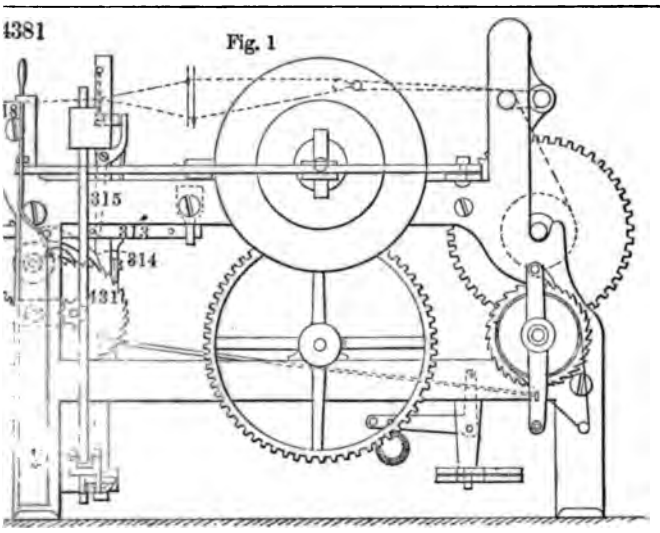

Fig. 2

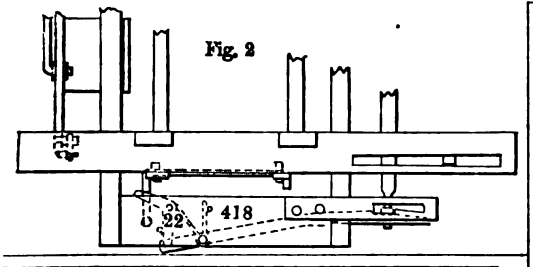

34382

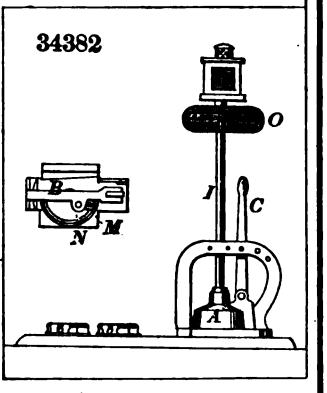

4380

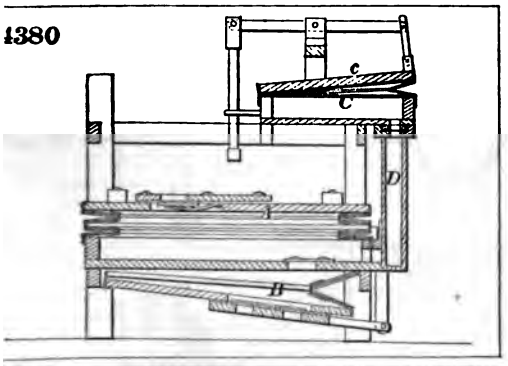

34383

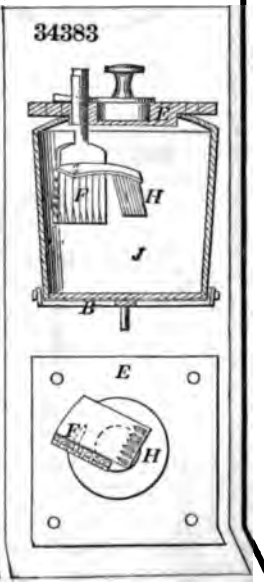

34

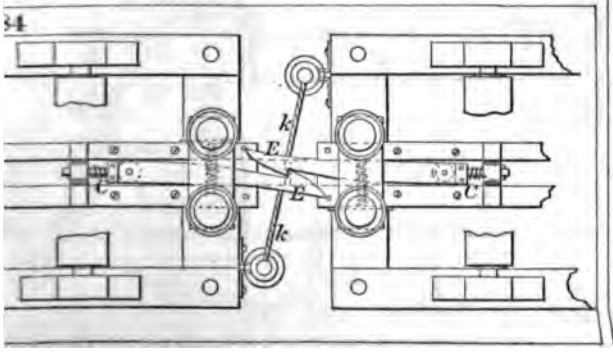

34385

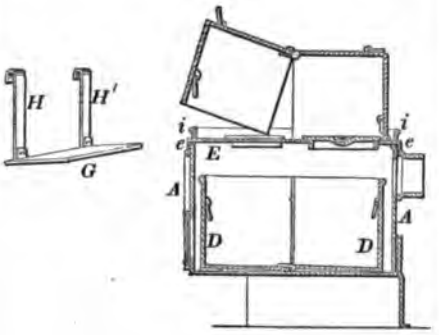

34386

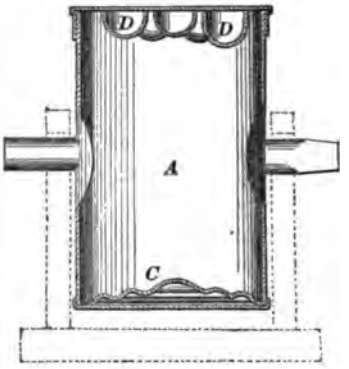

34387

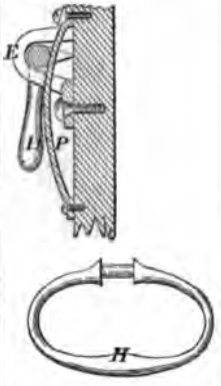

34388

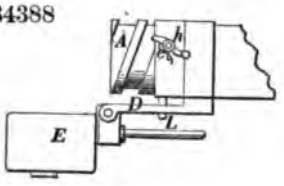

34390

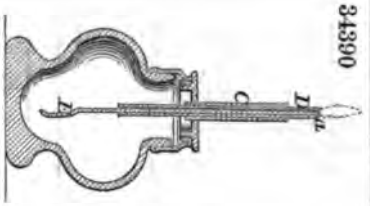

34391

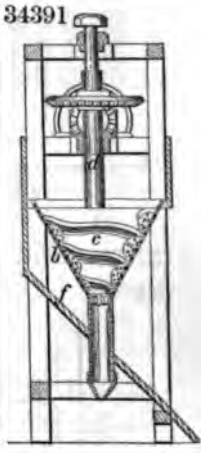

34392

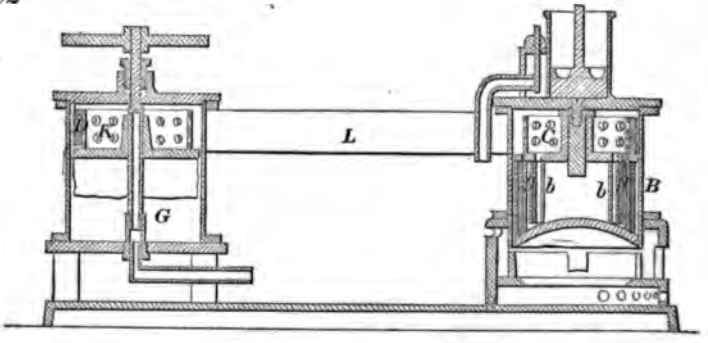

393

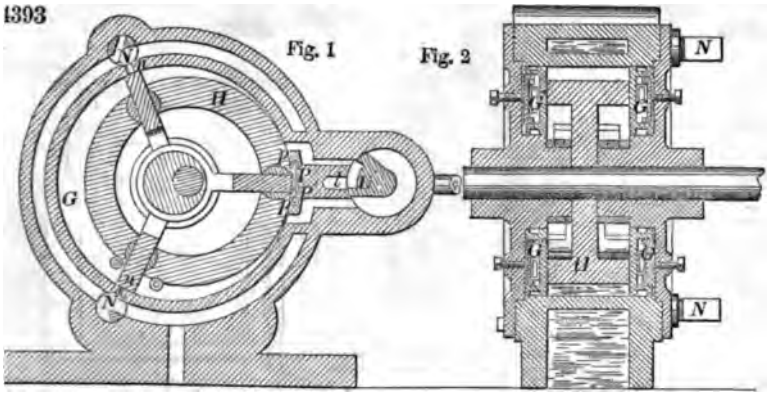

34394

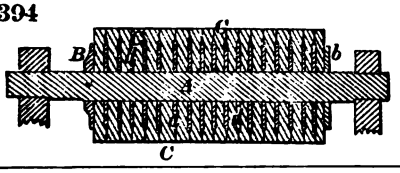

34395

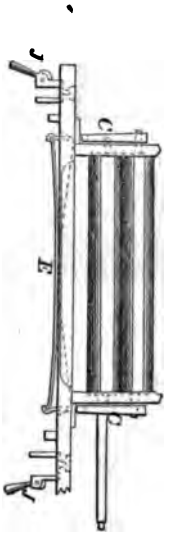

34396

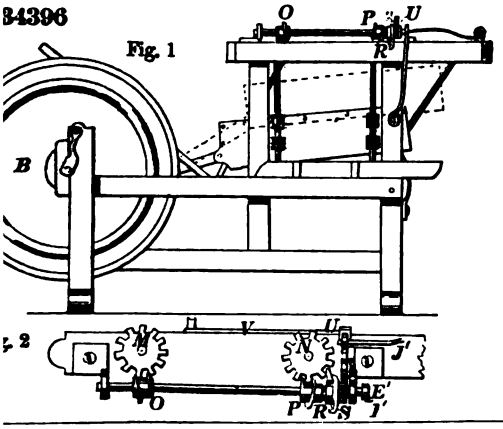

397

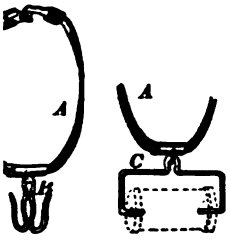

34398

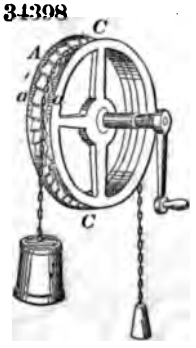

34399

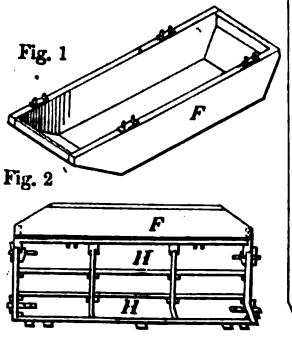

34400

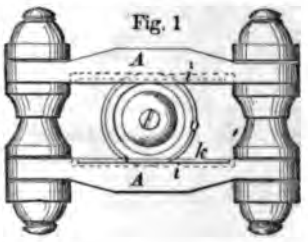

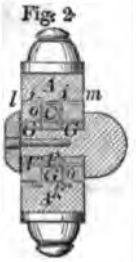

34401

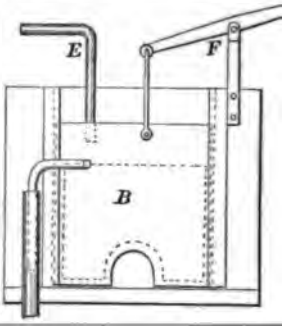

34402

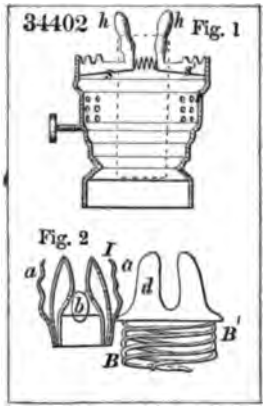

34403

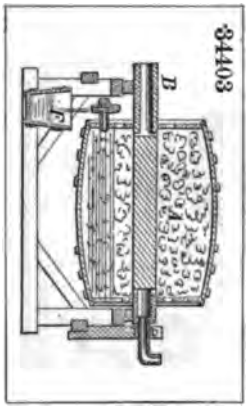

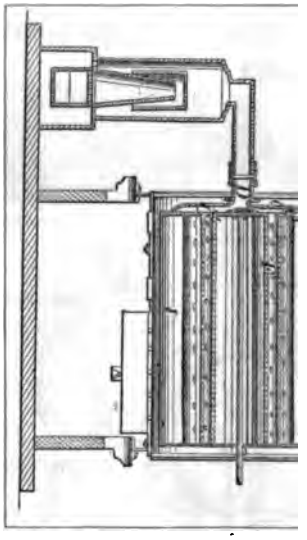

34407

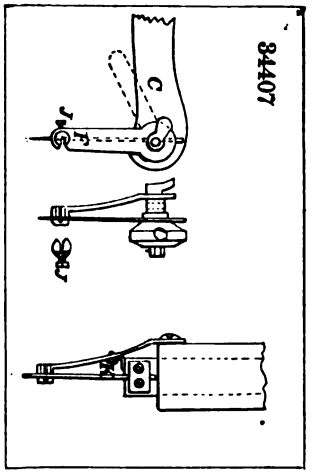

34406

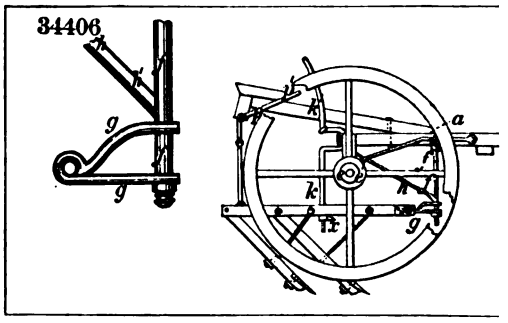

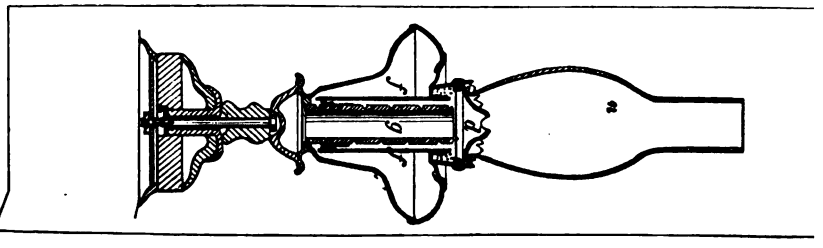

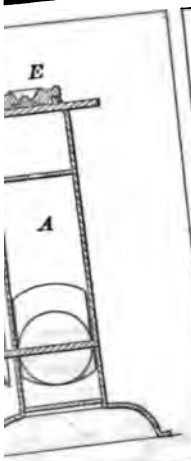

34410

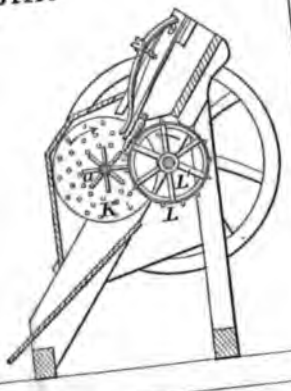

34412

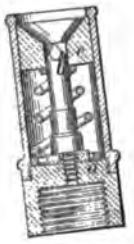

34411

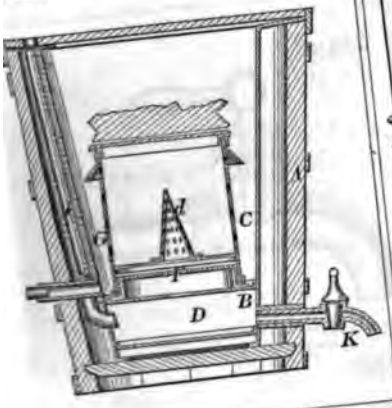

34413

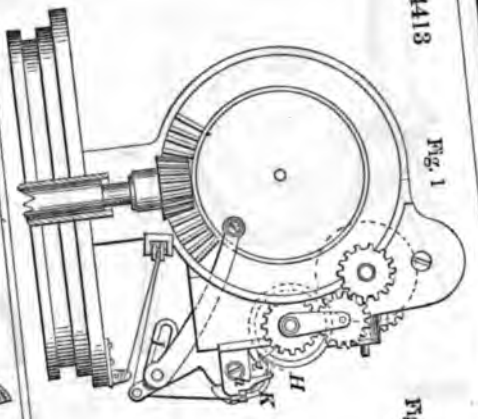

4414

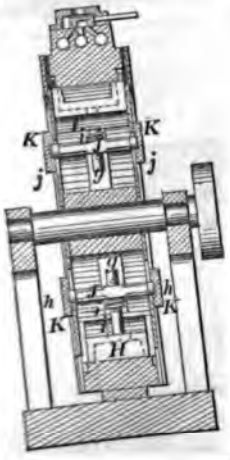

34415

34416

Fig. 1

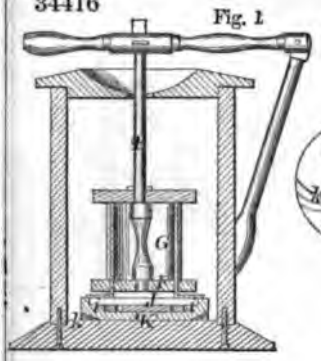

Fig. 2

34417

Fig. 1

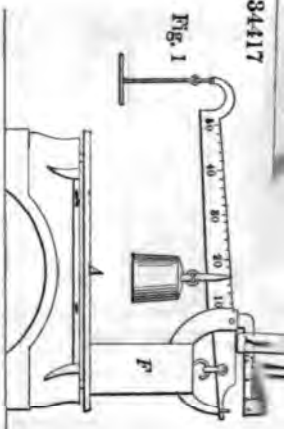

Fig. 2

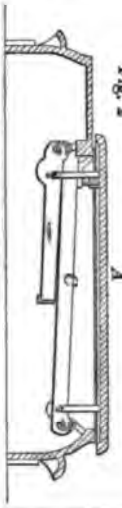

34418

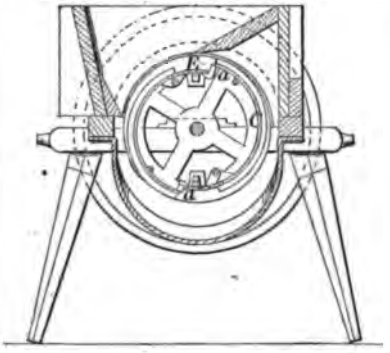

34419

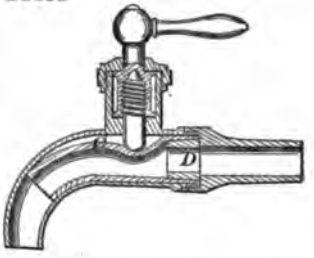

34420

34421

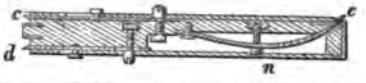

34422

Fig. 1

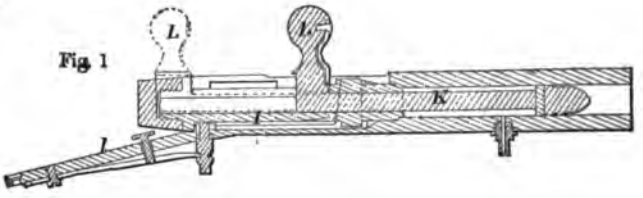

Fig. 2

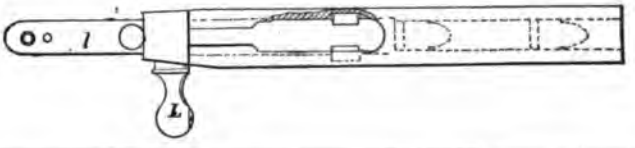

34423

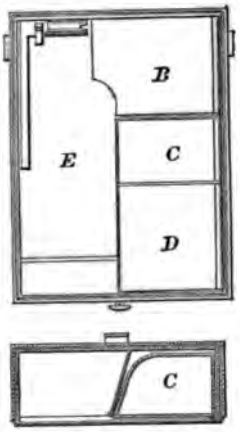

34424.

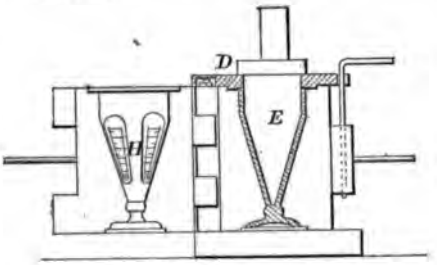

34426

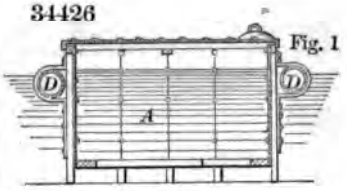

34427

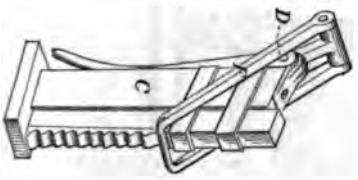

34425

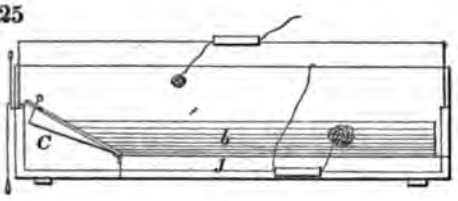

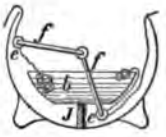

34431

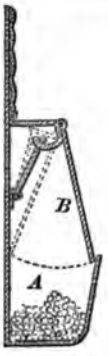

34430

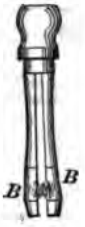

34429

34432

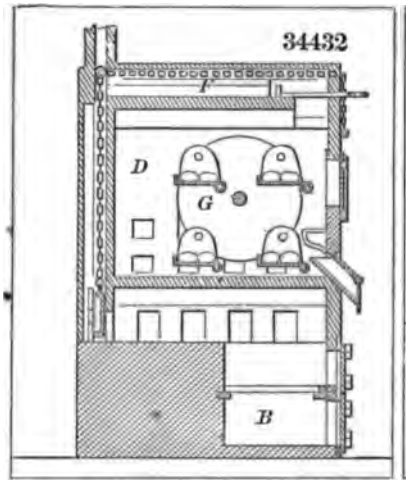

34433

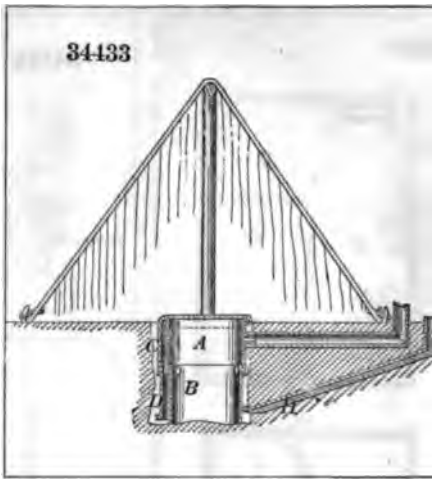

34436

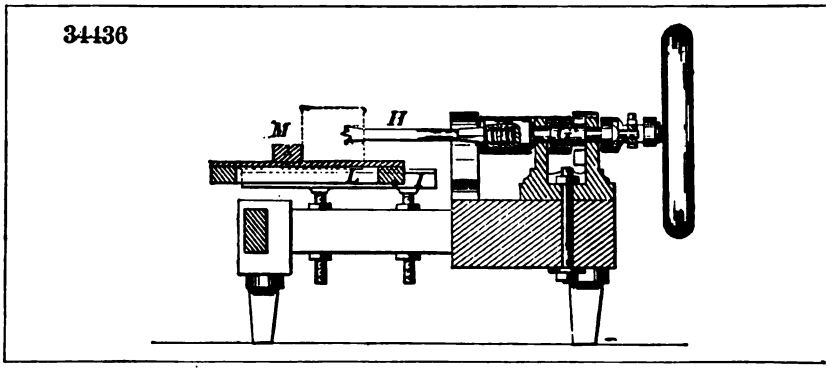

34434

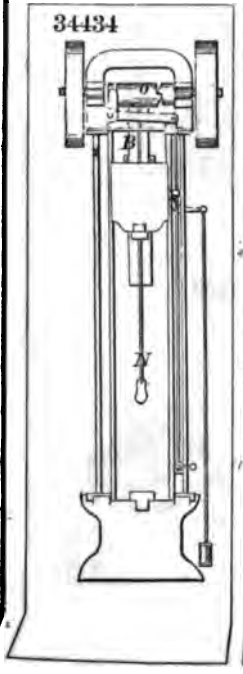

34438

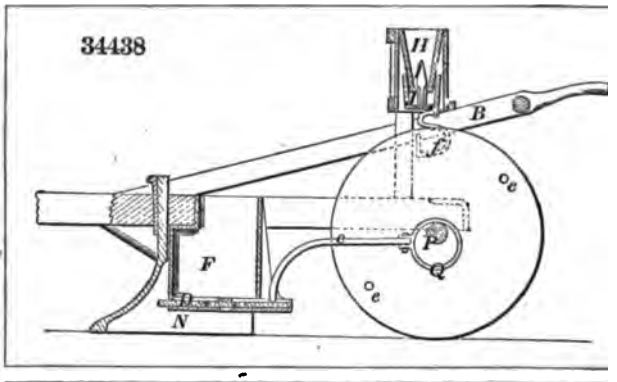

34439

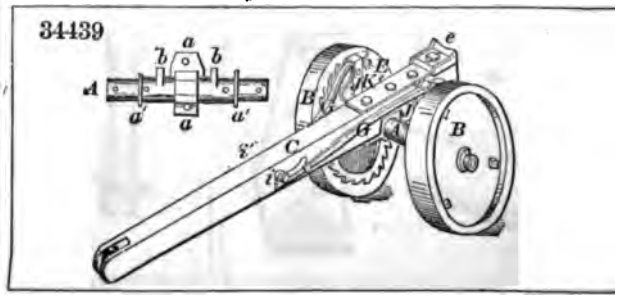

440

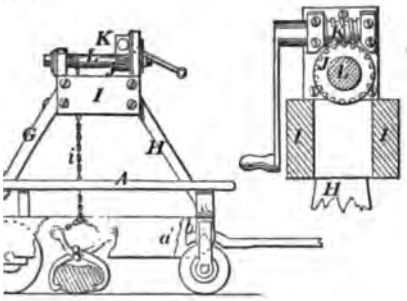

34441

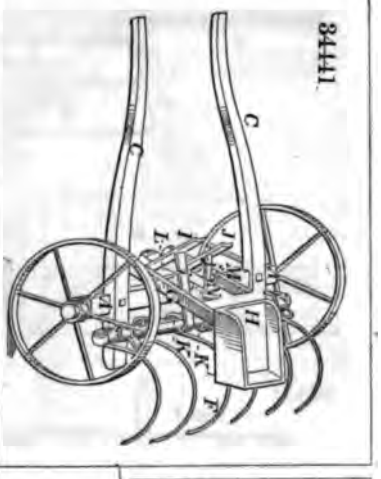

34442

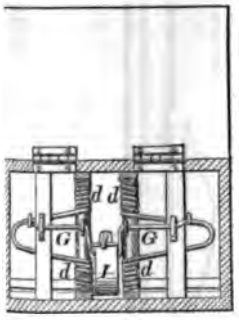

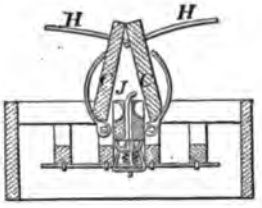

34443

34444

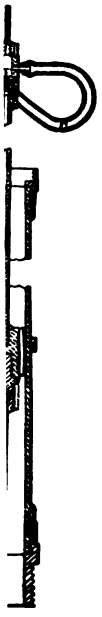

34445

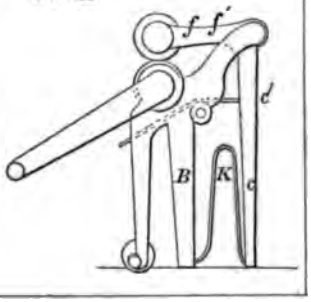

34447

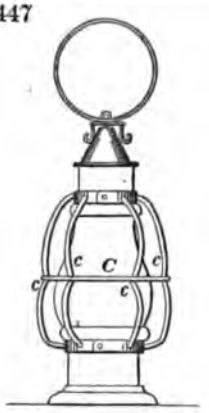

34446

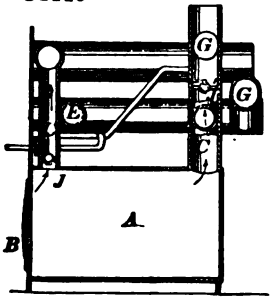

34448

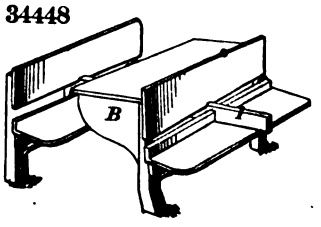

34449

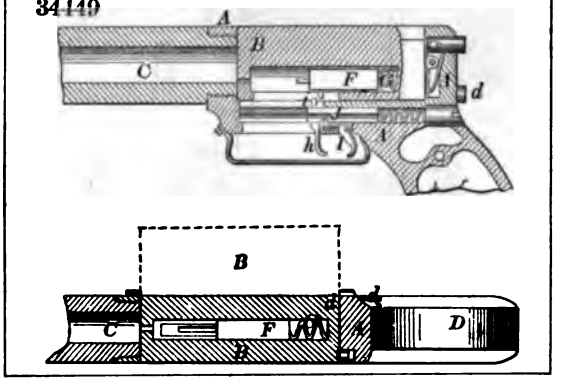

34450

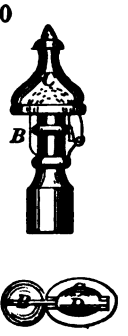

34451

Fig. 1

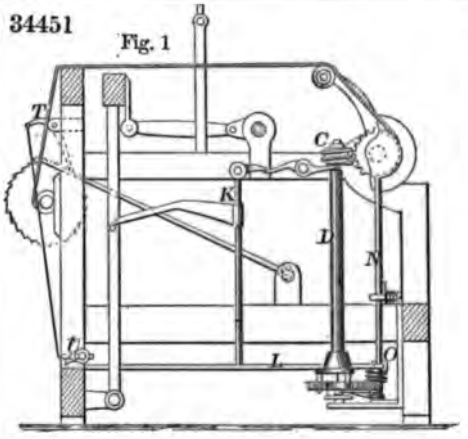

Fig. 2

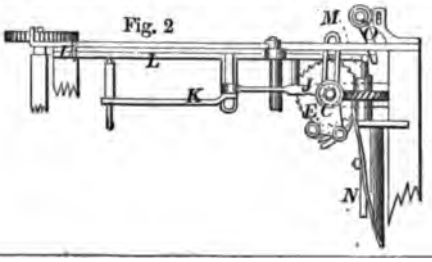

34452

34454

34455

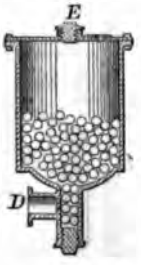

34456

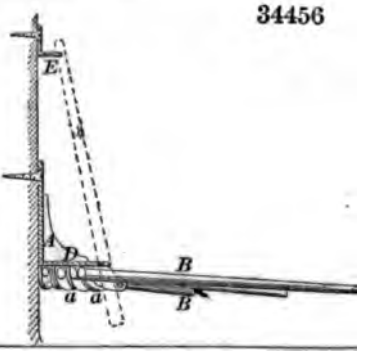

34457

34459

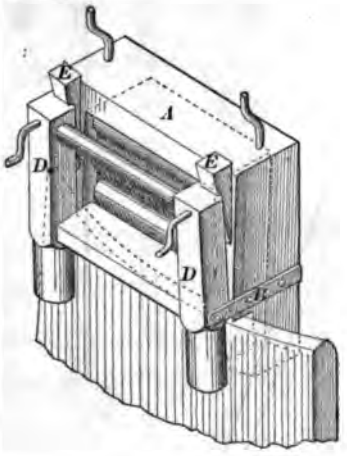

34460

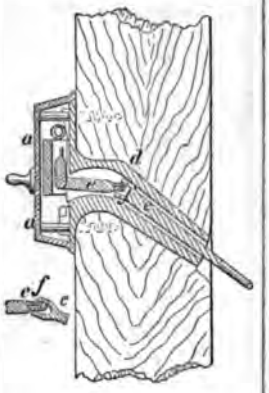

34462

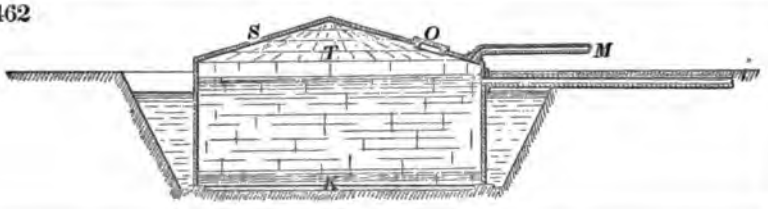

34458

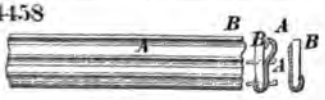

34461

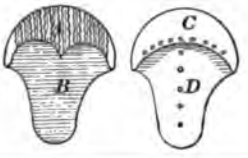

34465

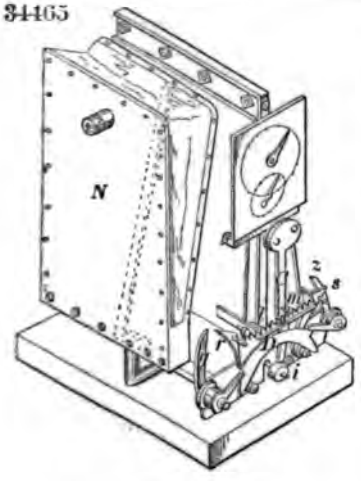

34463

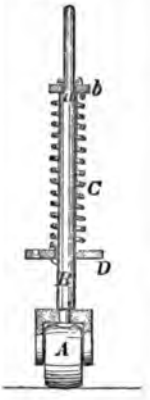

34464

34466

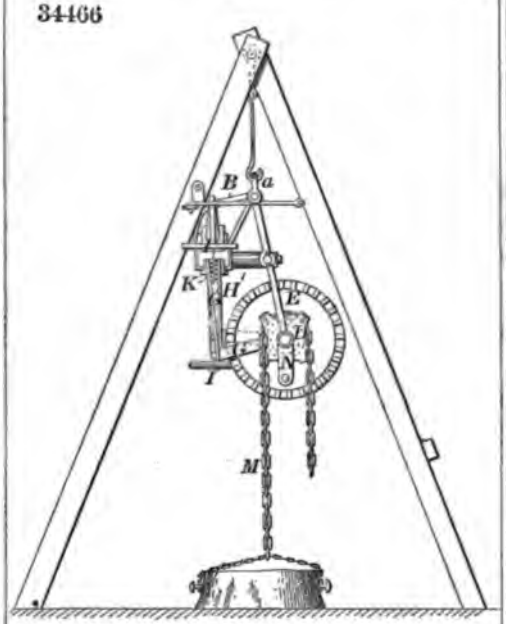

34467

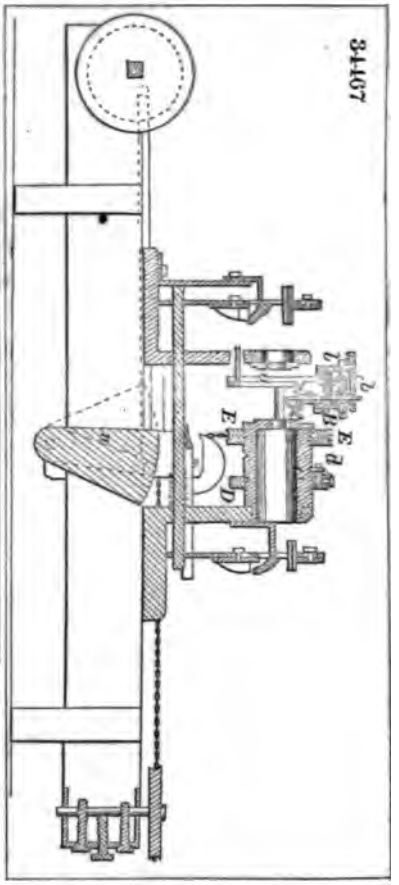

34468

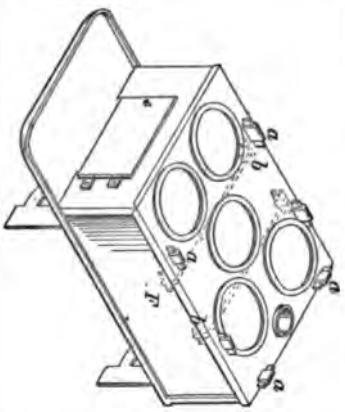

34469

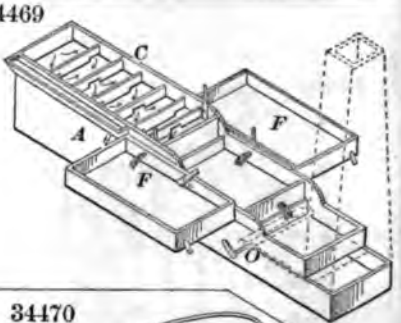

34470

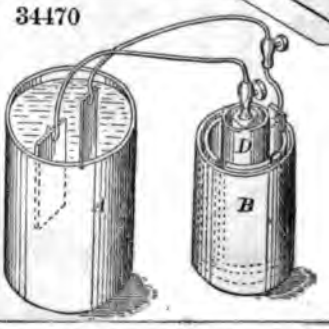

471

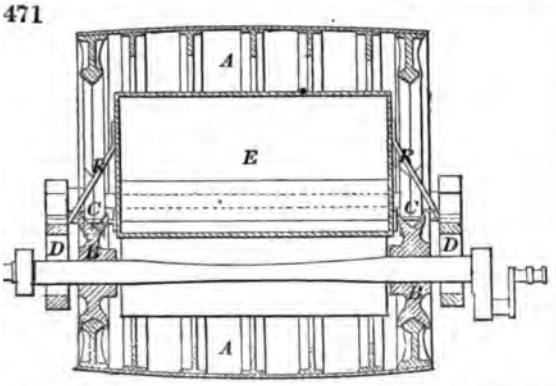

34472

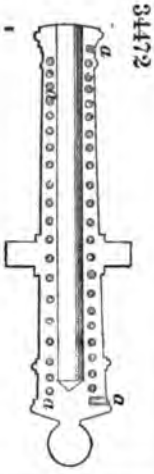

34473

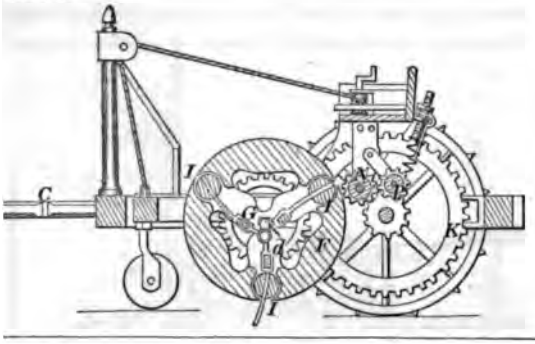

34474

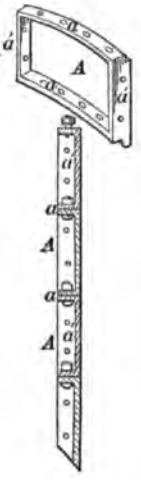

4475

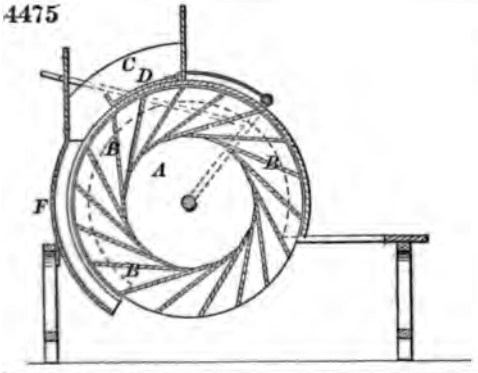

34476

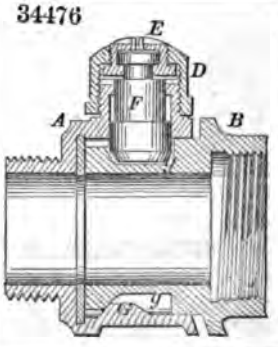

477

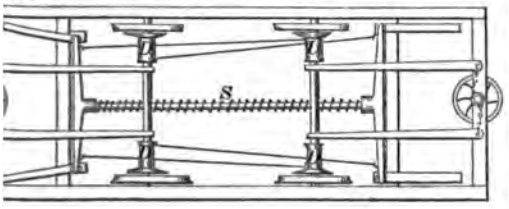

34478

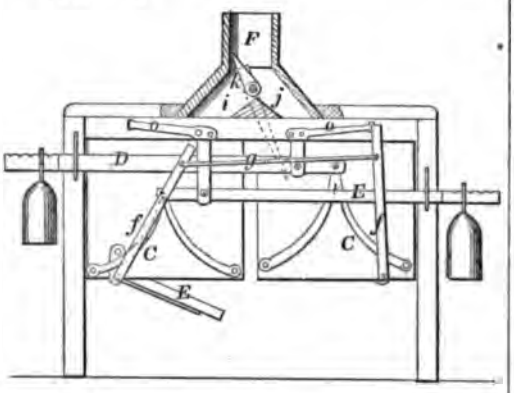

34479

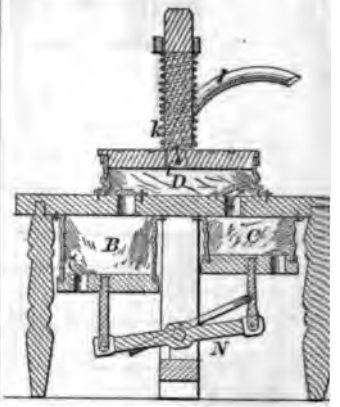

34480

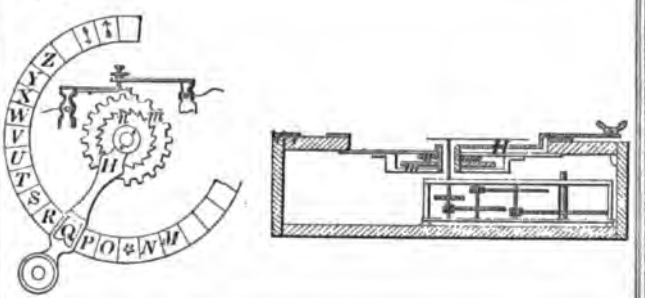

34481

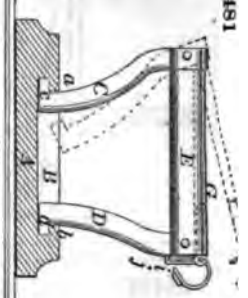

34482

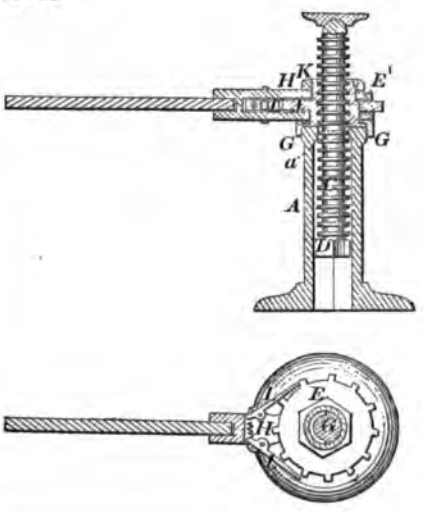

34484

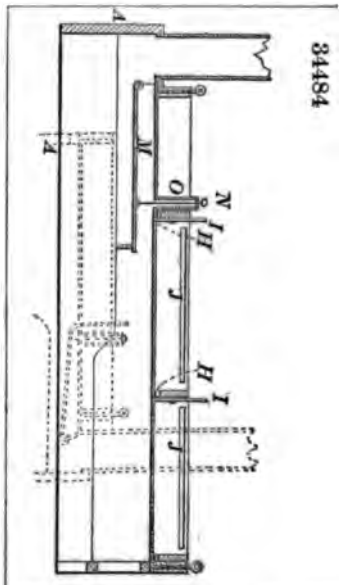

34485

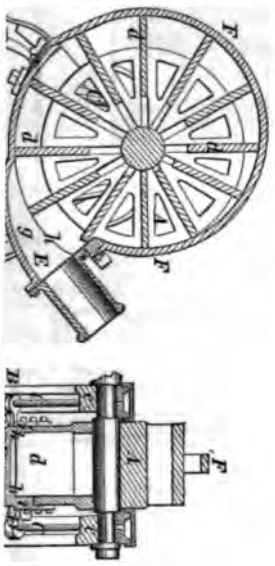

34486

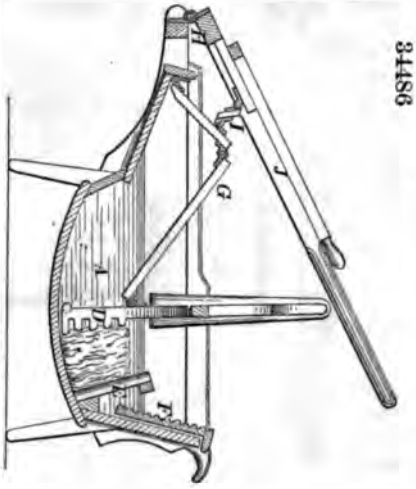

488

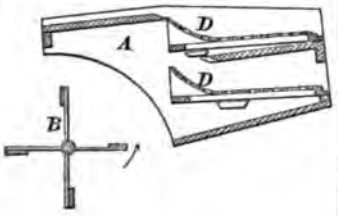

34487

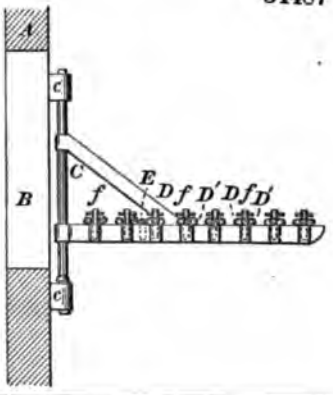

34490

34491

34489

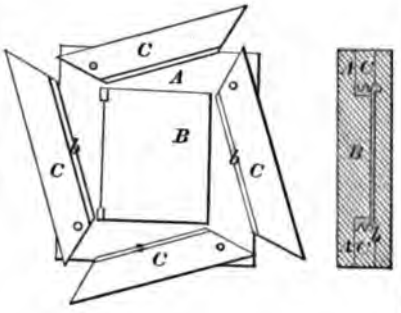

34492

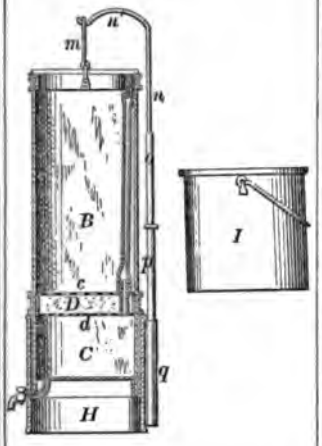

34493

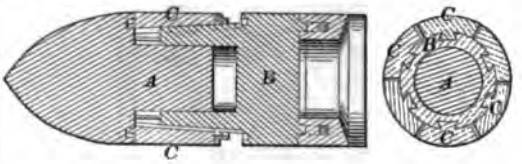

34495

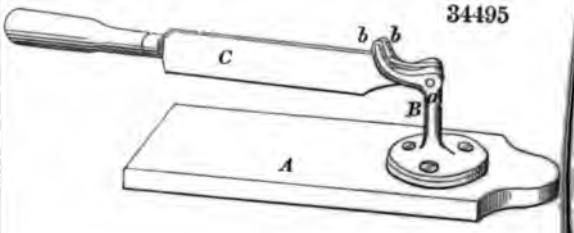

34494

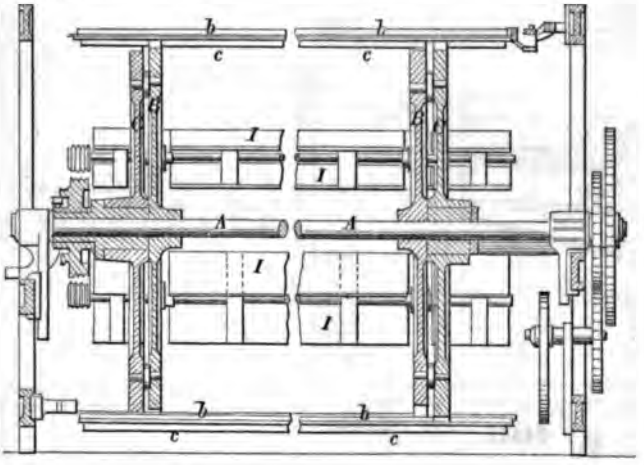

34496

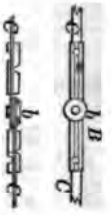

34498

34497

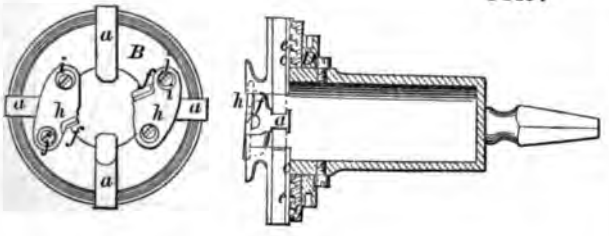

34499

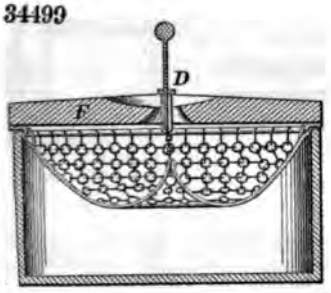

34500

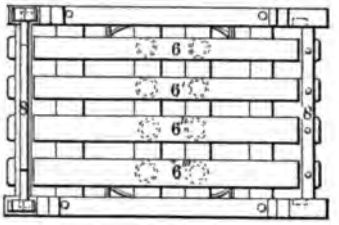

34503

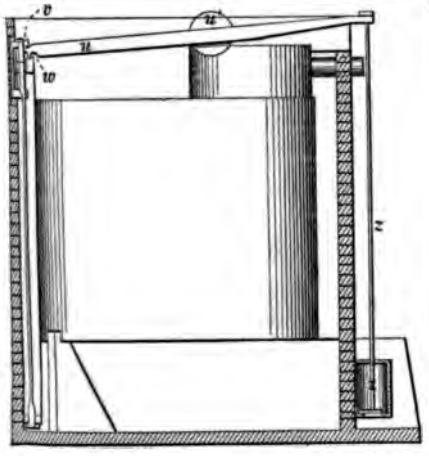

34502

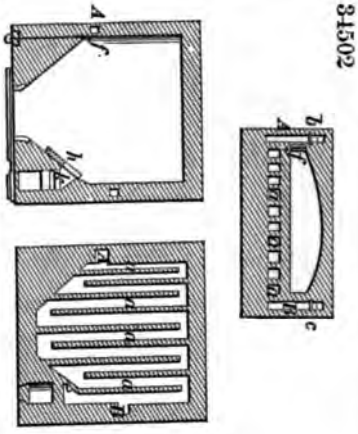

34504

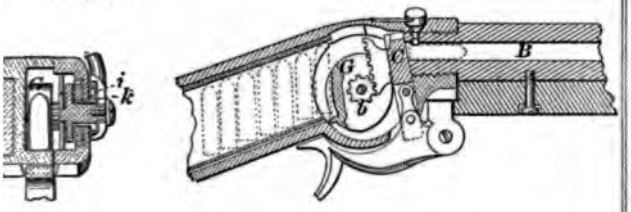

34501

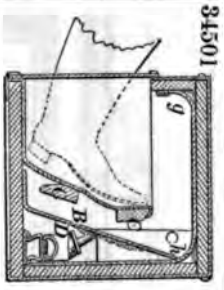

34505

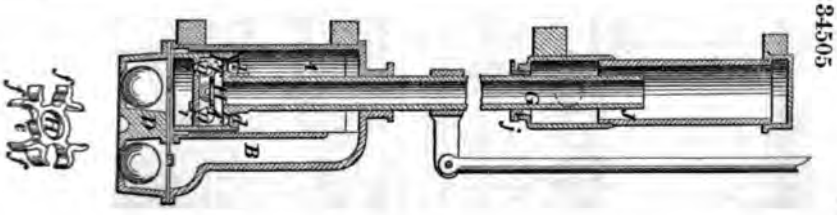

34506

Fig. 1

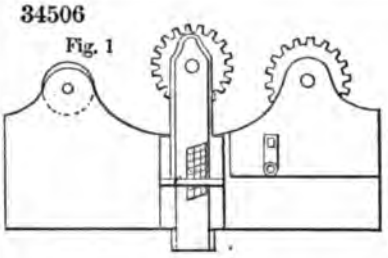

Fig. 2

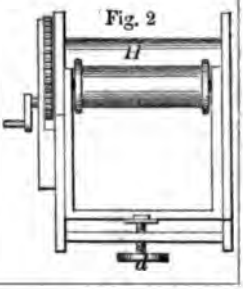

34507

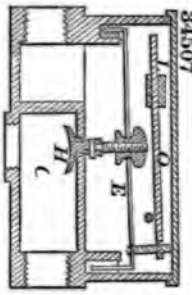

34508

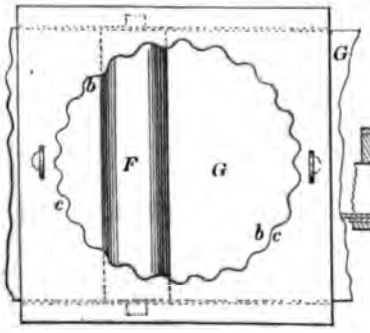

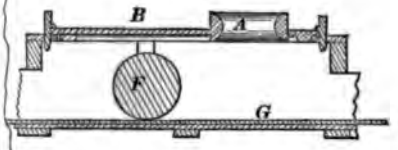

34509

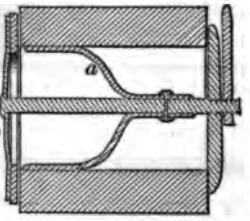

34511

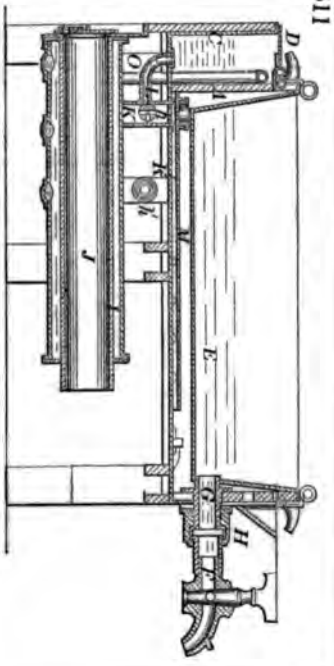

34510

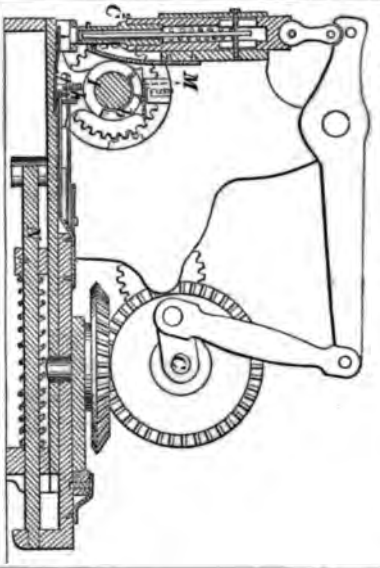

4512

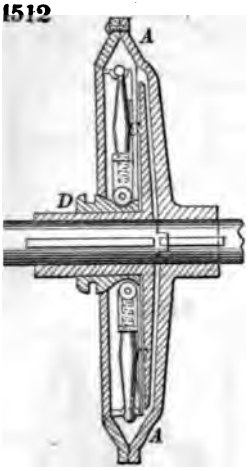

34513

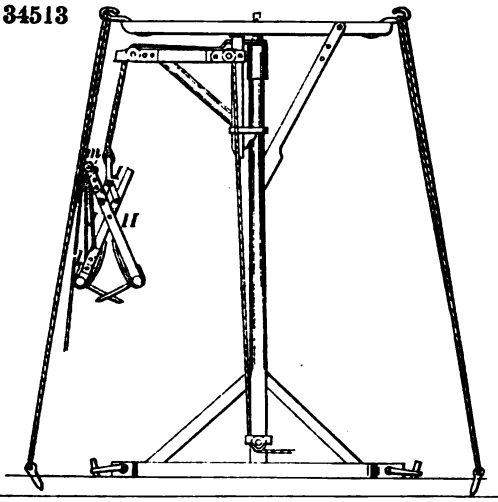

4514

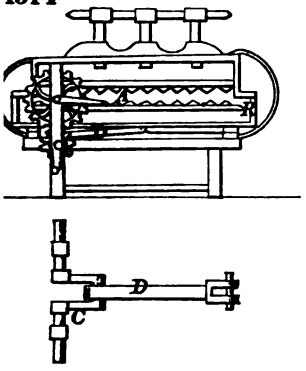

34515

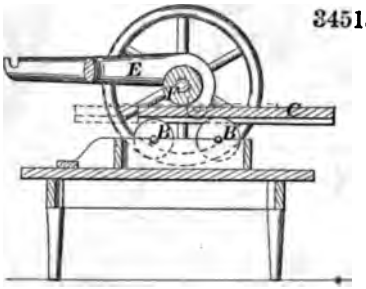

34516

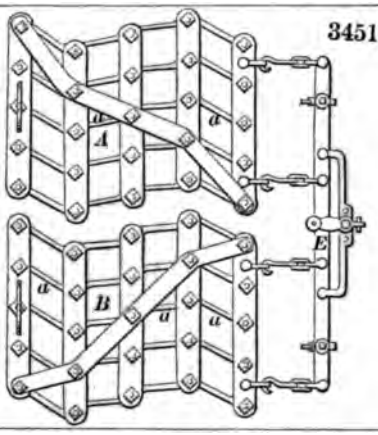

34518

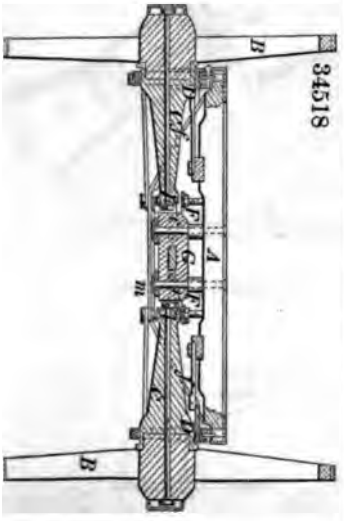

34517

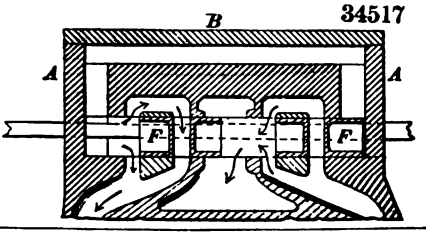

34519

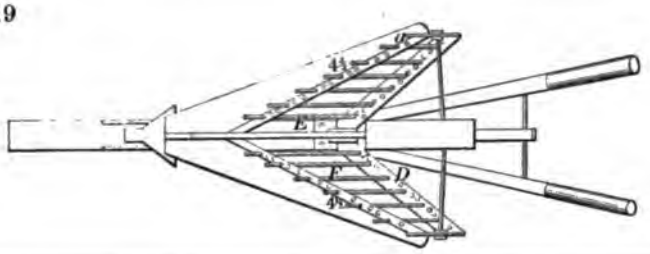

34520

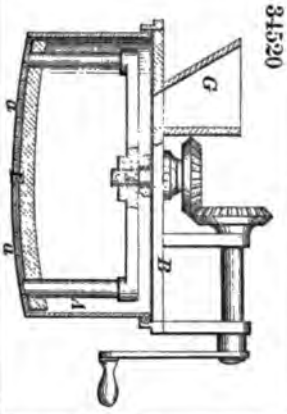

34521

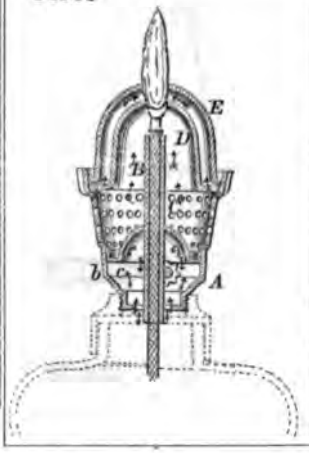

34523

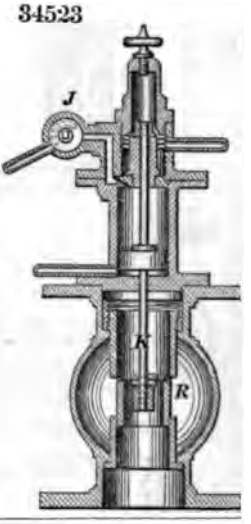

34524

34525

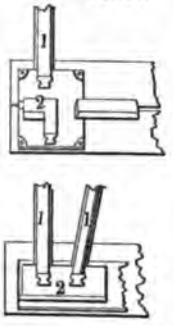

34526

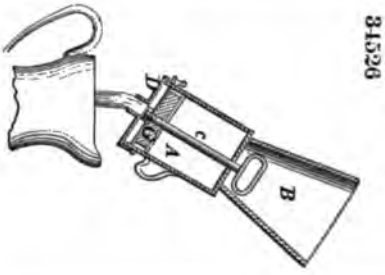

34527

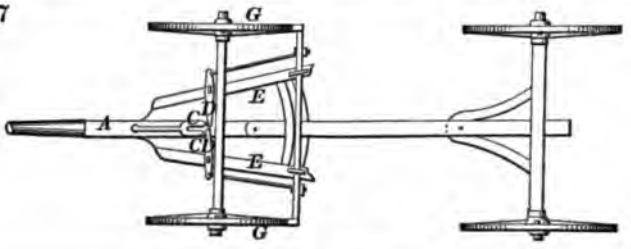

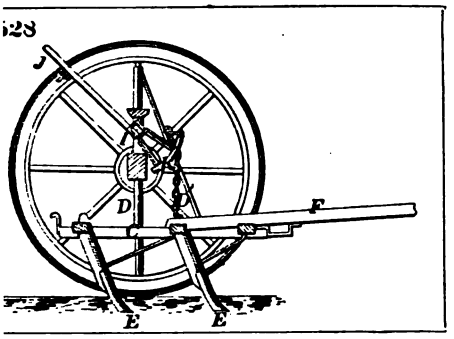
528
J
D
F
E
E

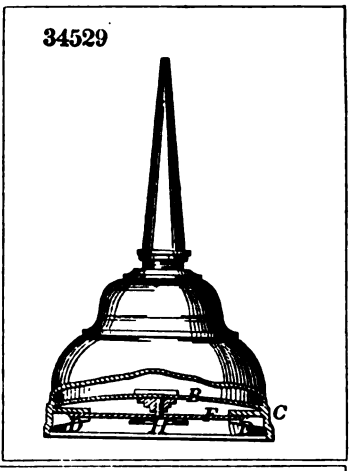
34529
B
C
D
H
E

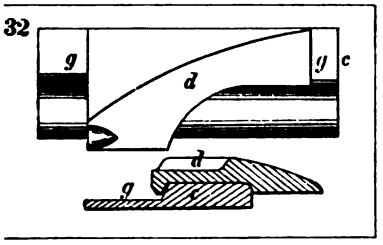
32
g
g
c
d
d
g

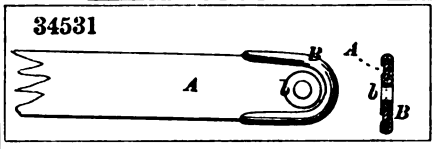
34531
A
B
A
b
B

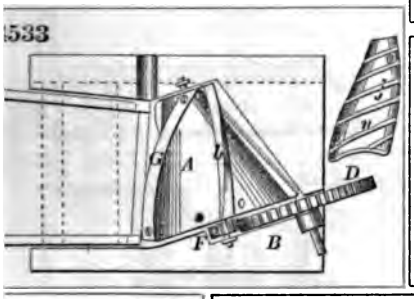
533
G
A
b
D
F
B

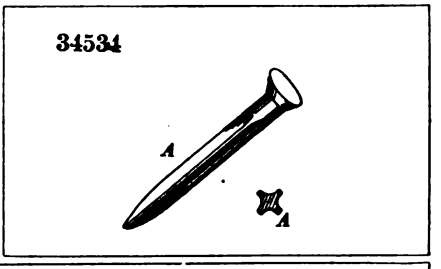
34534
A
A

535
k
r
a
b

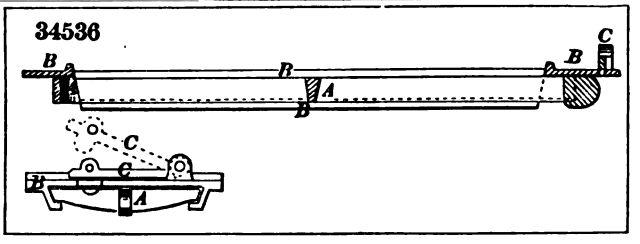
34536
B
B
B
C
A
B
C
C
B
A

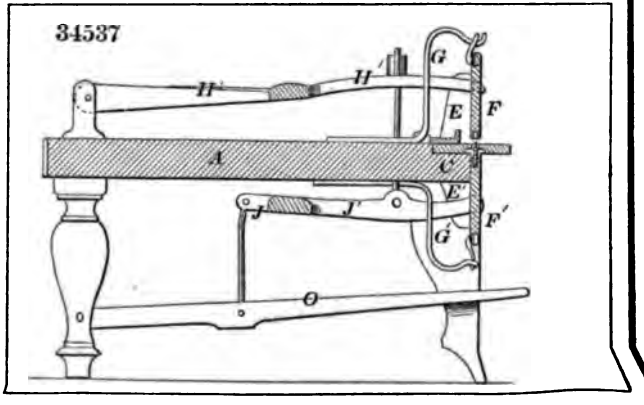
34537
H
H
G
E
F
A
C
E'
J
J'
F'
G'
O

34538

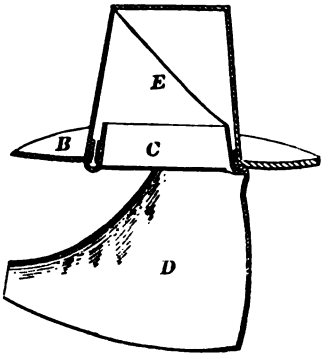

34539

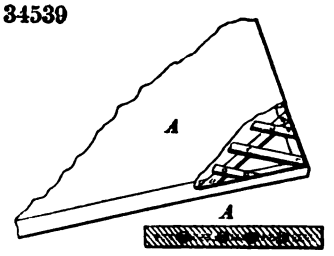

34540

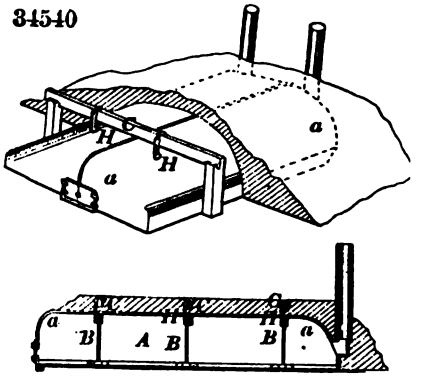

34541

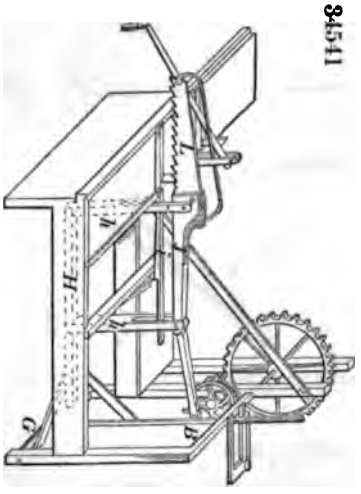

34542

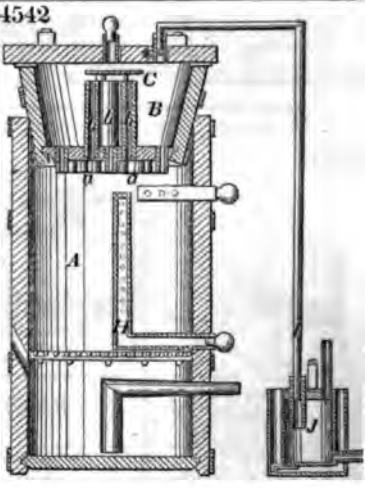

34543

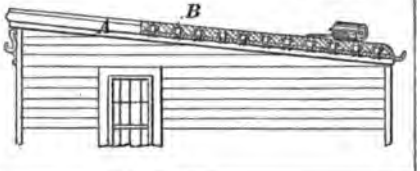

34544

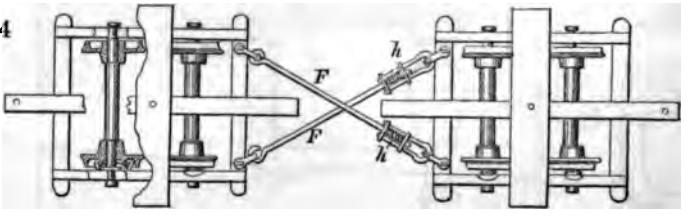

4545

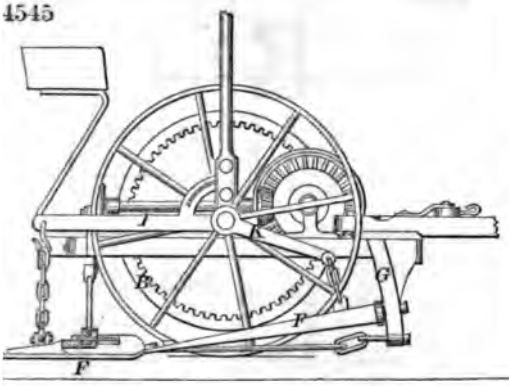

34546

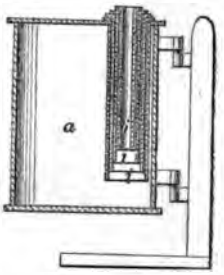

34548

34547

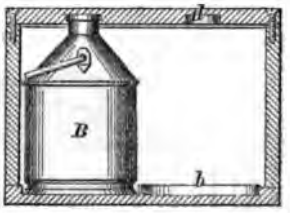

34549

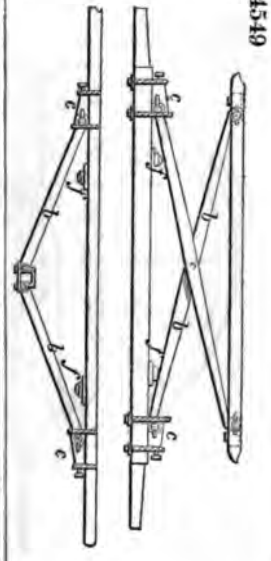

550

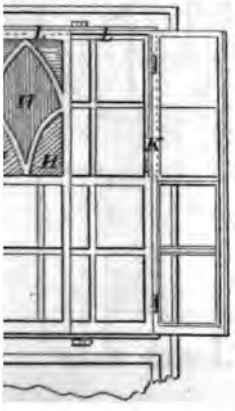

34551

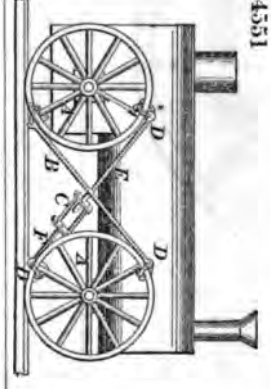

34552

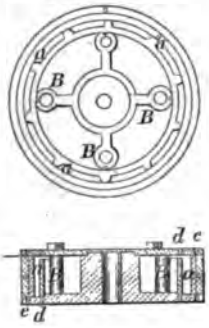

34553

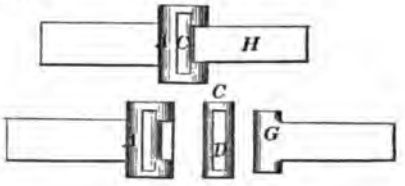

34555

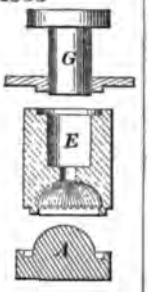

34554

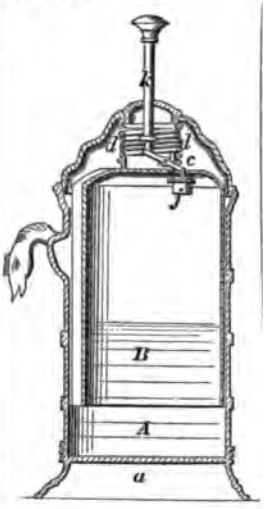

34557

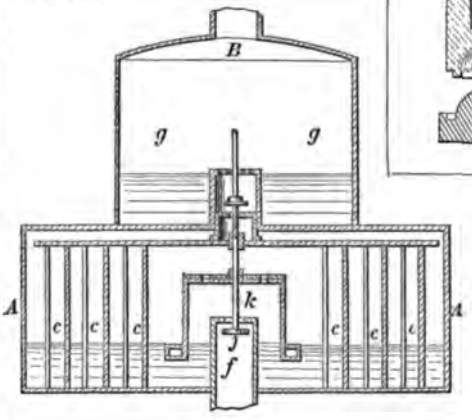

34558

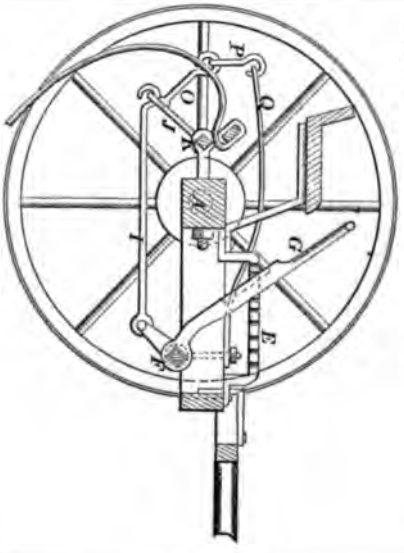

34556

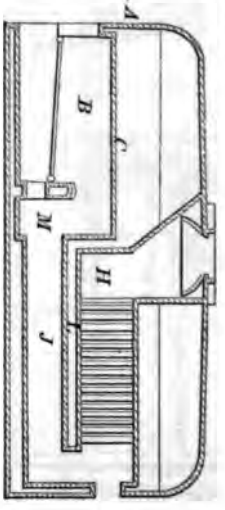

559

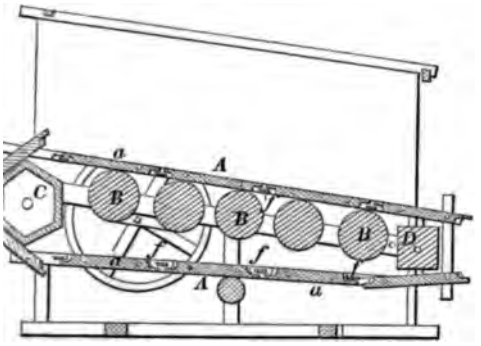

34560

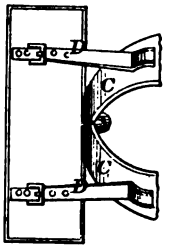

4561

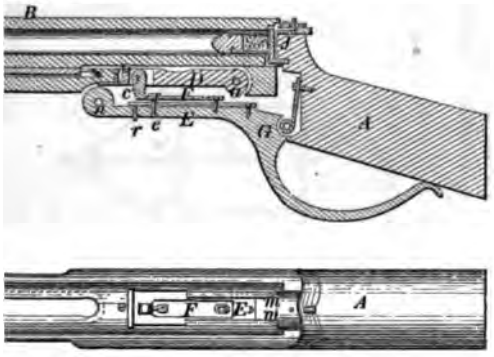

34563

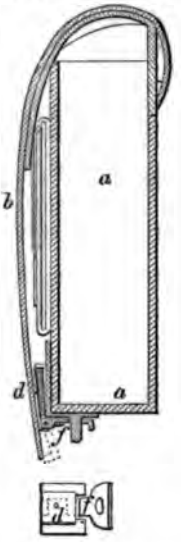

562

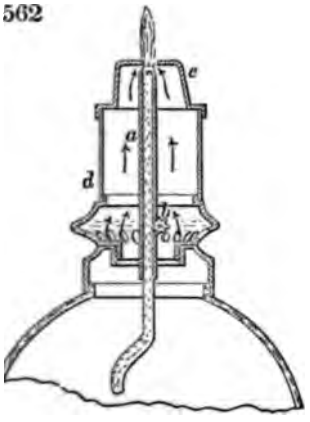

34564

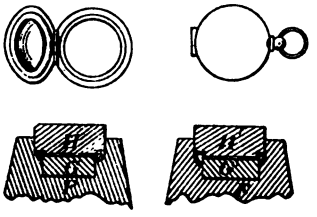

34565

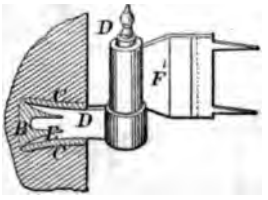

34566

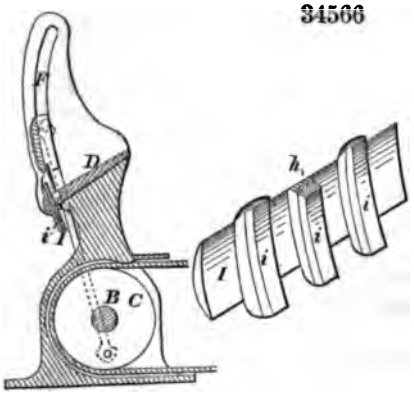

34567

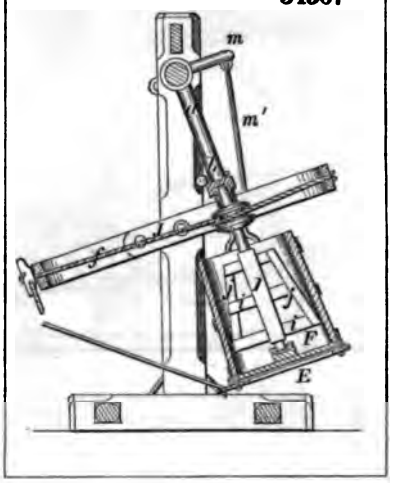

34570

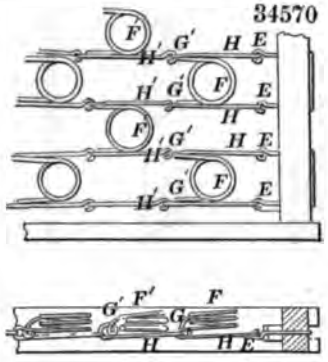

34569

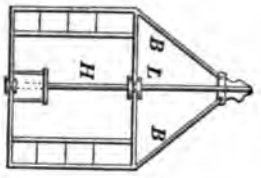

34572

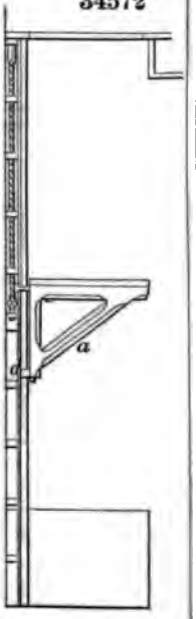

34568

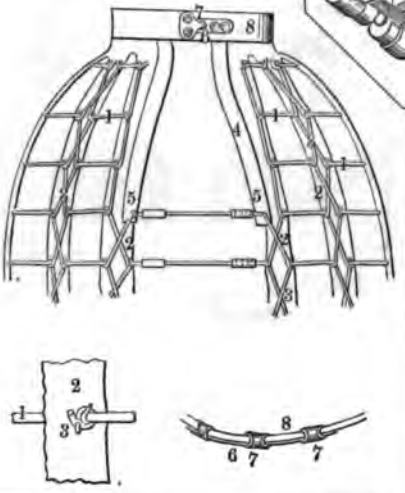

34571

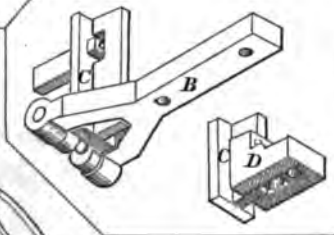

C D
E
F

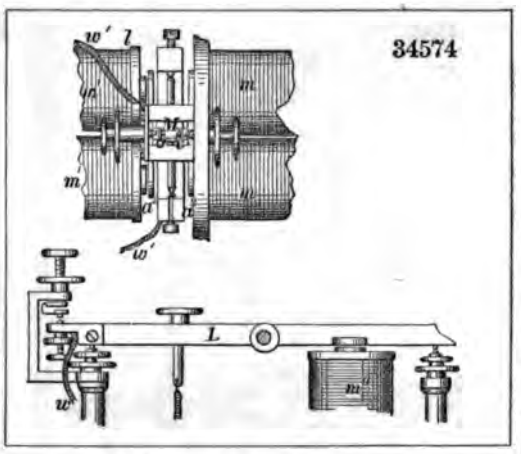
34574
L

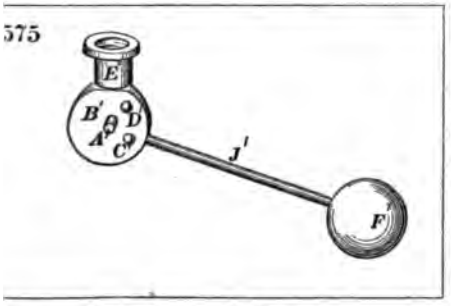
E
B'
D
A
C
J'
F'

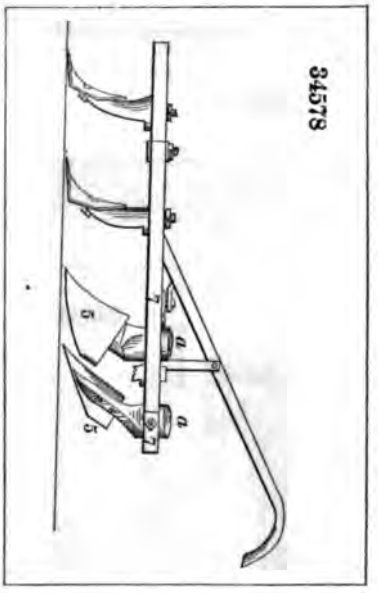
34578

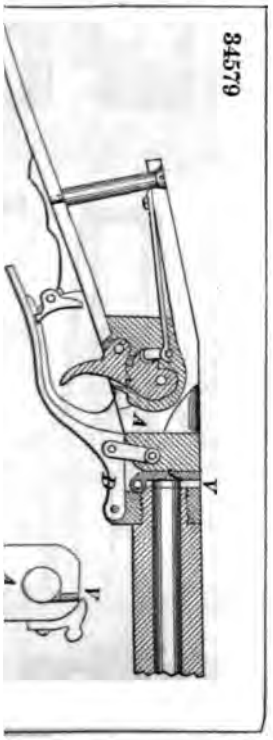
34579
A
B
Y

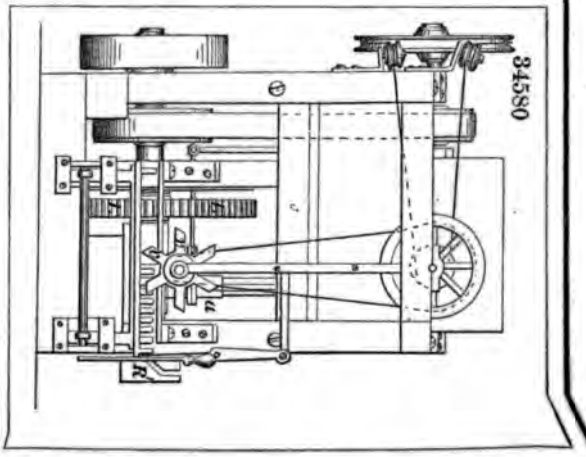
34580

34581

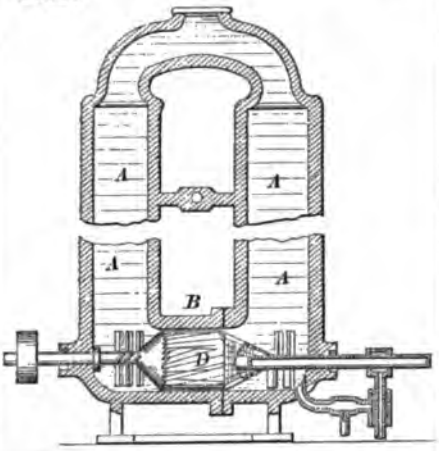

34582

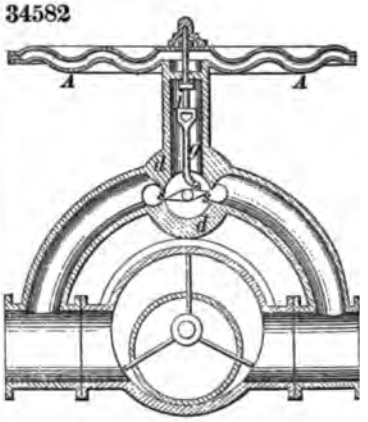

34583

34585

34586

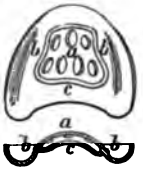

34584

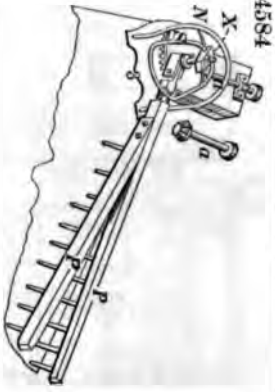

34587

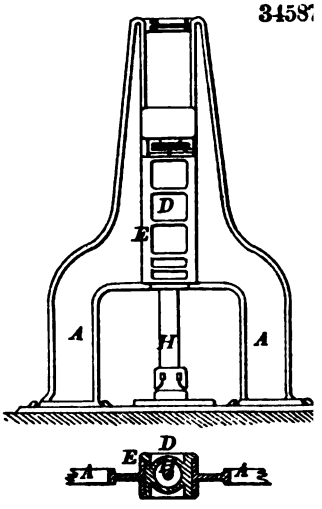

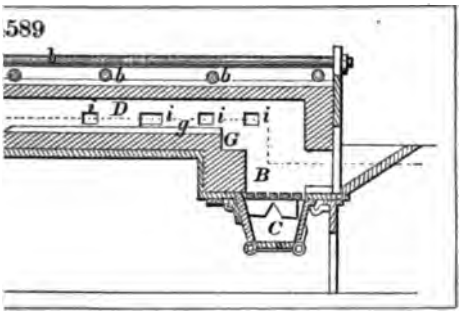
589
b
b
b
D
i
g
i
i
G
B
C

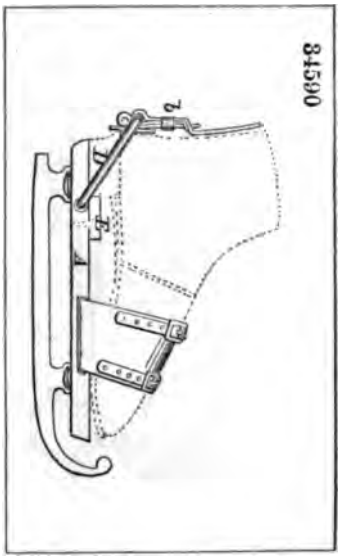
34590
L
F

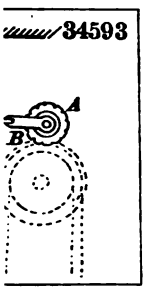
34593
A
B

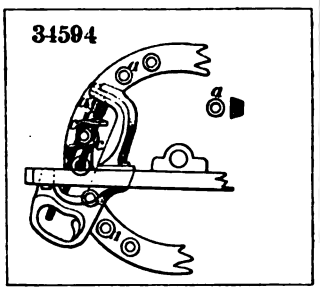
34594
a
a

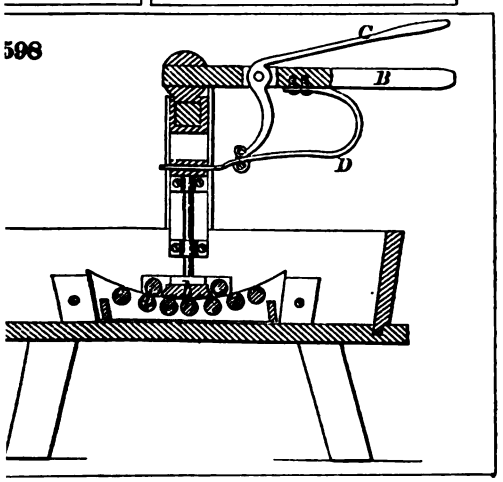
598
C
B
D

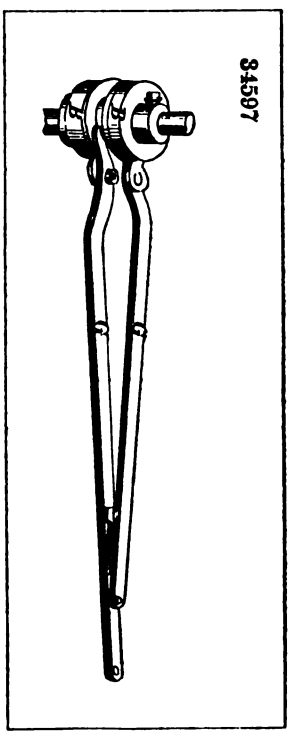
34597

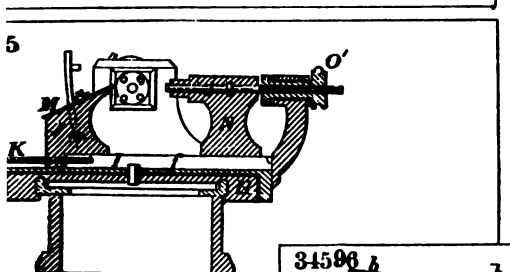
5
O′
M
N
K
L
B

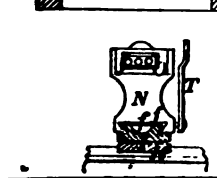
N
T

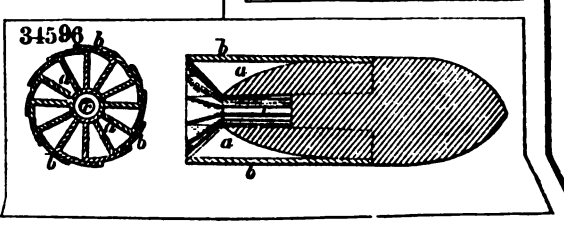
34596
b
a
b
b
a
b

34599

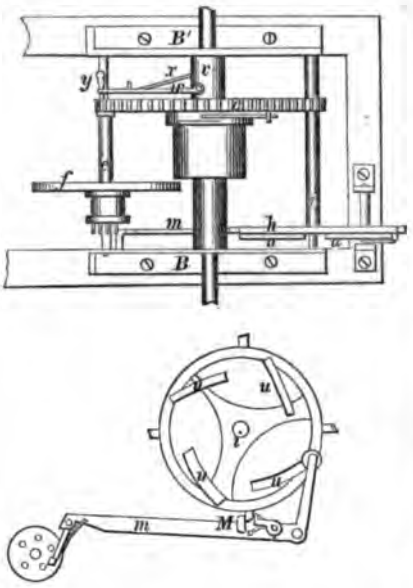

34600

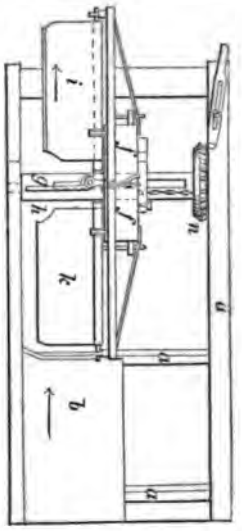

34601

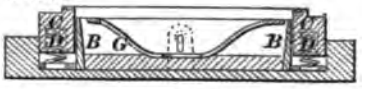

34602

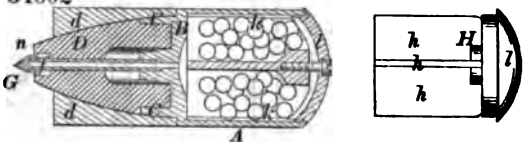

34603

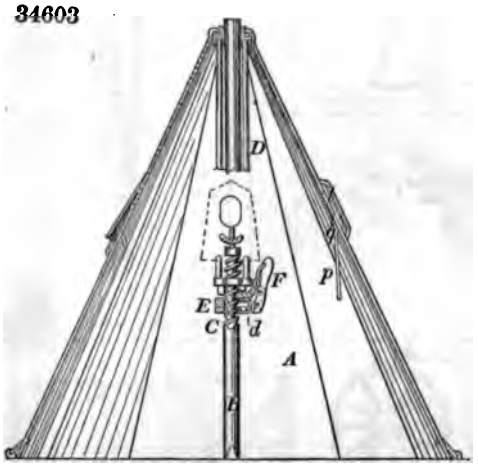

34604

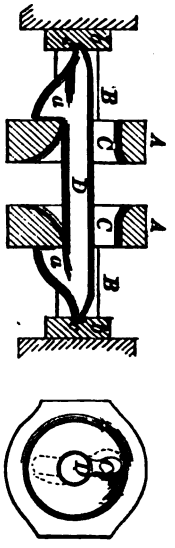

4605

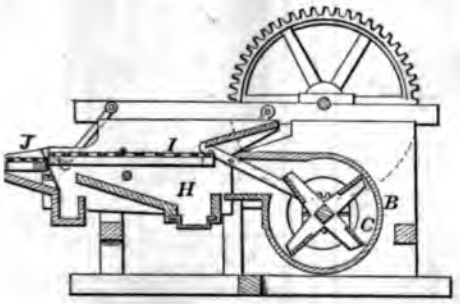

34607

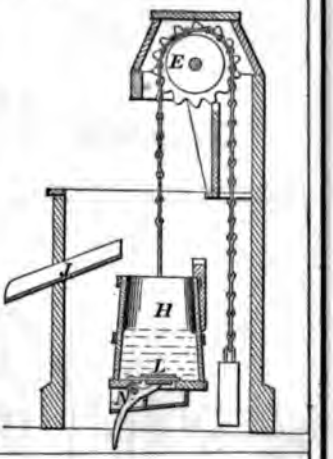

34606

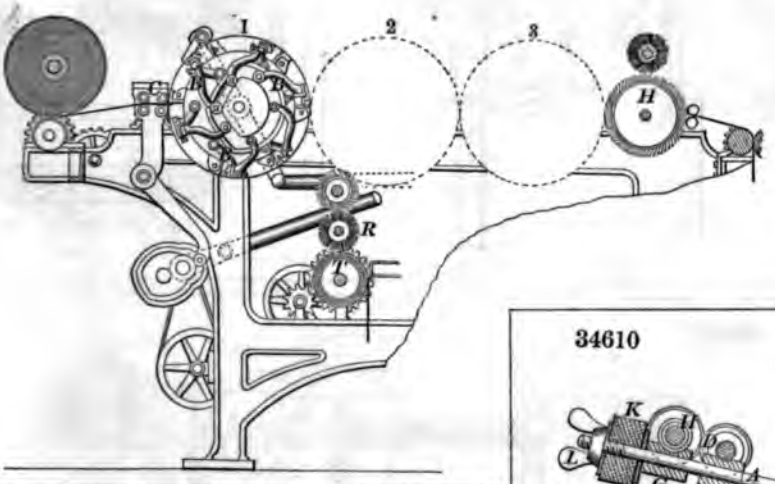

34610

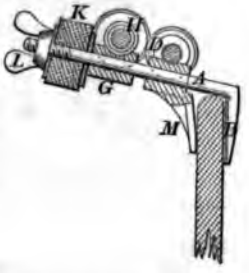

34608

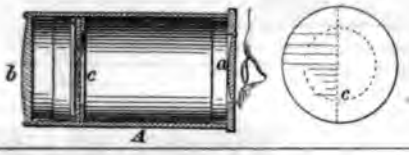

34611

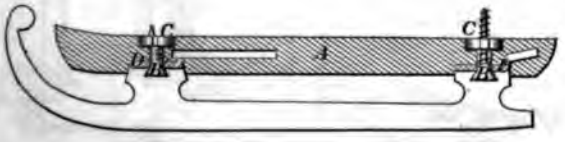

34612

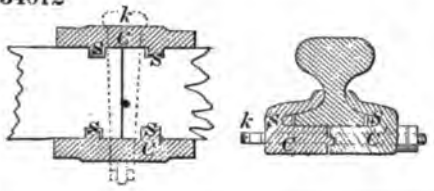

34613

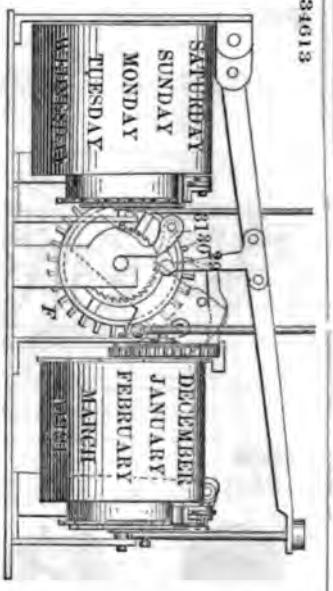

34614

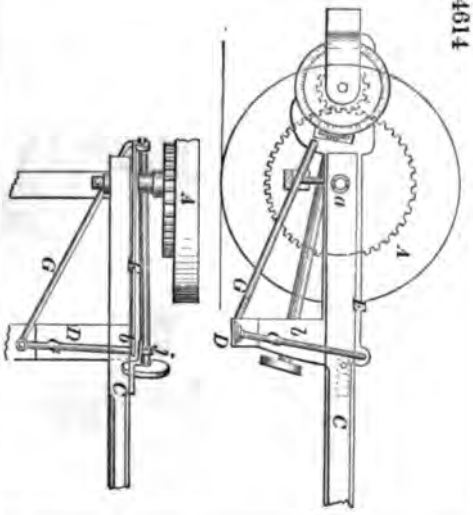

34615

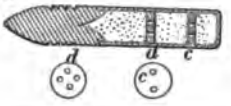

34616

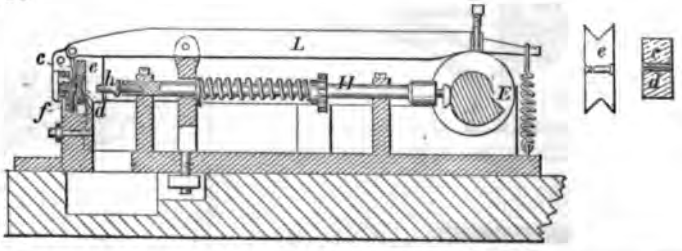

34617

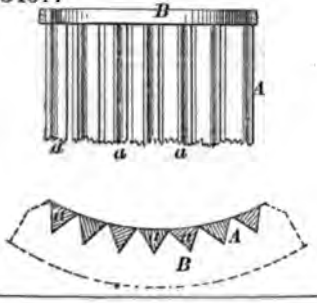

34618

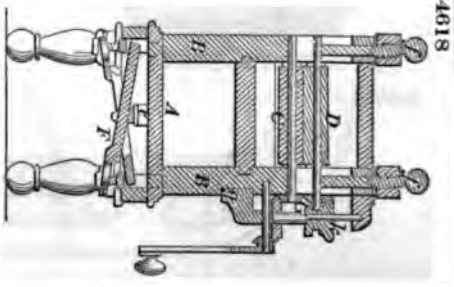

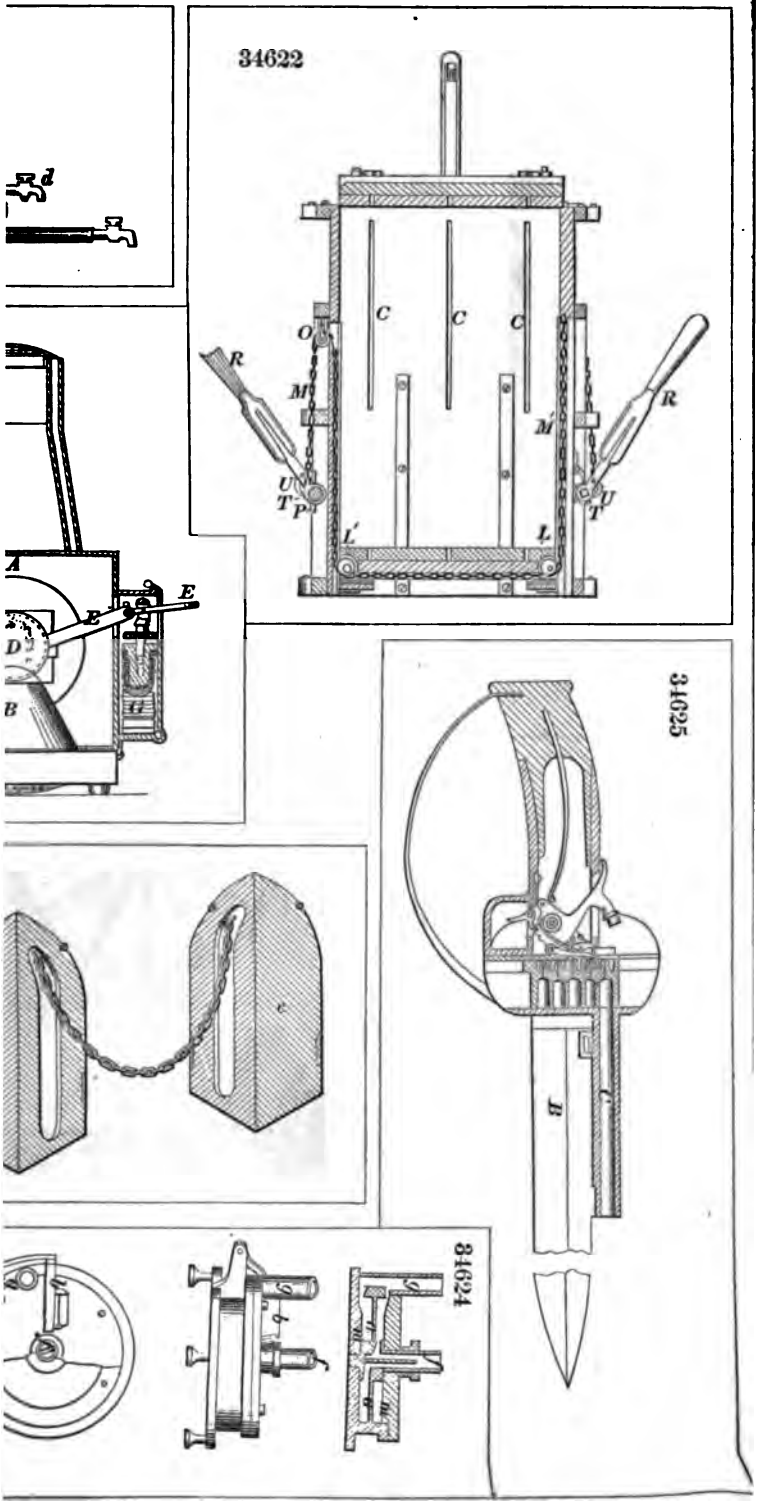
34622
34625
34624
C
C
C
O
R
M
M'
R
U
T
P
T
U
L'
L
A
E
E
D
B
G
e
B
d
b
f
c
a
m
n
o

34627

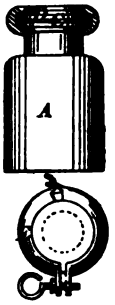

34628

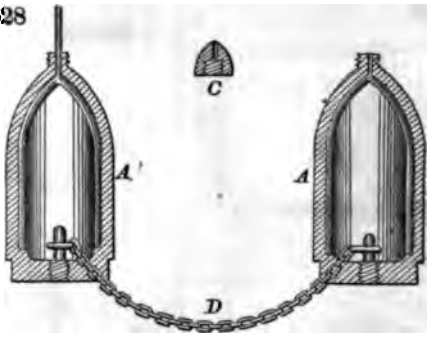

34629

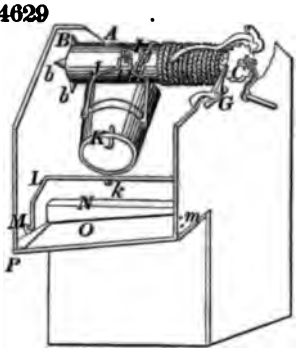

34630

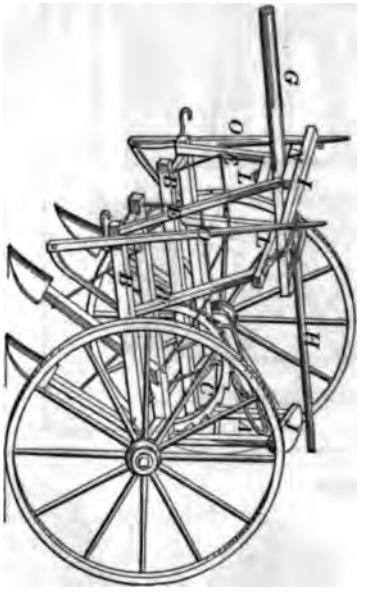

34632

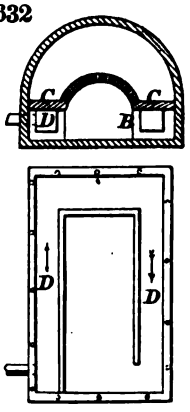

34631

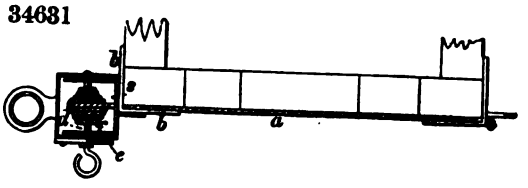

34633

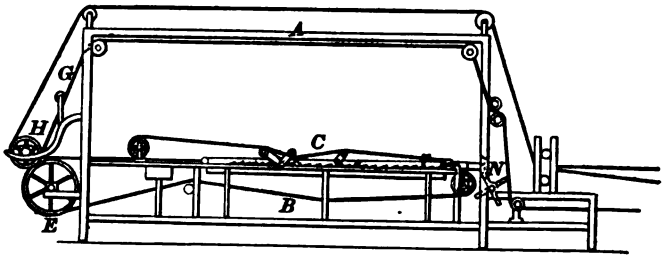

34634

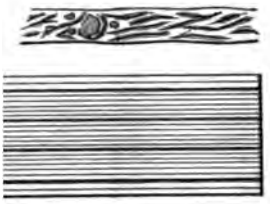

34635

34636

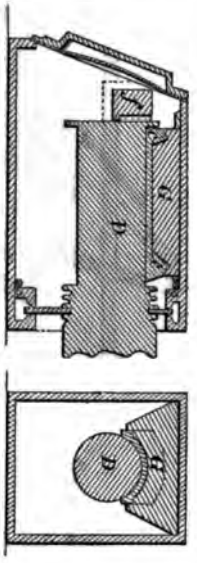

4637

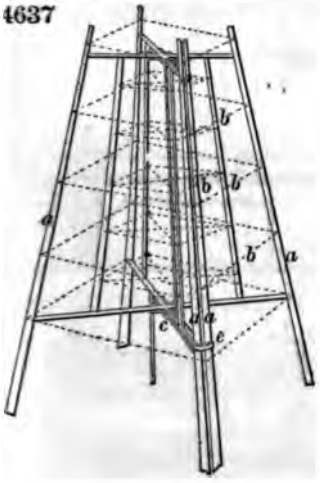

34638

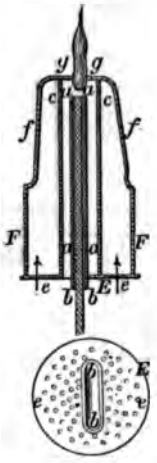

34639

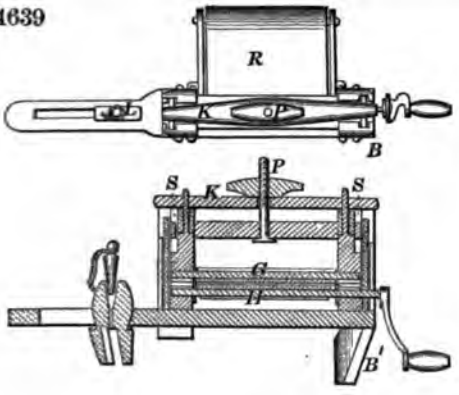

34640

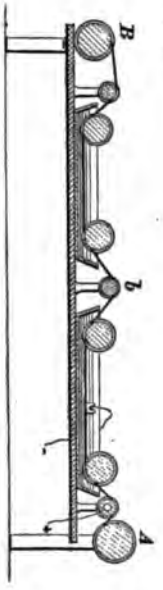

34641

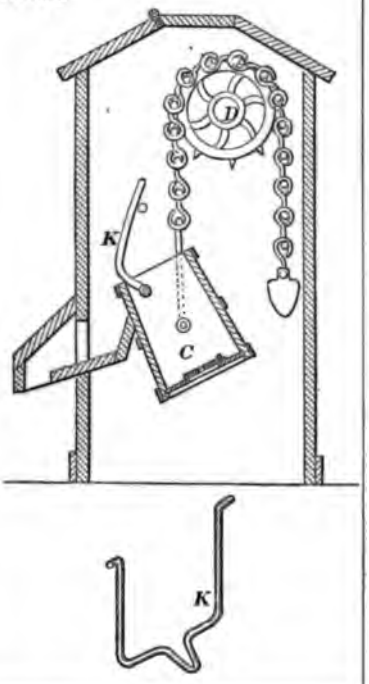

34643

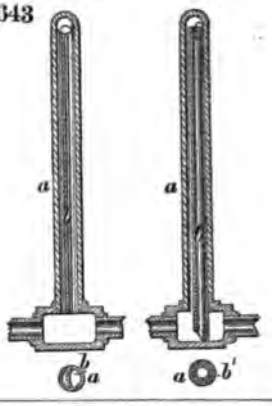

34644

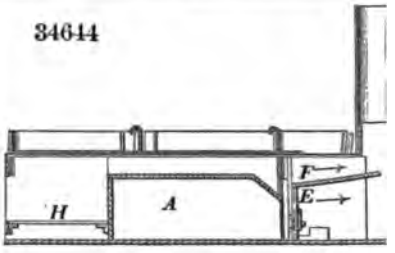

34645

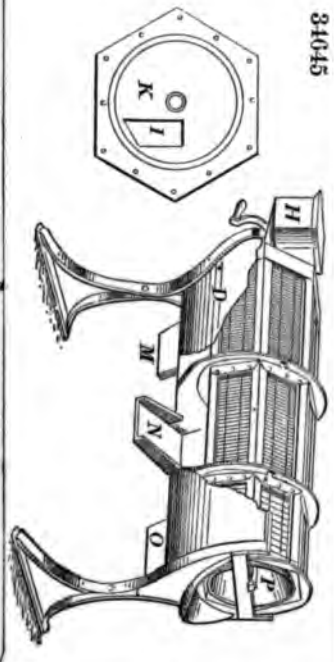

34646

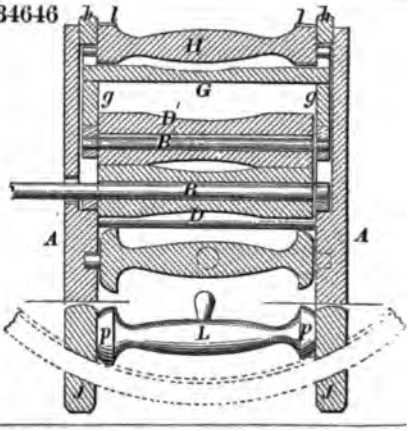

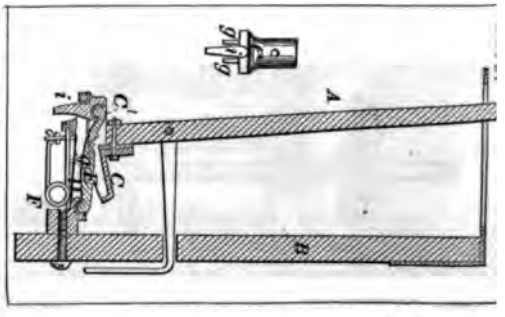

4648

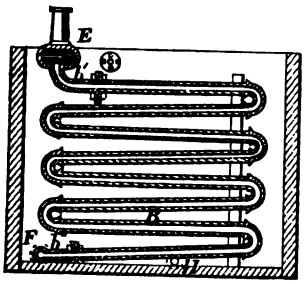

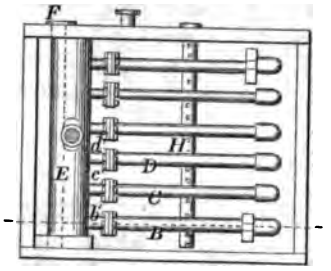

34650

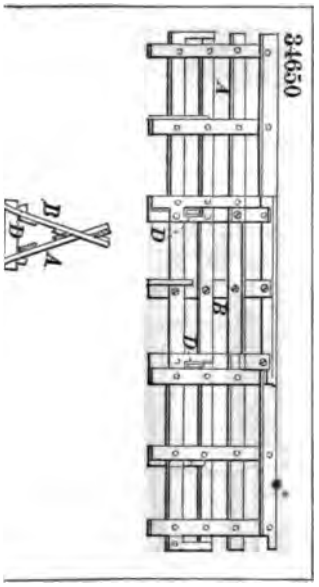

34651

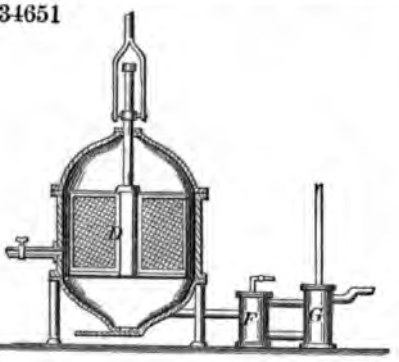

4653

34655

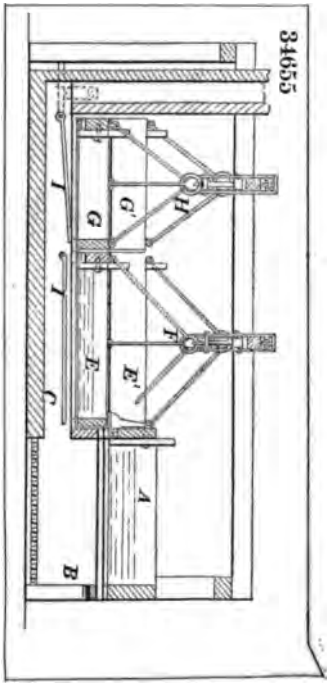

4652

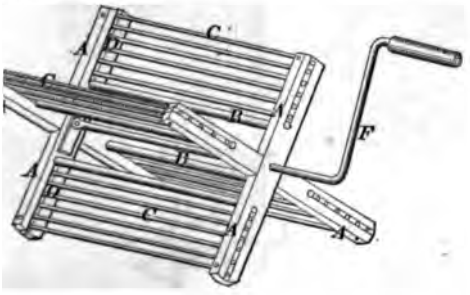

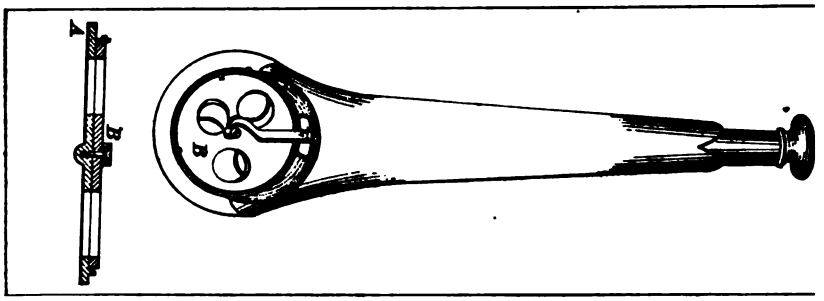

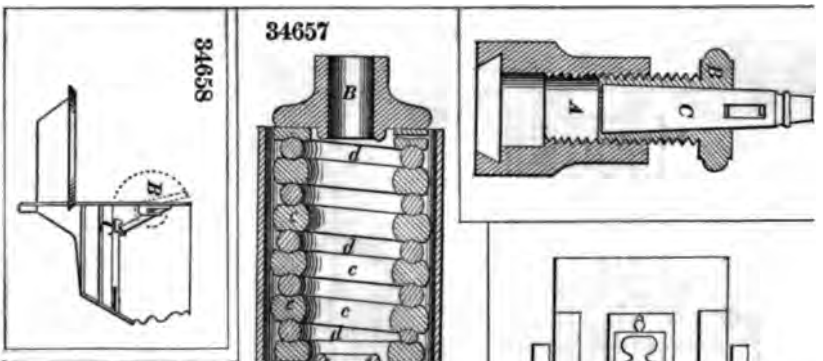
34657
34658

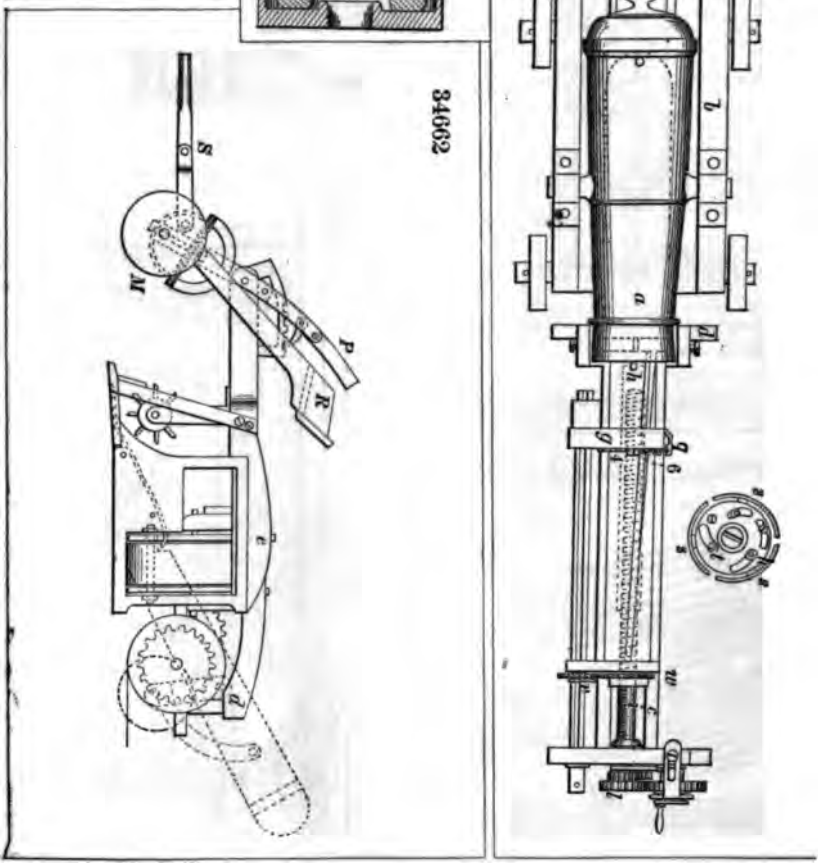
34662

34663

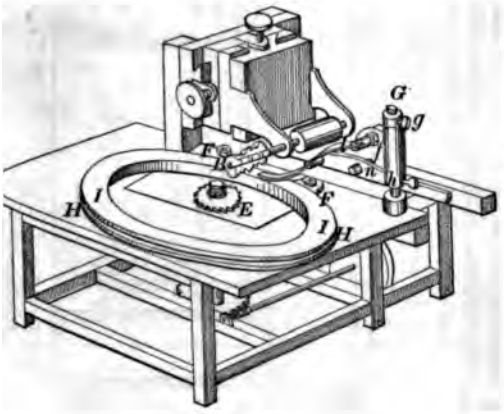

34664

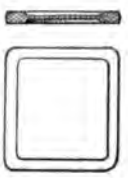

34666

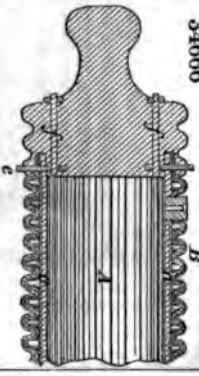

34665

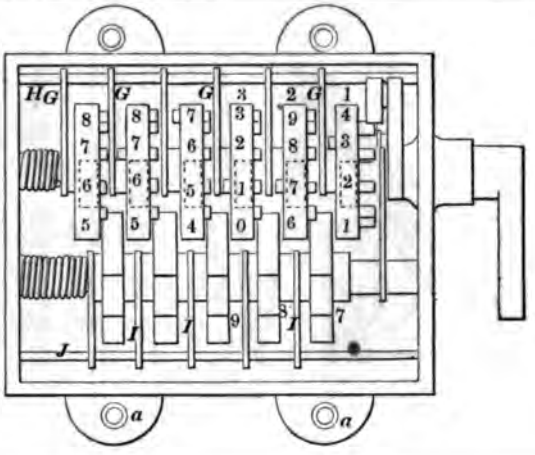

34667

34668

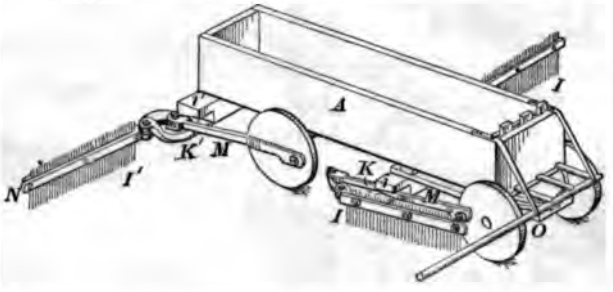

34669

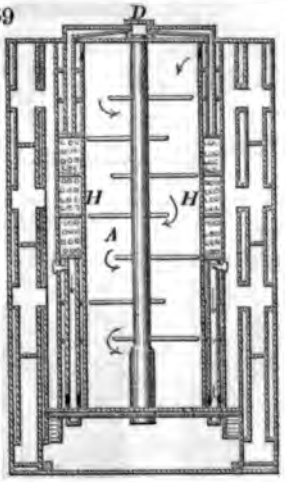

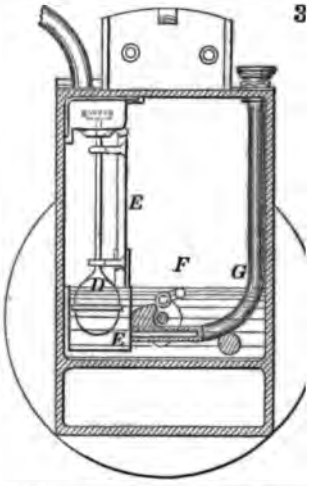

34673

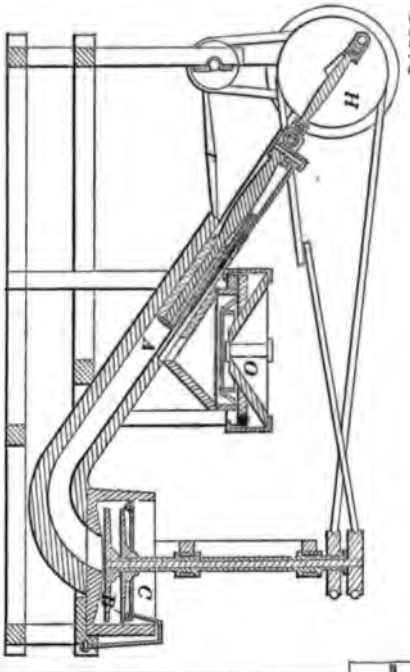

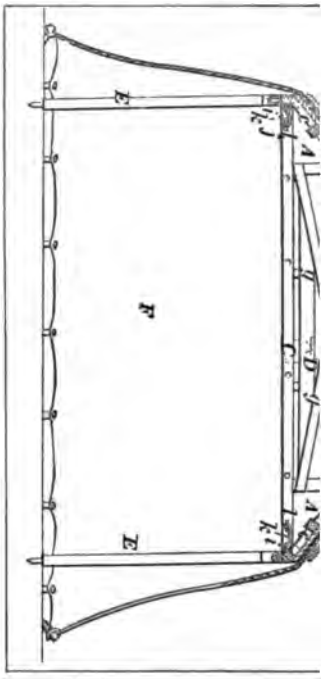

34674

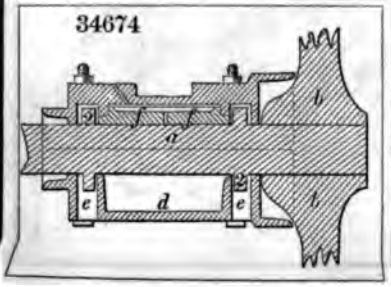

346

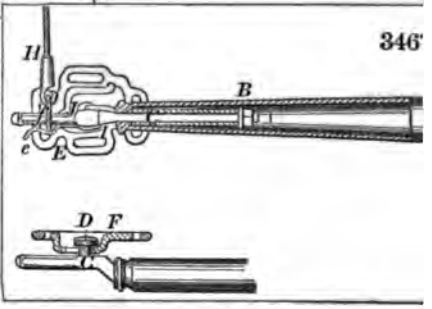

4675

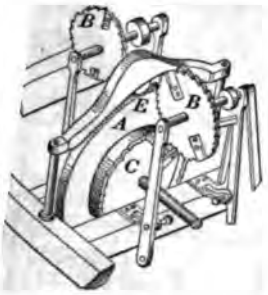

34677

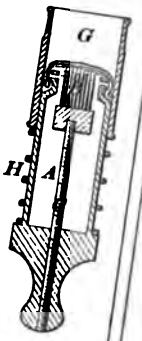

34676

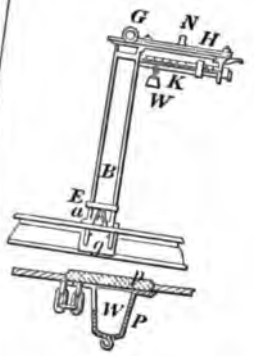

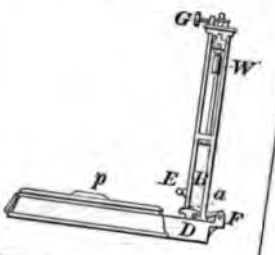

678

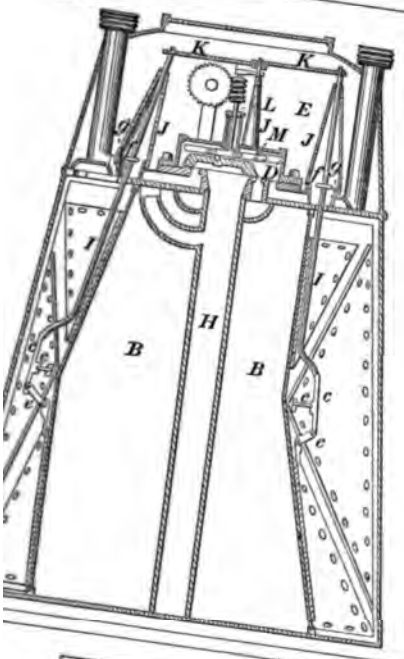

34679

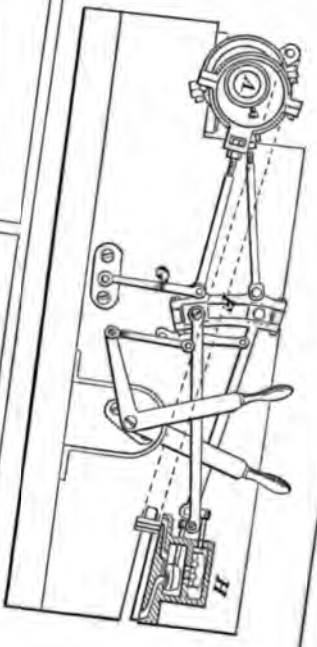

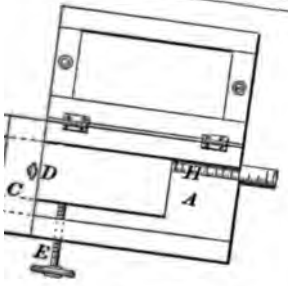

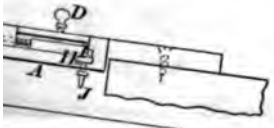

34682

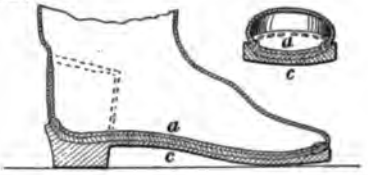

34681

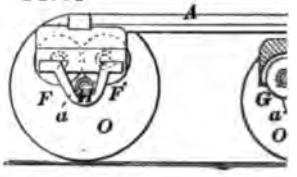

34684

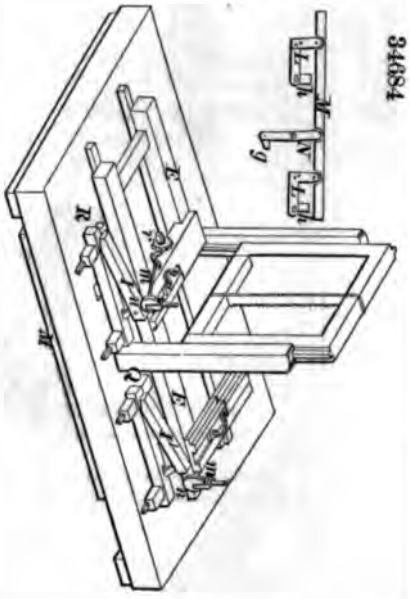

34683

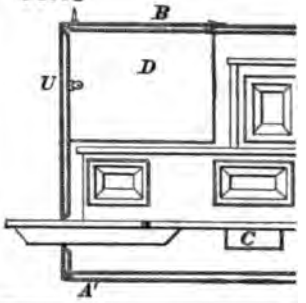

34685

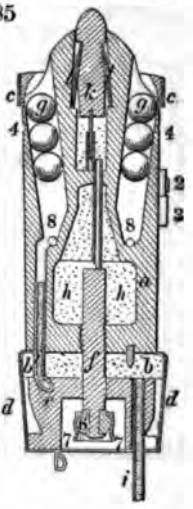

34686

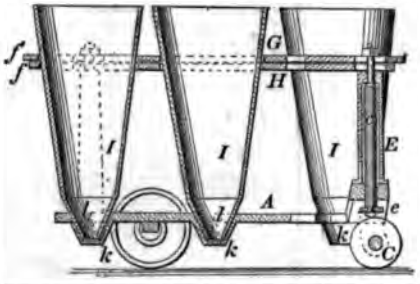

34689

34687

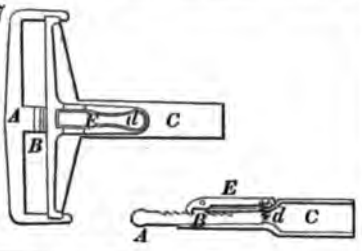

34690

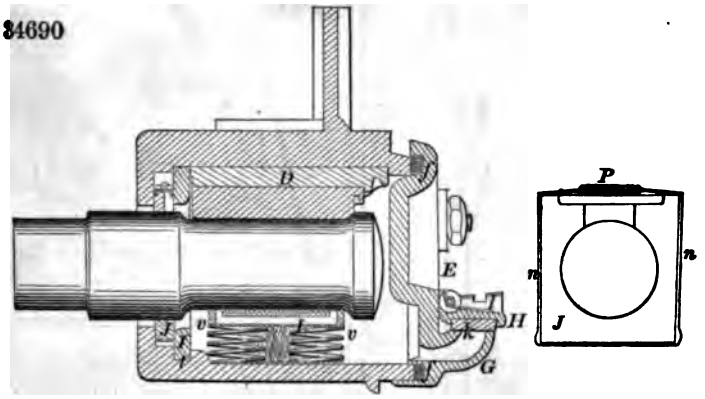

34691

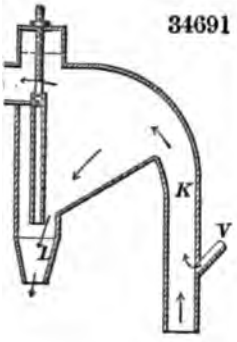

34692

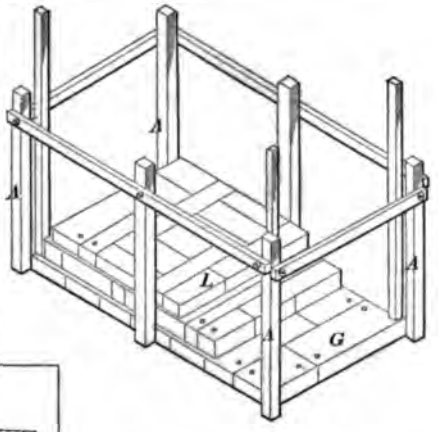

693

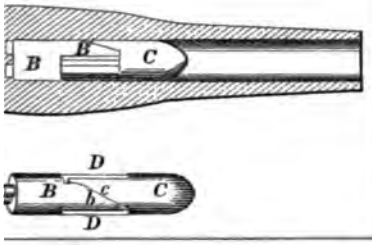

34694

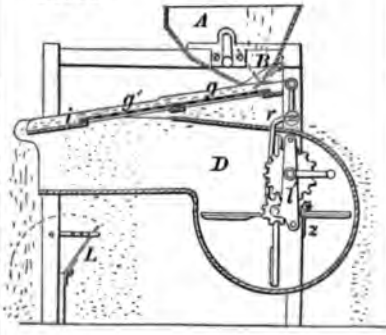

34695

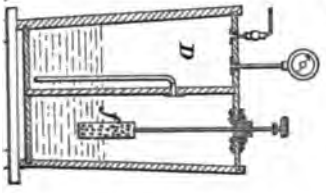

34696

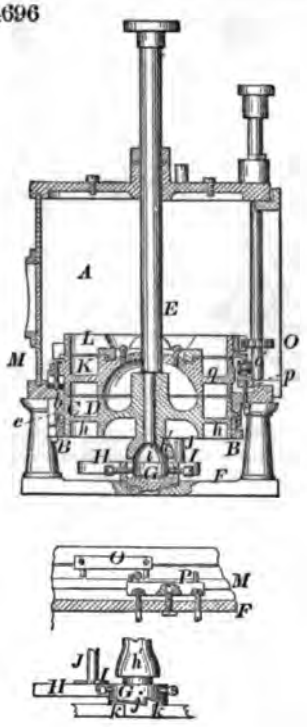

34697

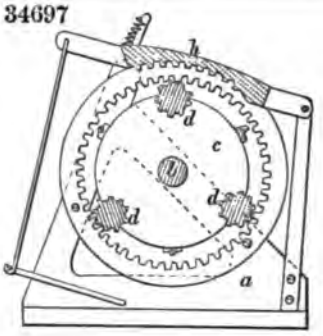

34698

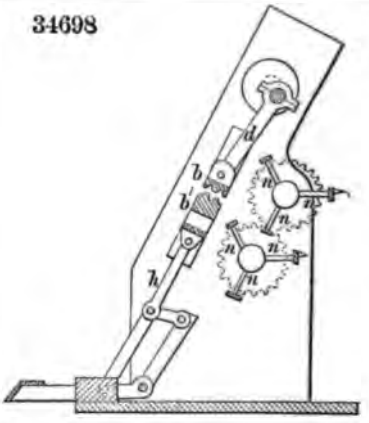

34699

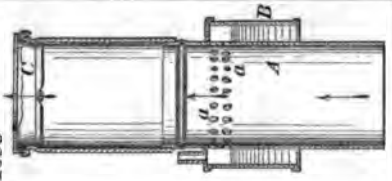

34700

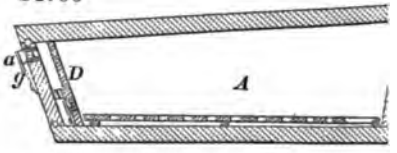

34701

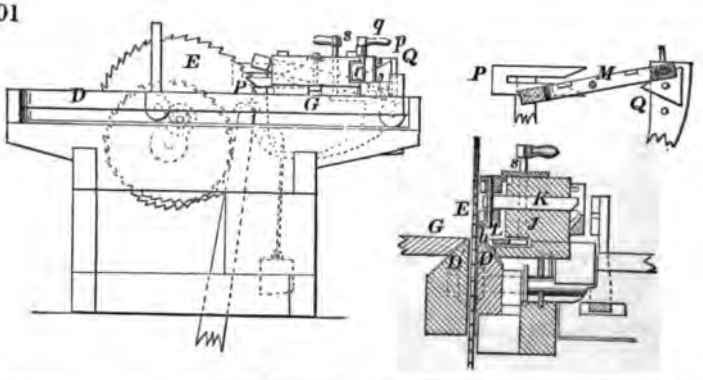

34702

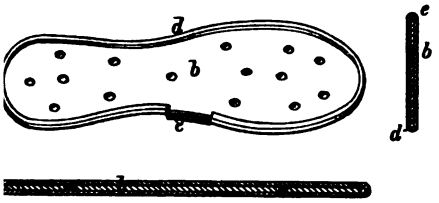

34703

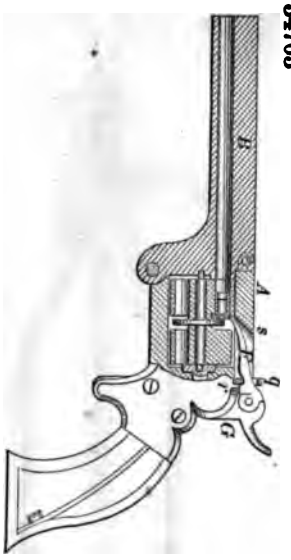

34704

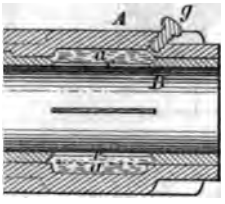

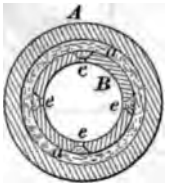

34705

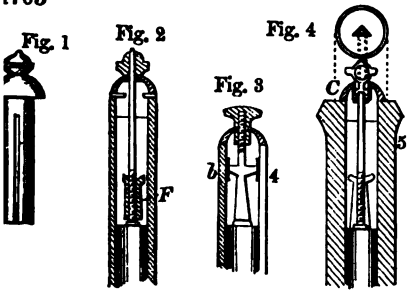

34708

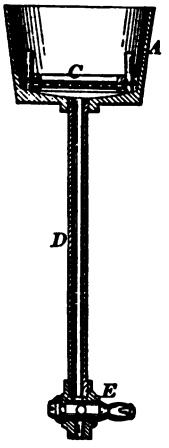

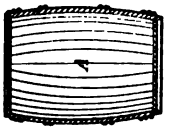

34706

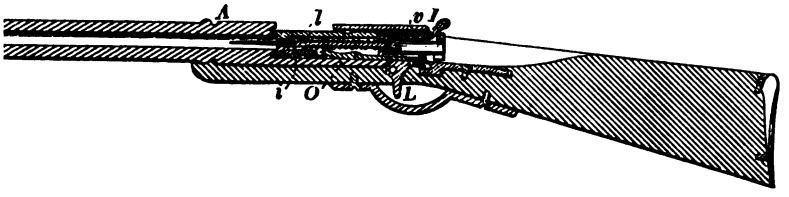

34709

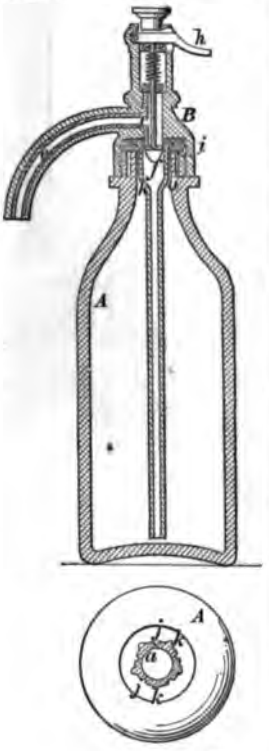

34710

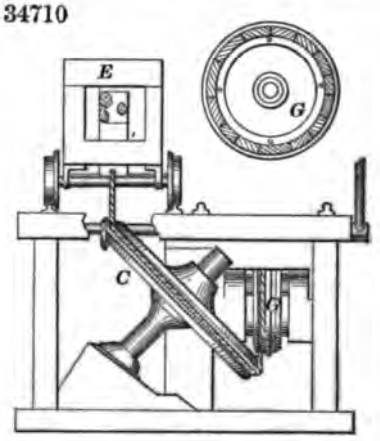

34713

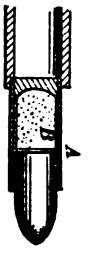

34711

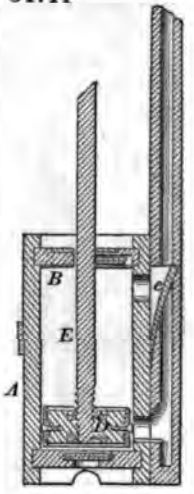

34712

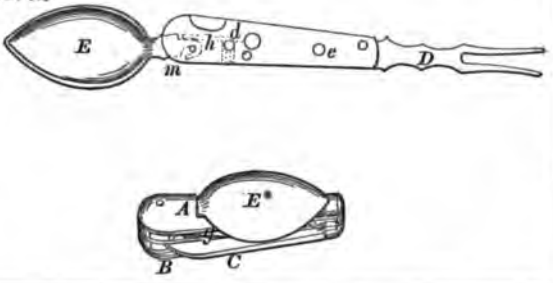

34714

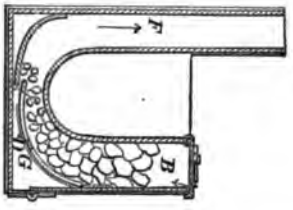

34715

34716

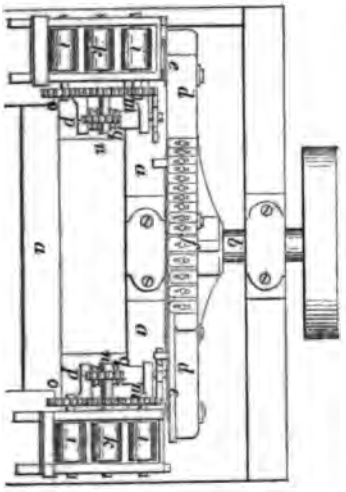

34718

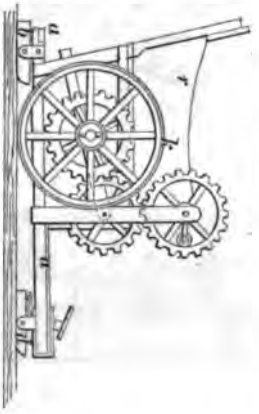

34717

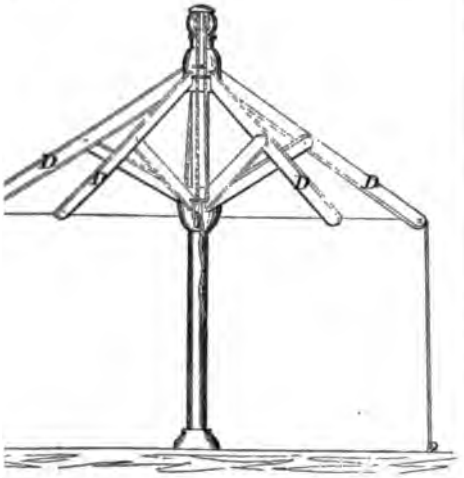

34719

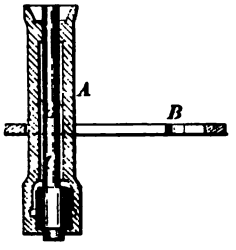

34720

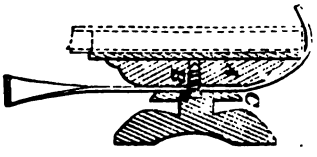

34721

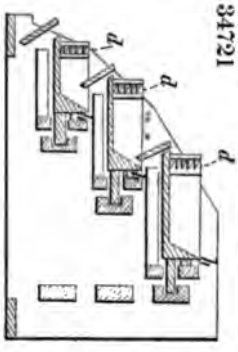

34722

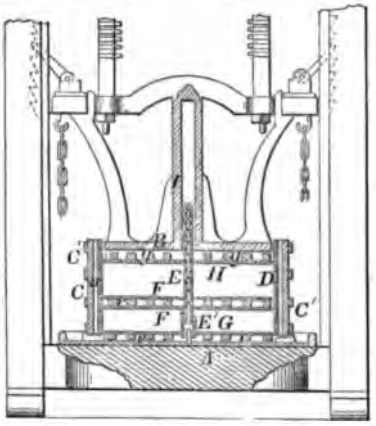

34723

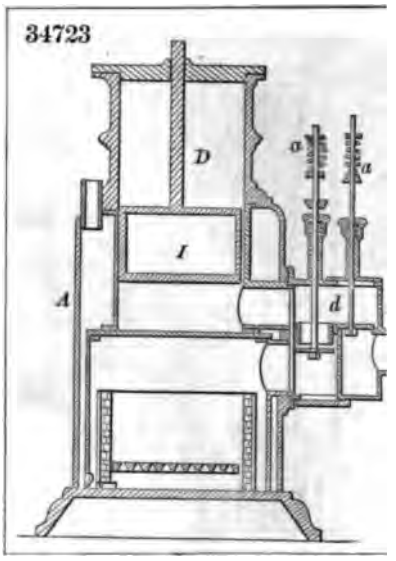

34726

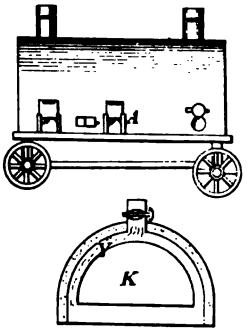

34727

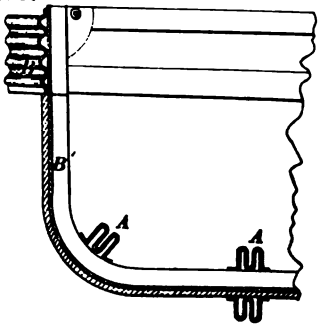

34728

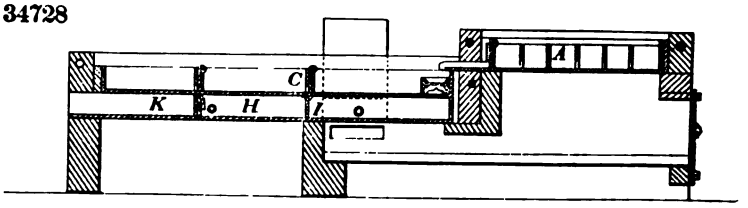

34729

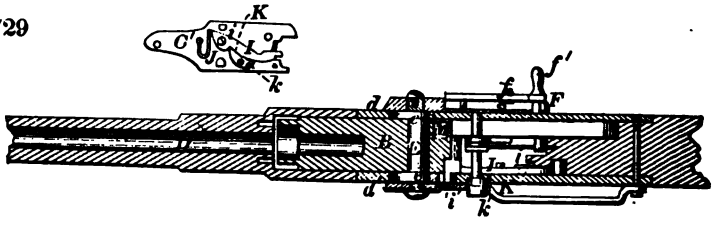

34730

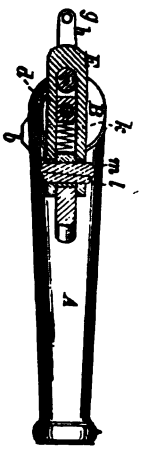

34731

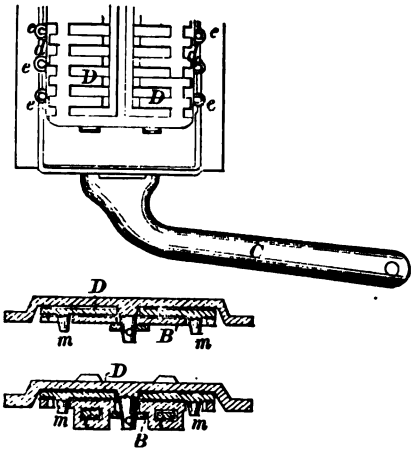

4732

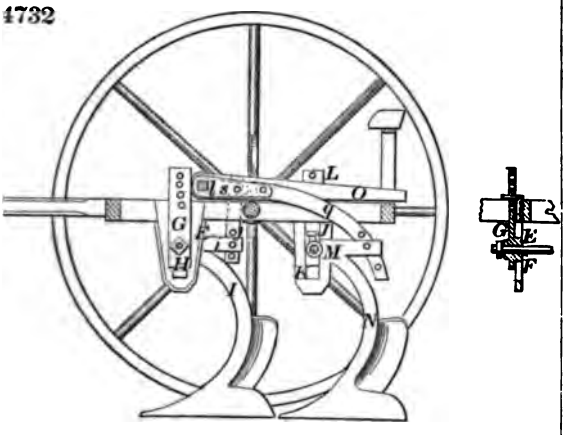

34733

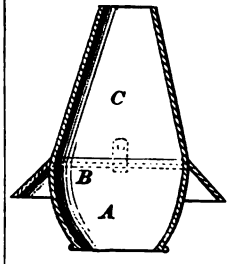

4

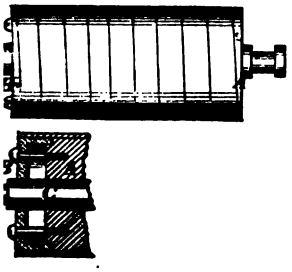

34736

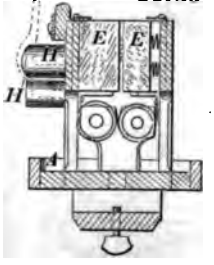

34735

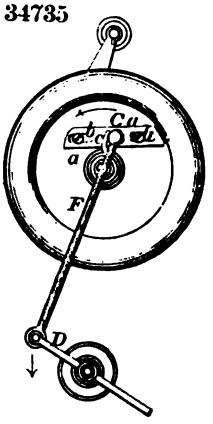

34737

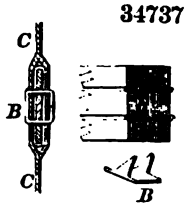

34738

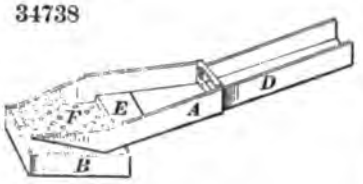

34739

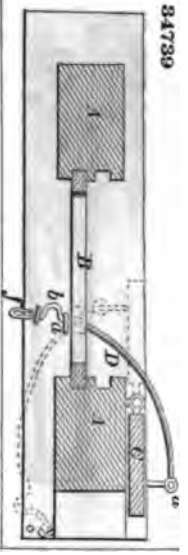

34740

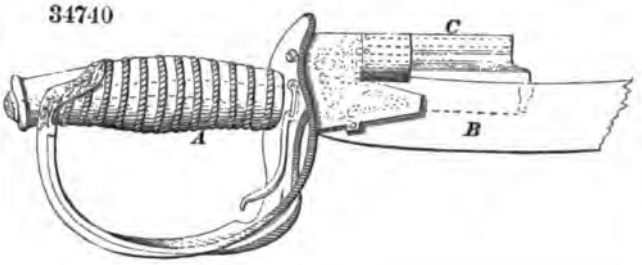

34741

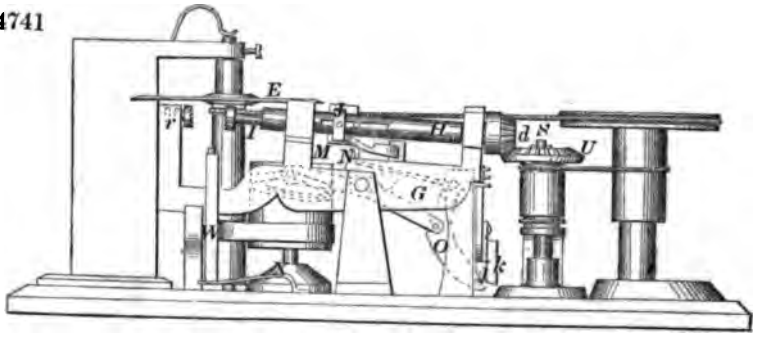

34742

34743

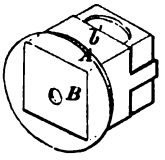

34745

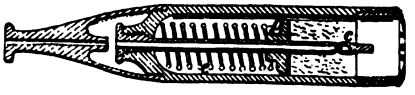

34747

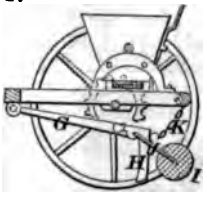

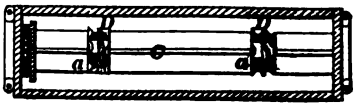

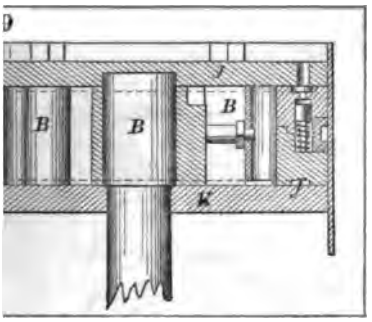
B
B
B
K

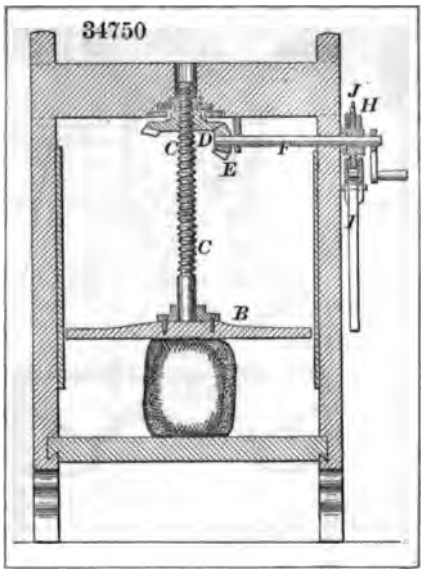
34750
J
H
C
D
E
F
C
B

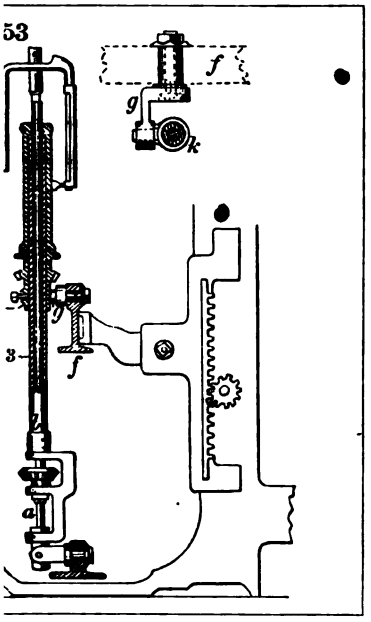
53
f
g
k
f

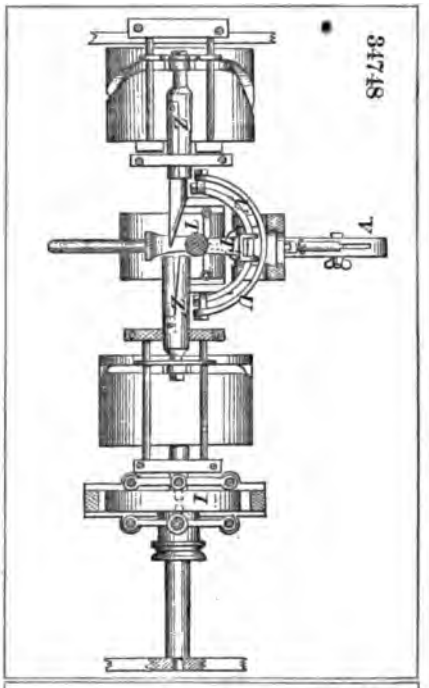
34748

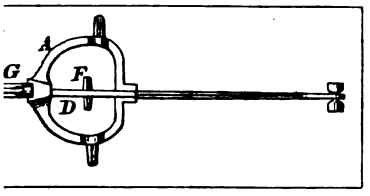
A
G
F
D

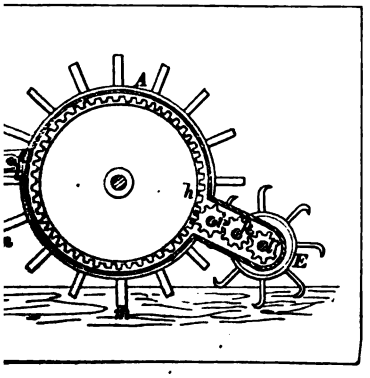
A
h
E

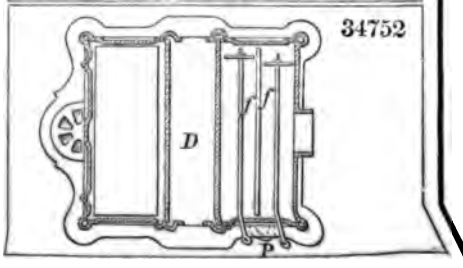
34752
D
P

34756

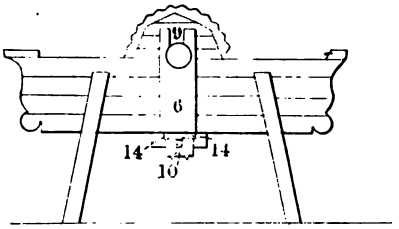

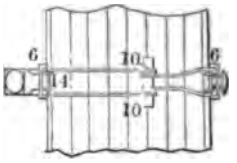

34755

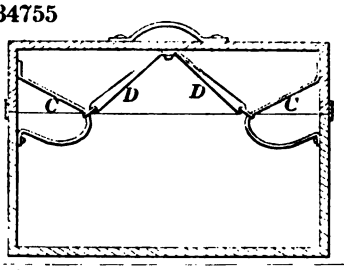

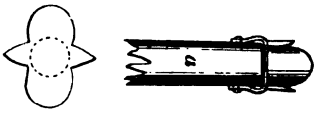

34760

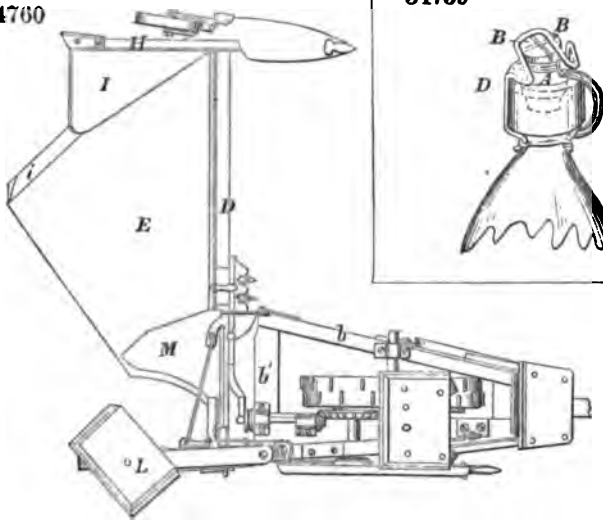

34759

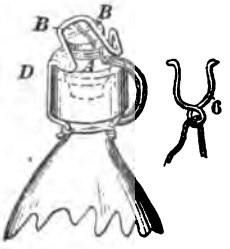

34761

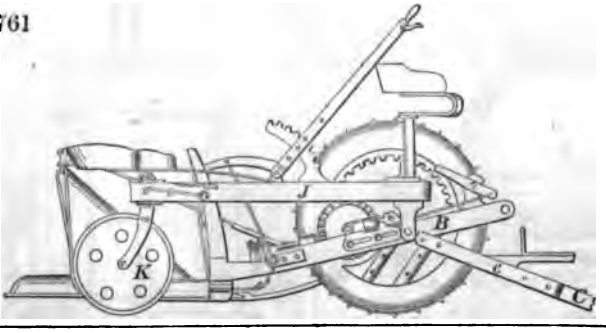

34762

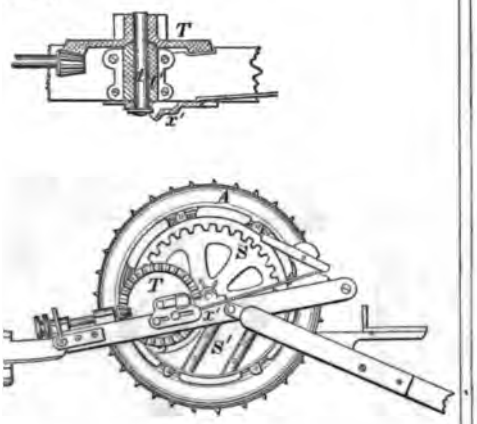

34763

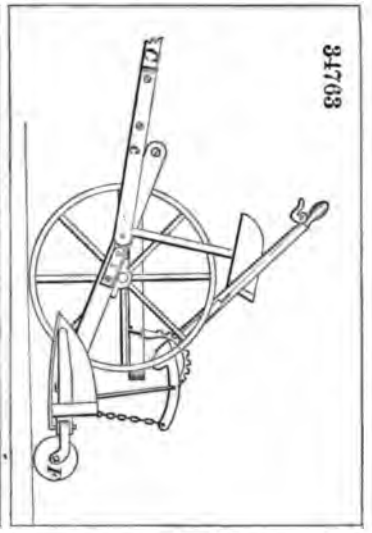

34764

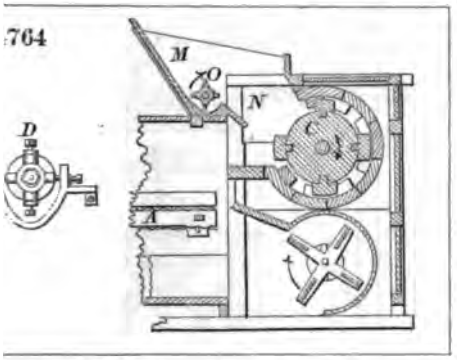

34765

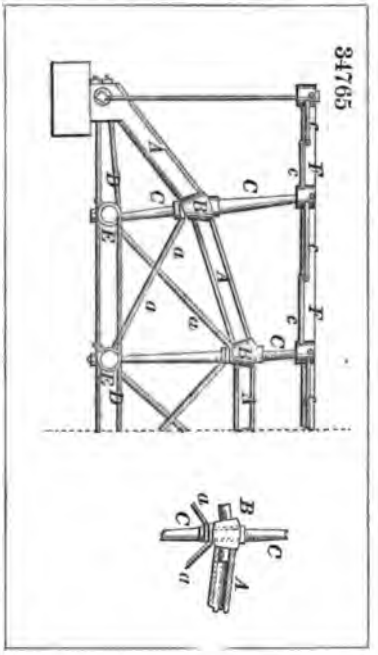

34766

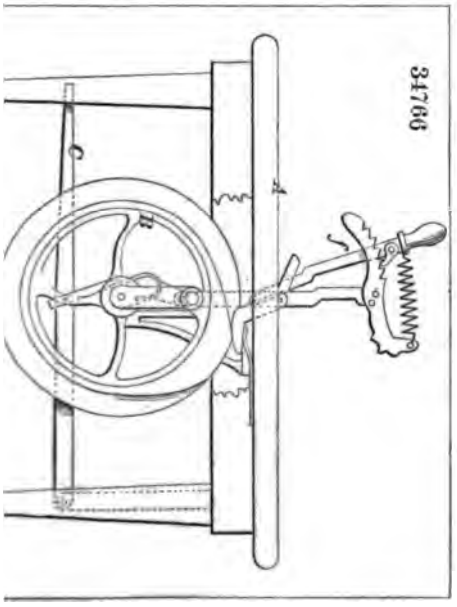

34767

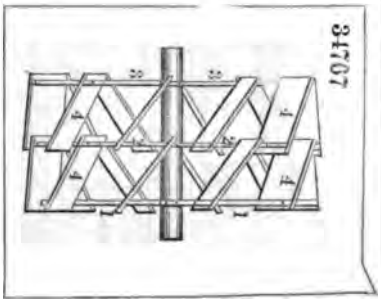

34768

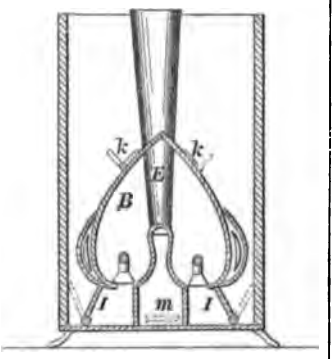

34769

34770

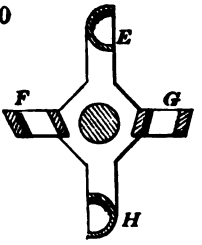

34771

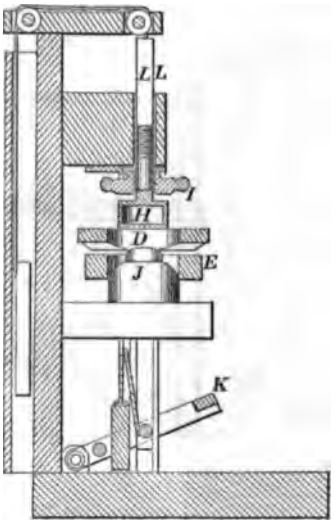

34773

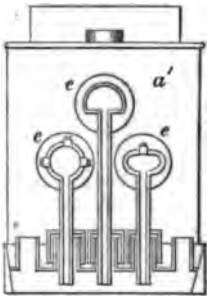

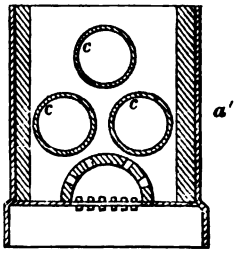

34774

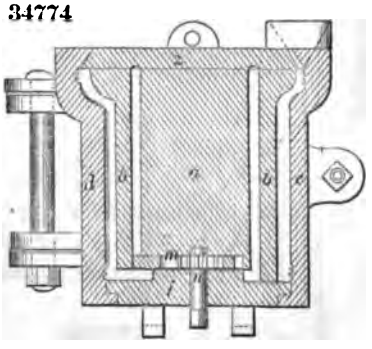

34775

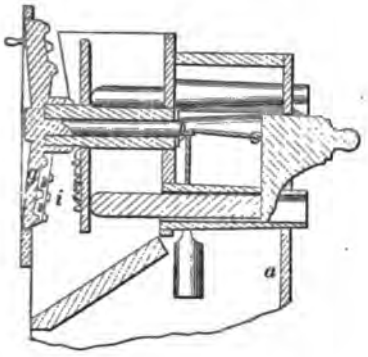

34778

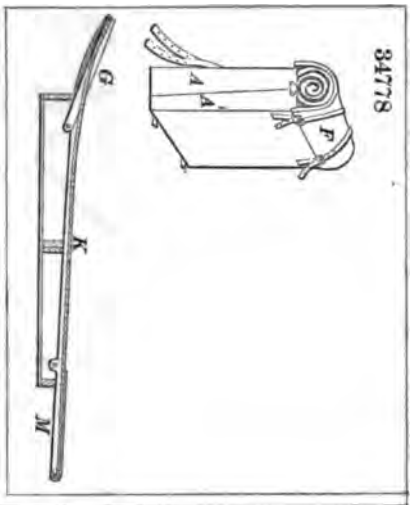

34777

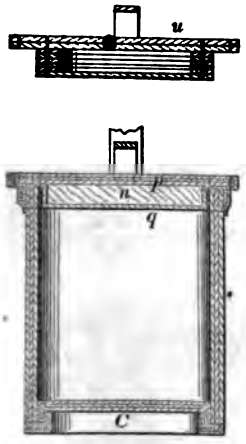

34776

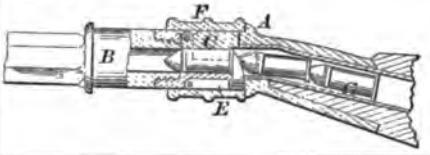

34779

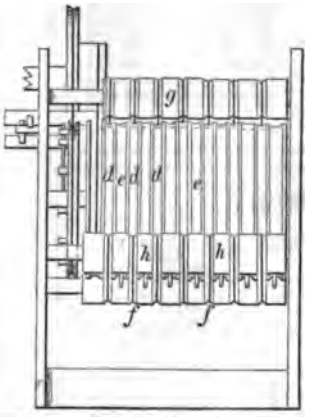

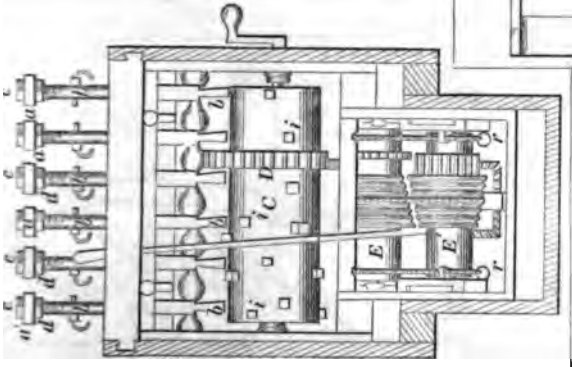

34781

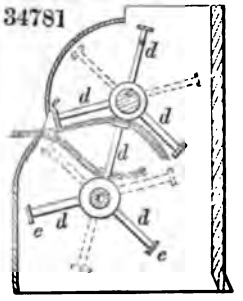

34783

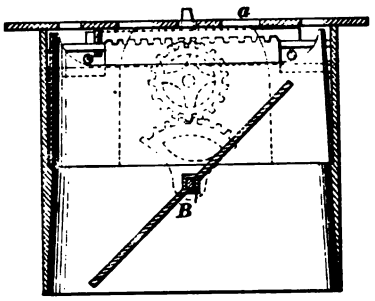

34782

34784

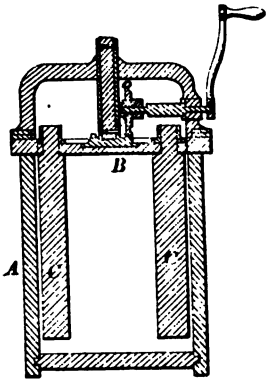

34785

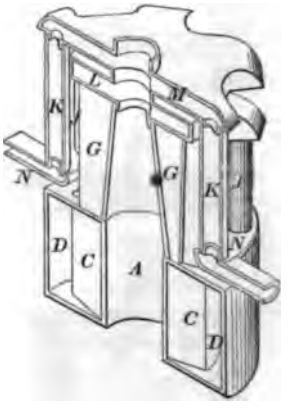

34786

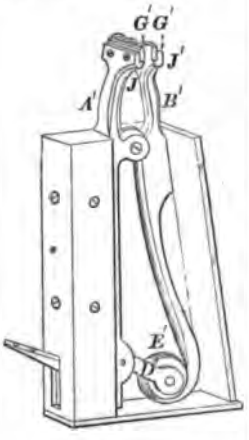

34787

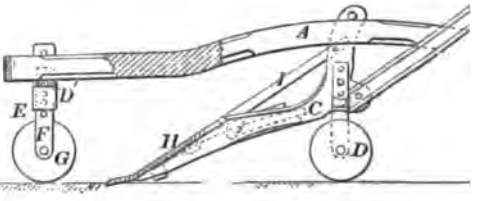

34789

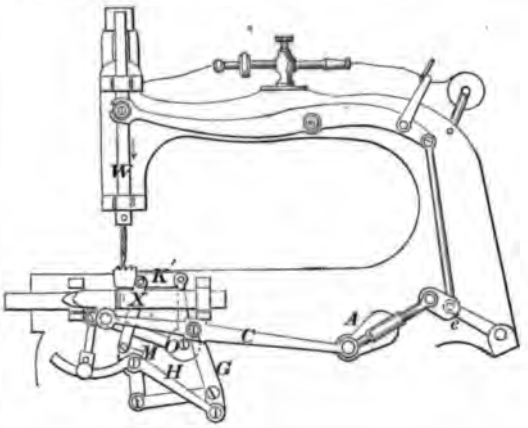

'90

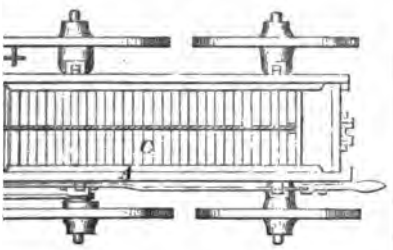

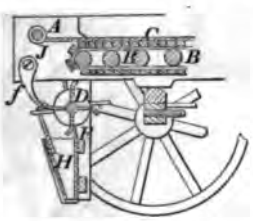

34791

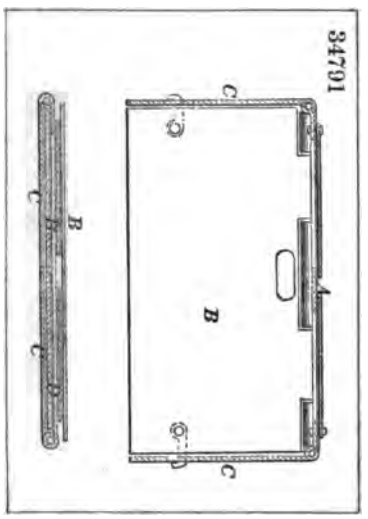

34793

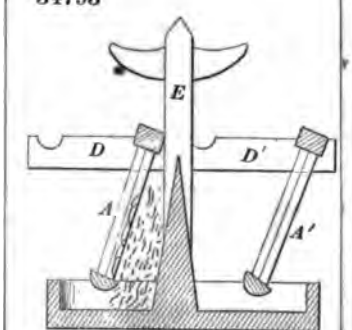

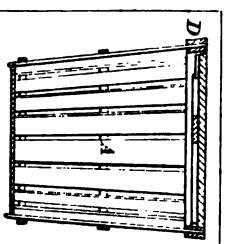

34792

34794

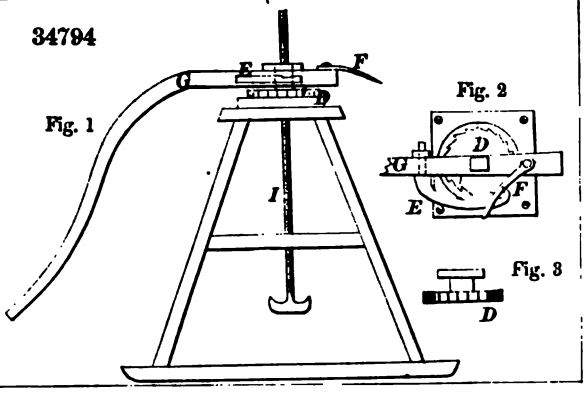

34795

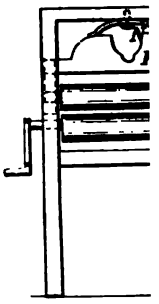

34797

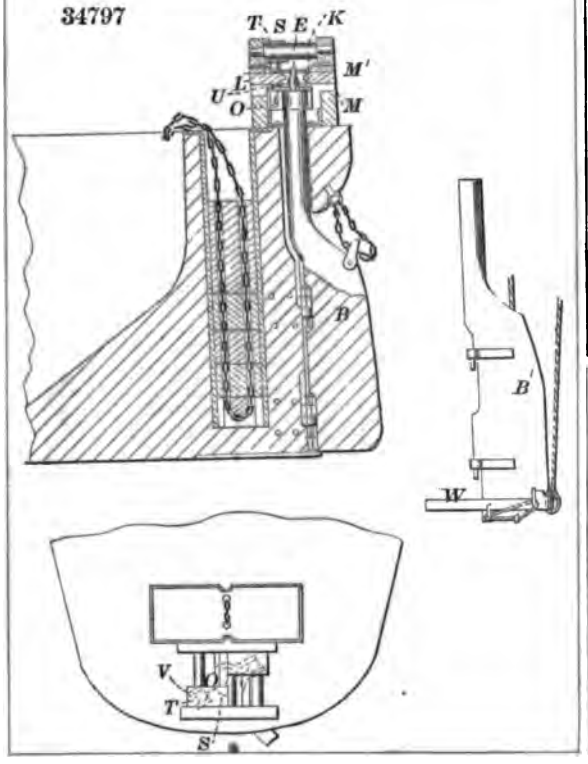

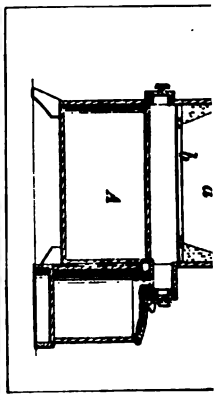

34798

34799

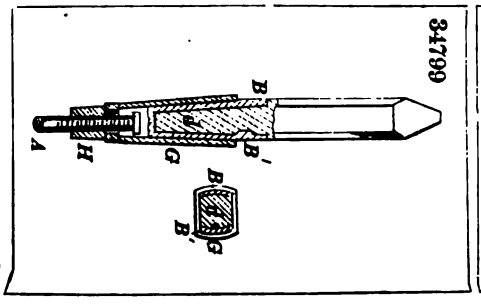

34800

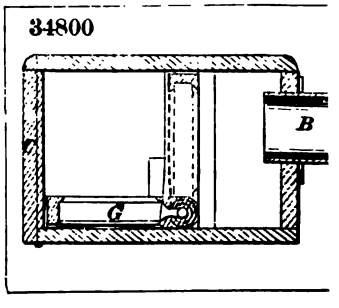

34801

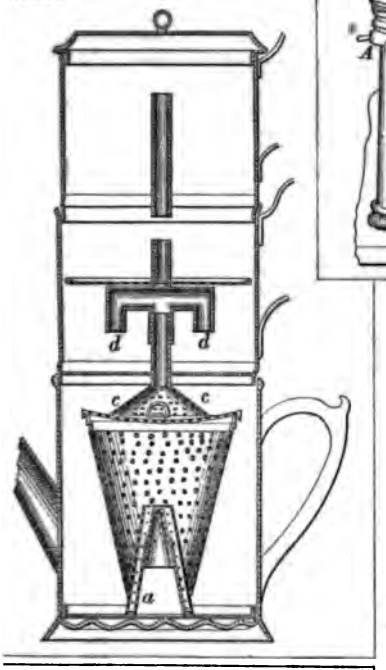

34802

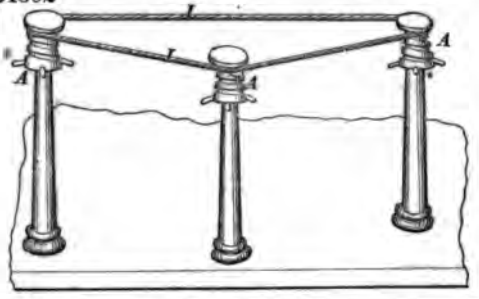

34803

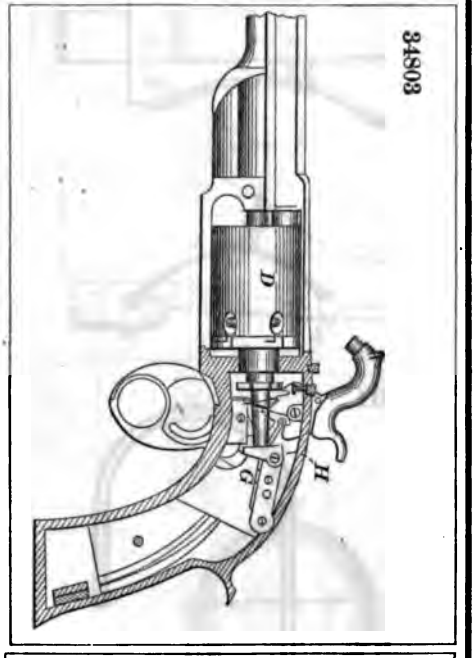

34804

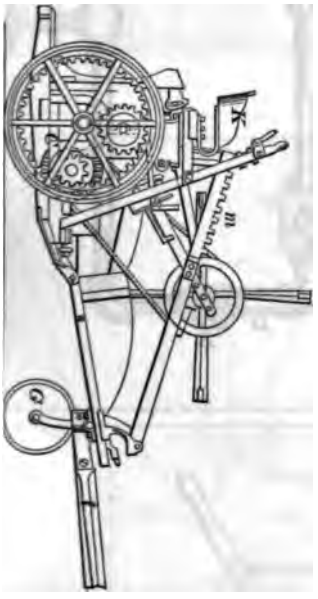

34805

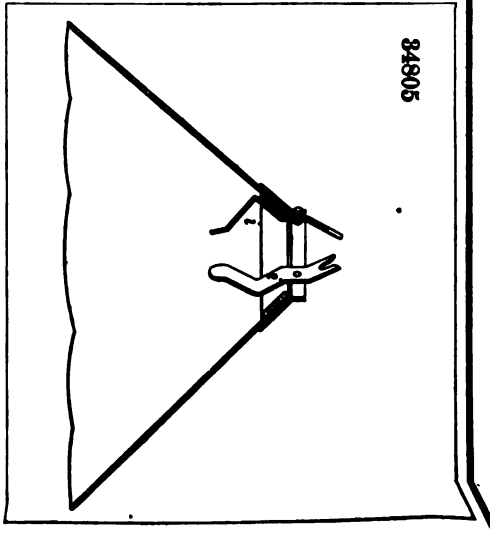

34806

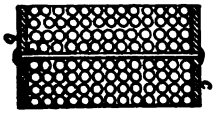

34807

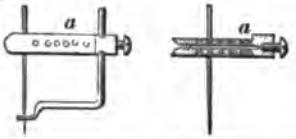

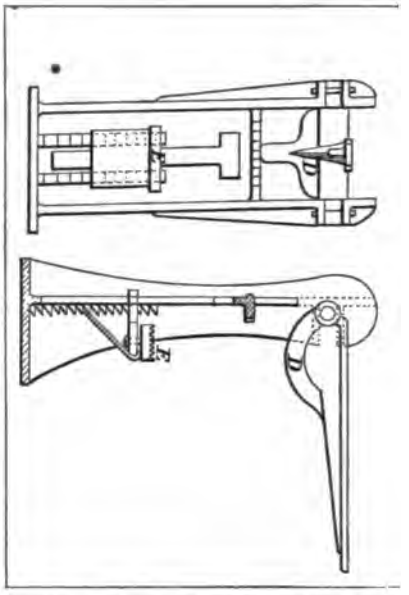

34809

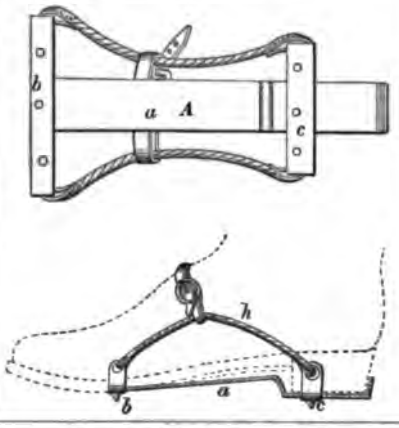

34810

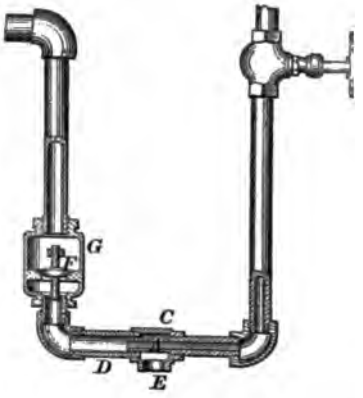

34811

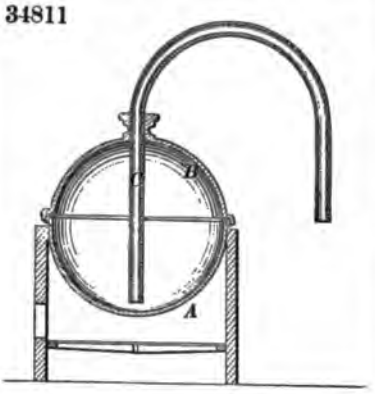

34812

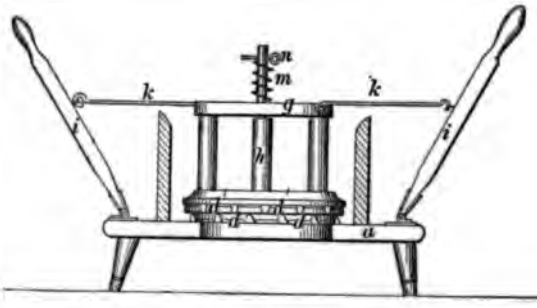

34813

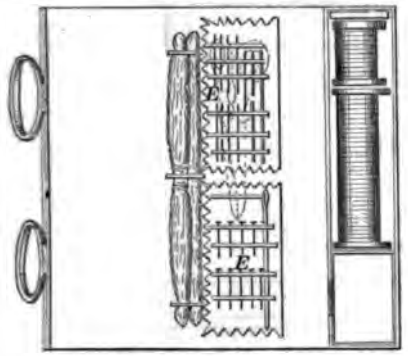

34814

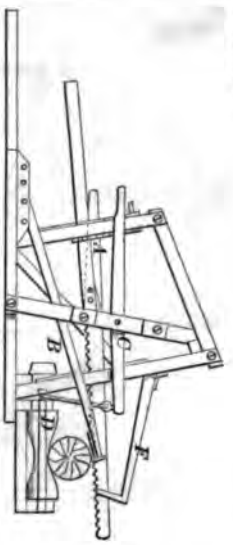

34815

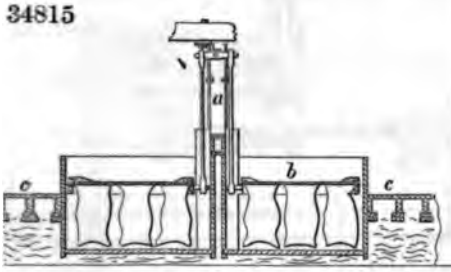

34816

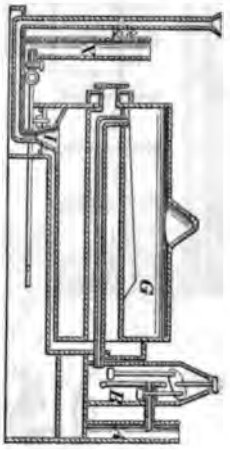

34819

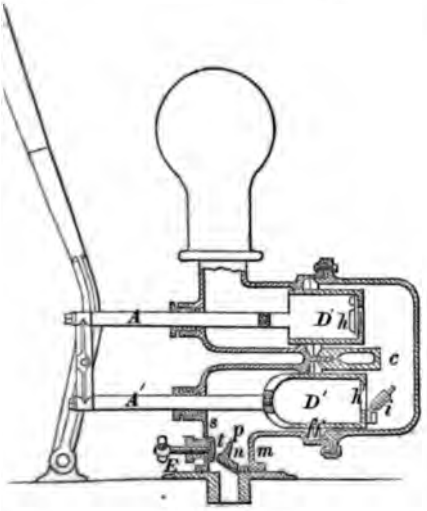

34820

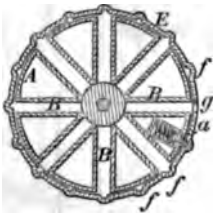

34821

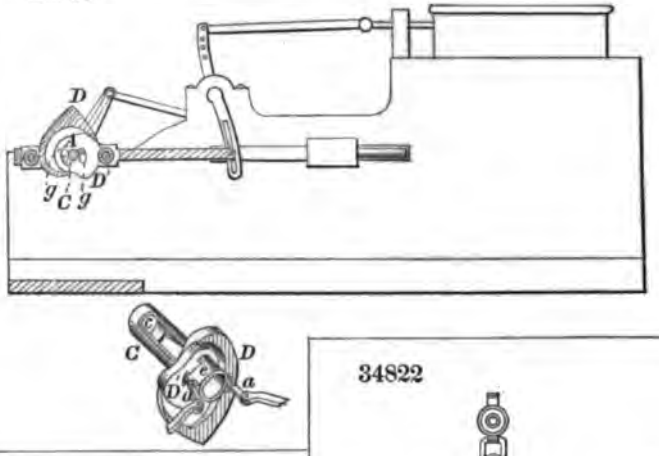

34822

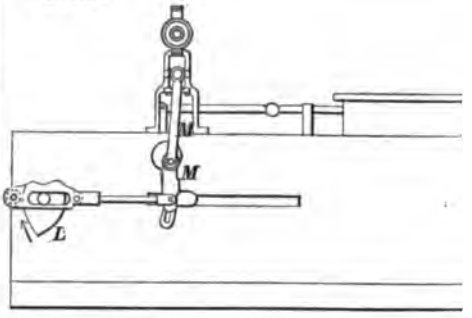

34823

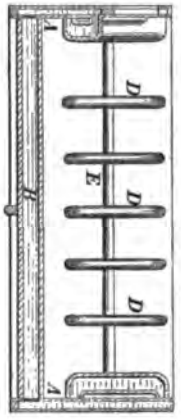

34824

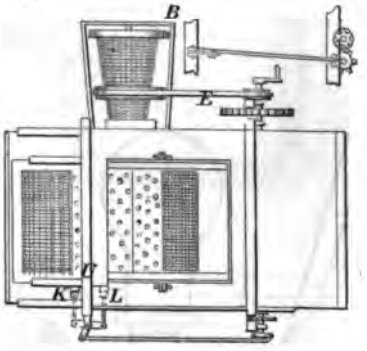

34826

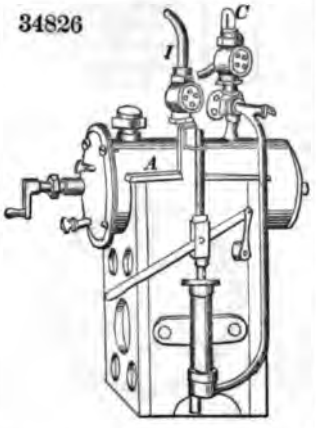

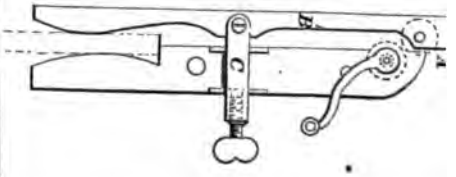

34828

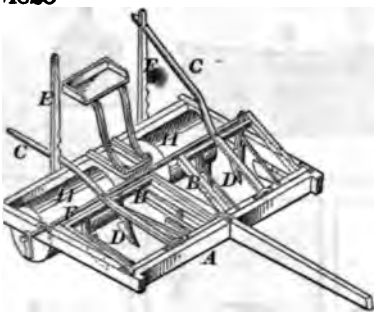

34829

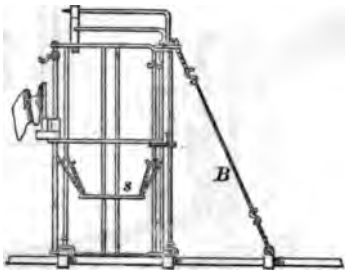

830

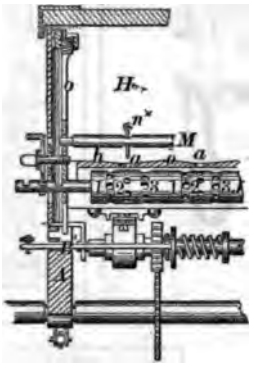

34831

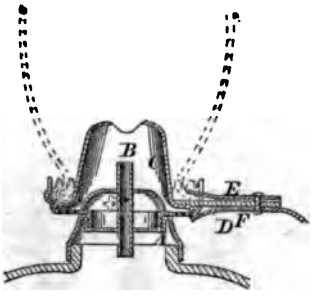

4832

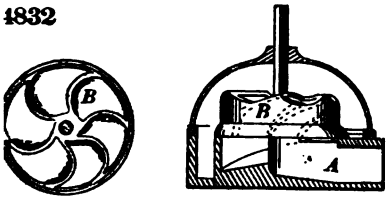

34833

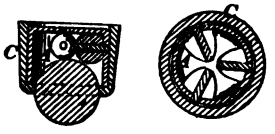

34834

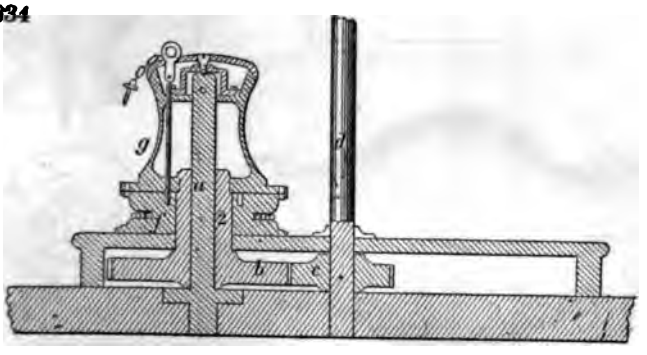

34836

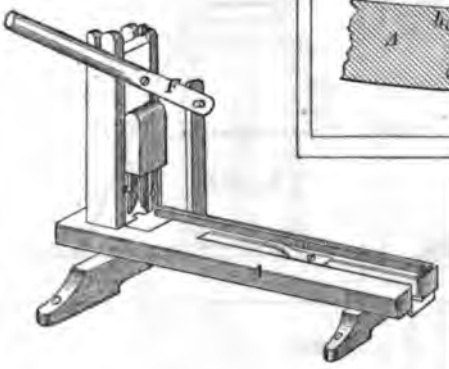

34835

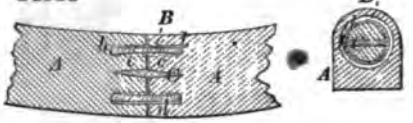

34838

34837

34839

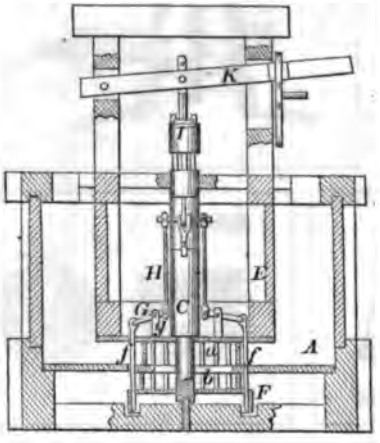

34841

34842

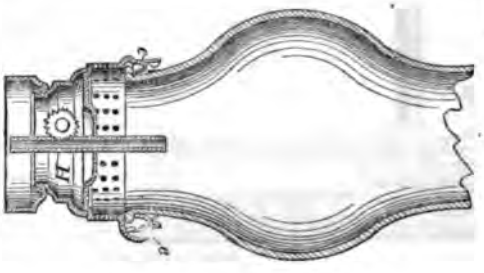

34843

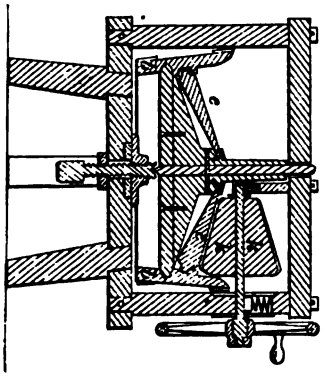

34844

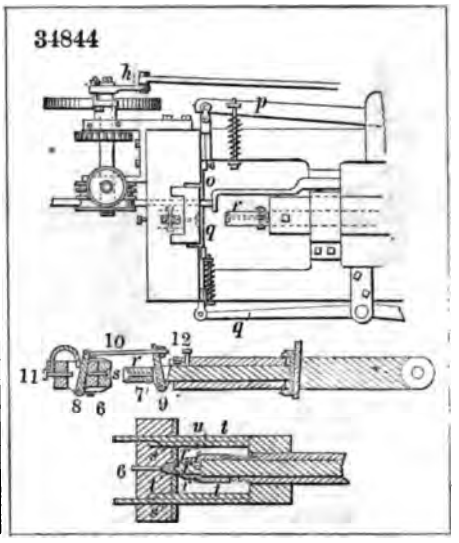

34845

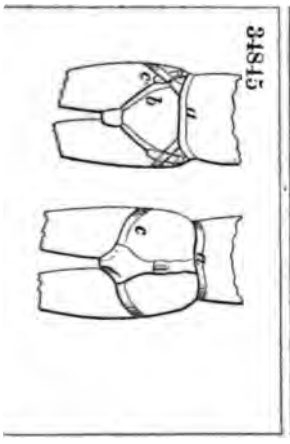

34846

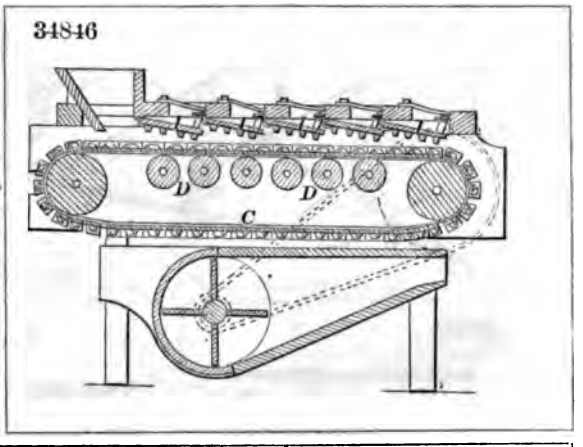

34847

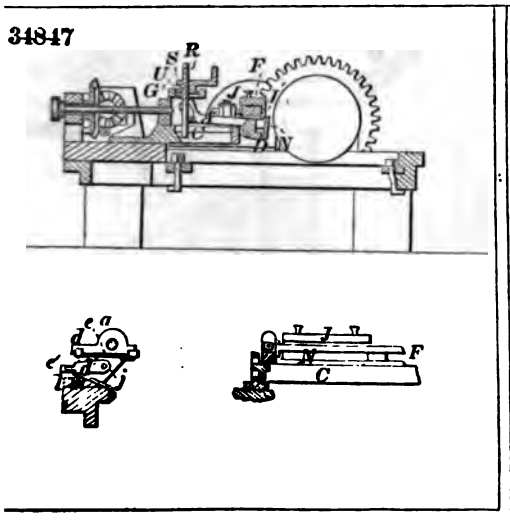

34848

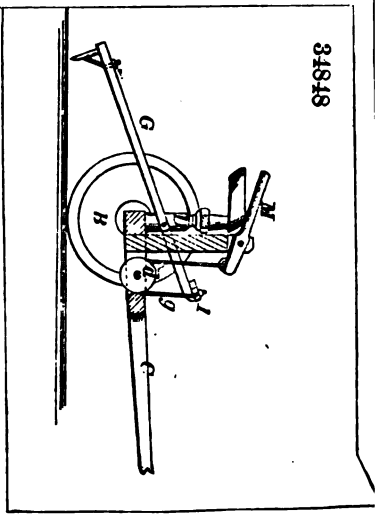

34849

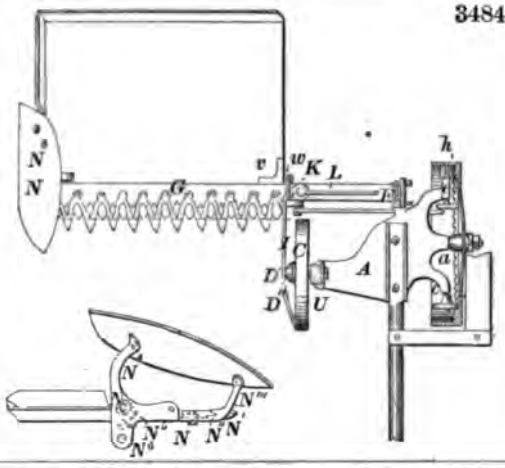

34850

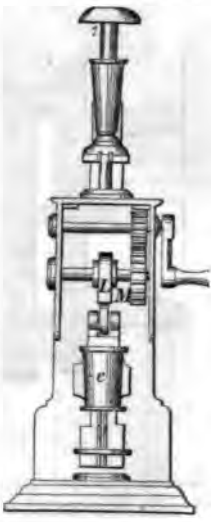

34851

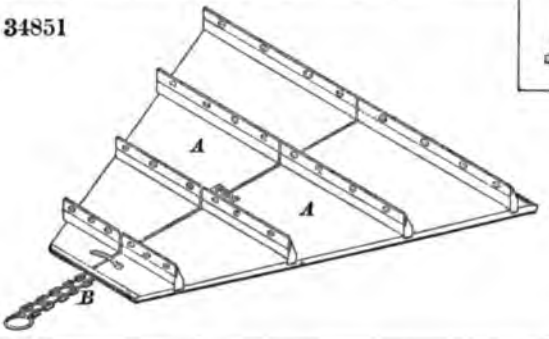

34854

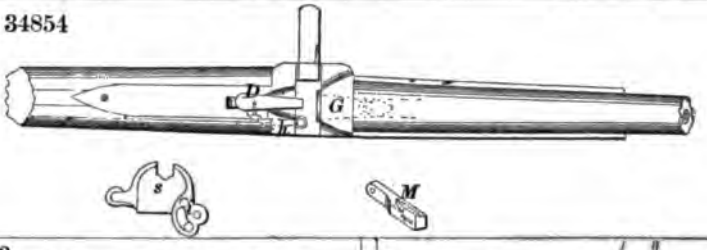

34853

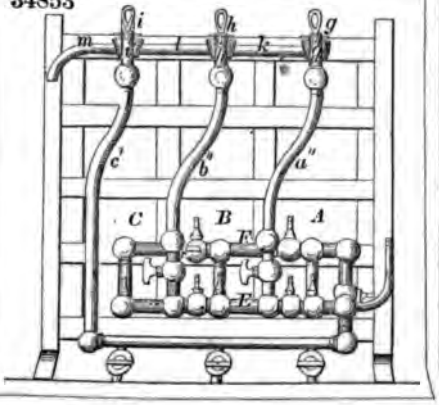

34852

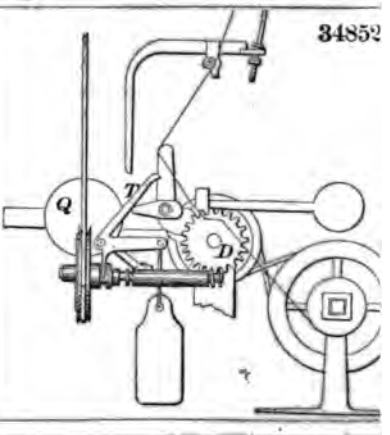

34855

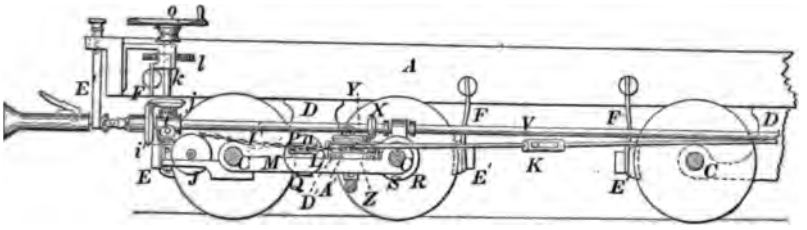

34856

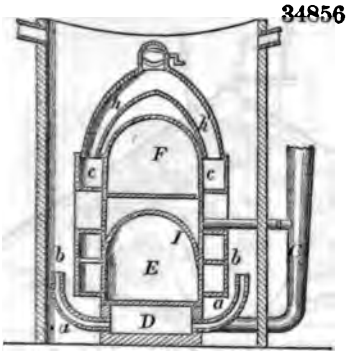

34857

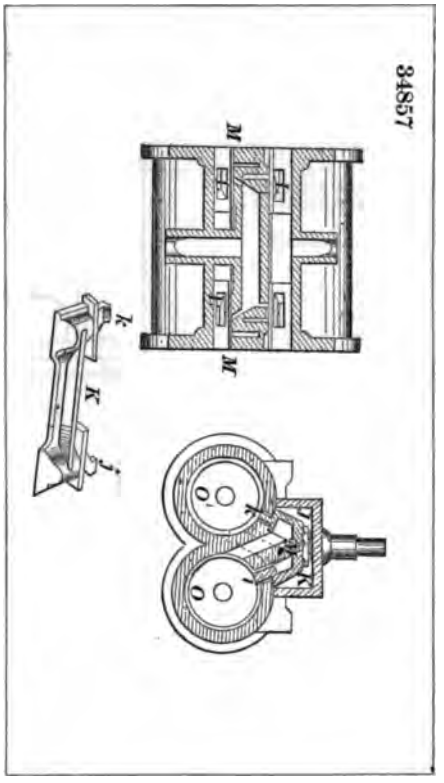

34858

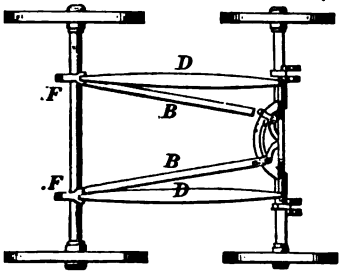

34859

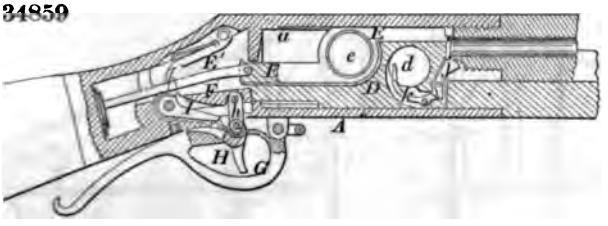

34860

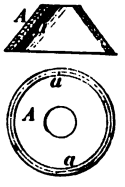

34861

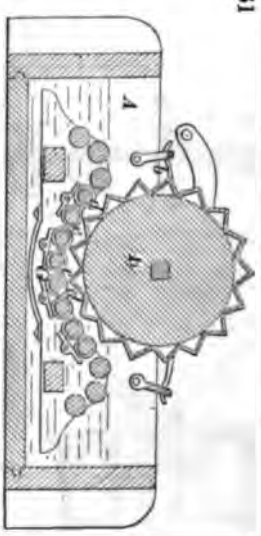

34863

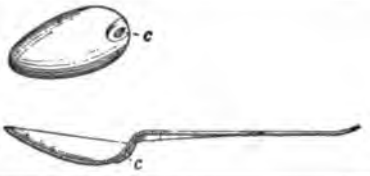

34862

34864

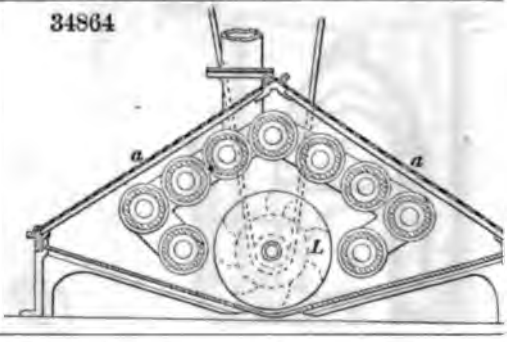

34865

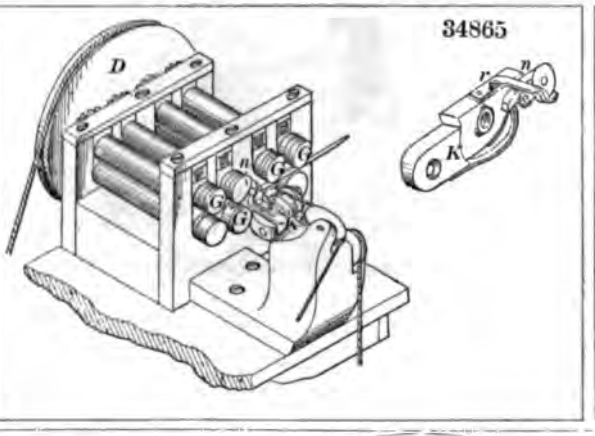

34867

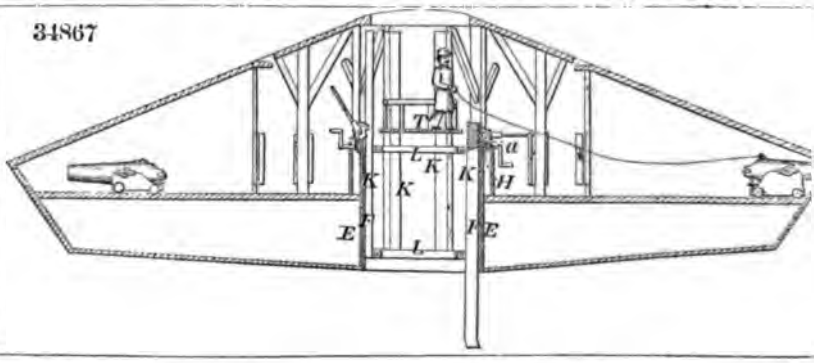

34868

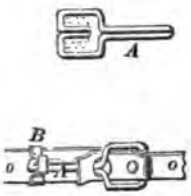

34869

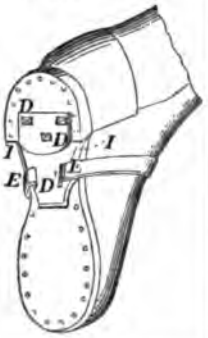

34870

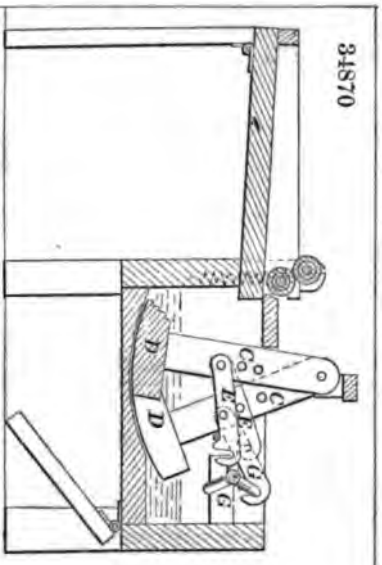

34871

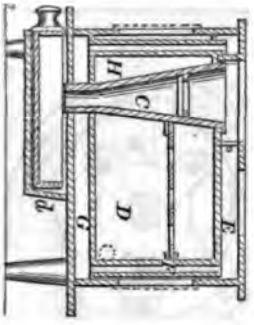

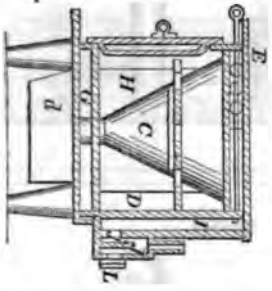

34872

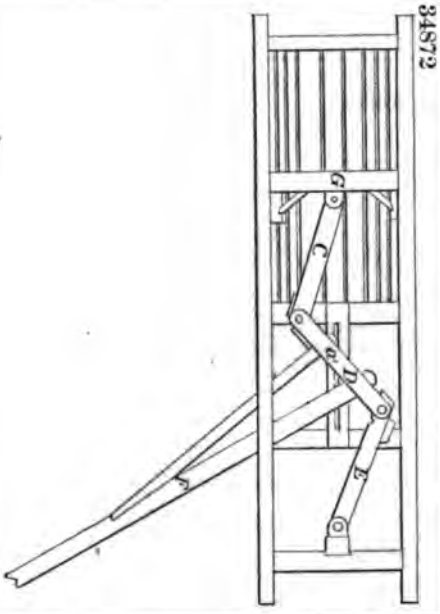

34873

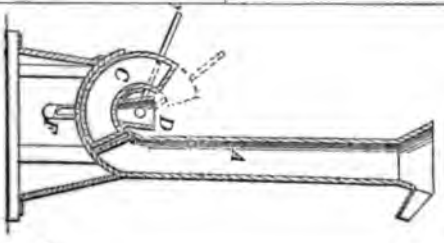

34875

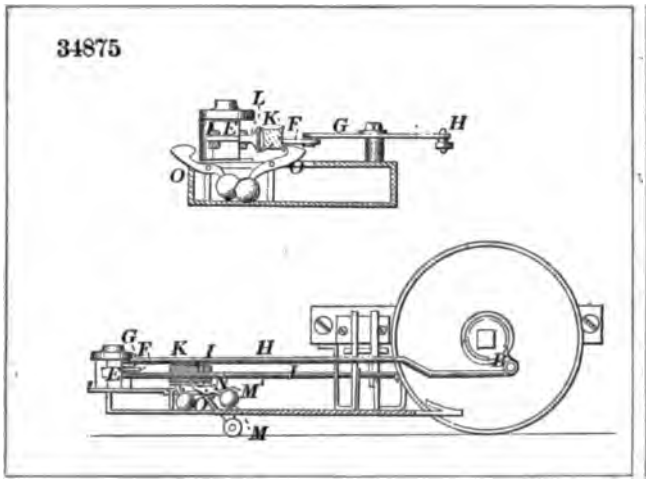

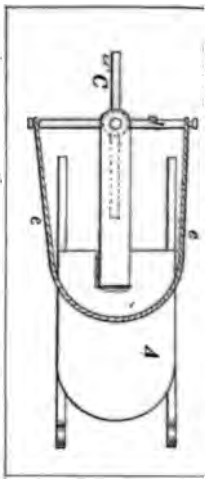

34876

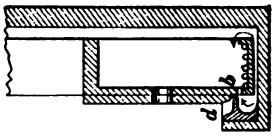

34878

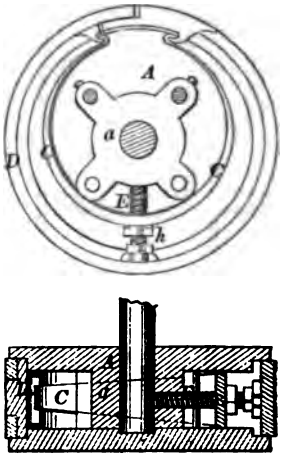

34877

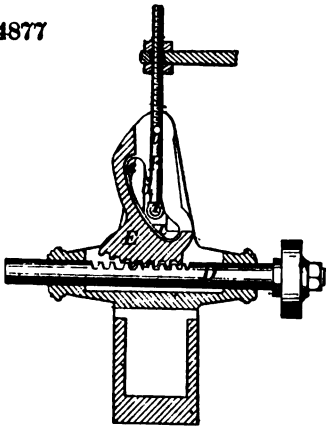

34879

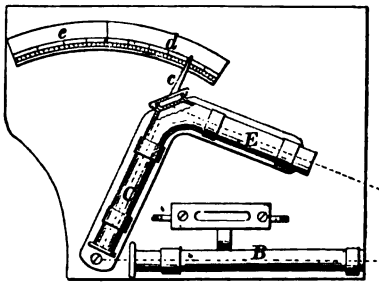

34880

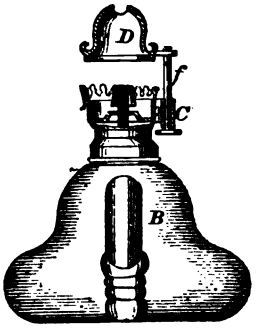

34881

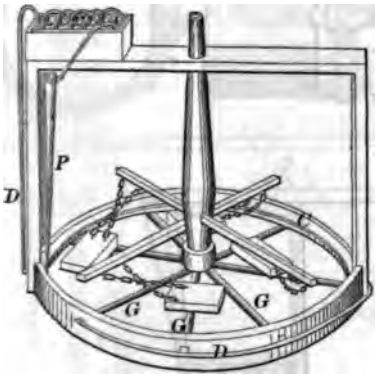

34882

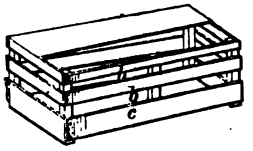

34883

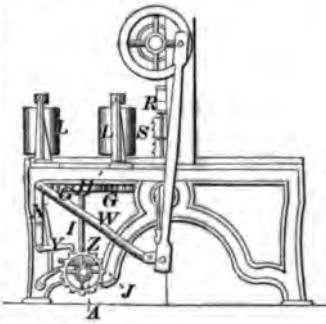

34884

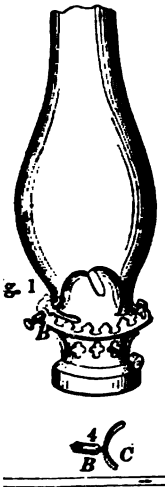

34885

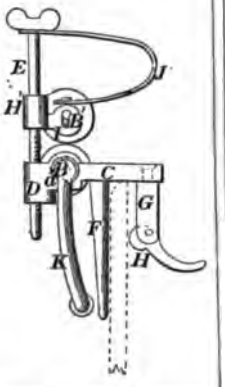

34887

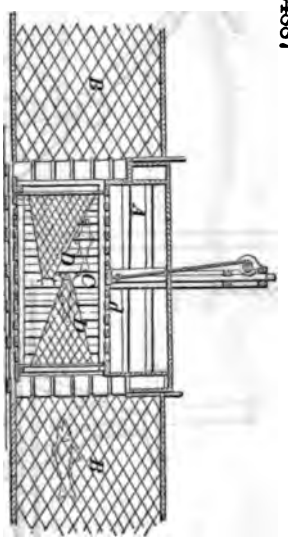

34886

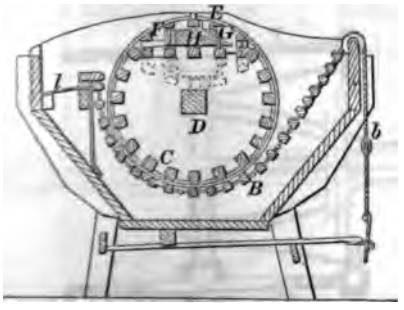

34890

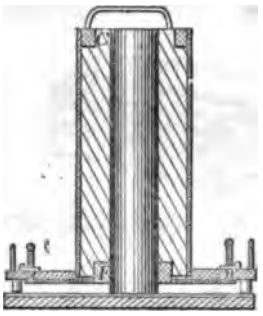

3488

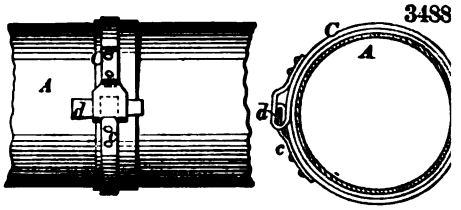

34891

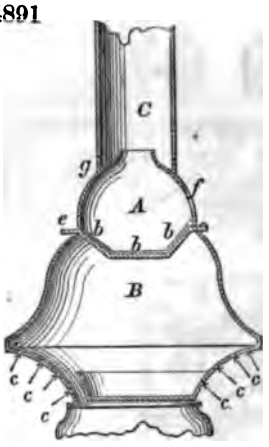

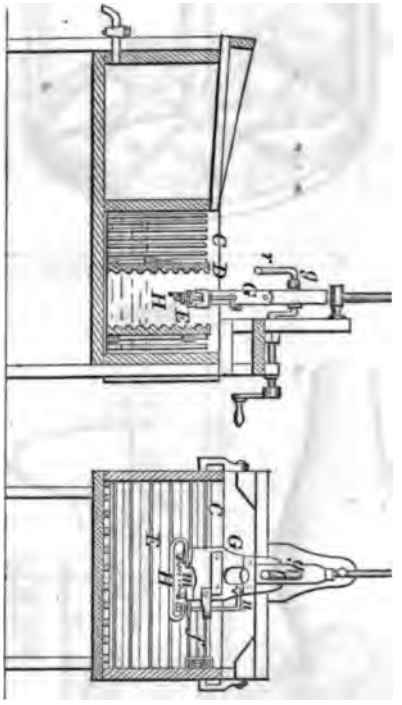

34893

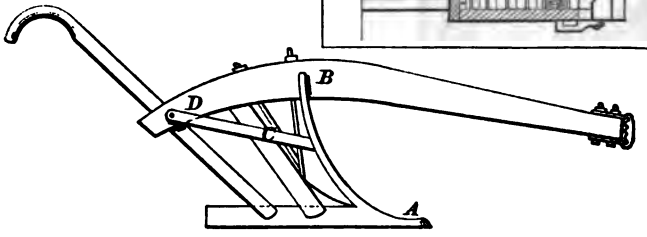

34892

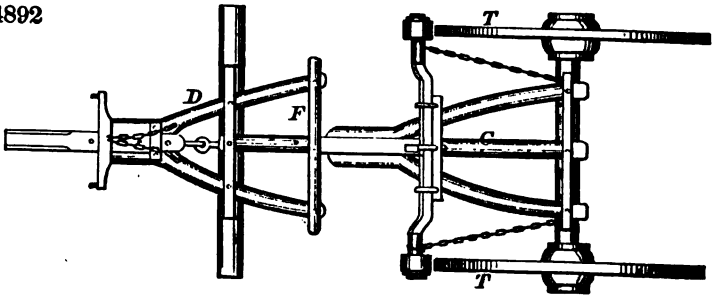

4894

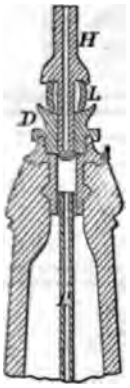

34895

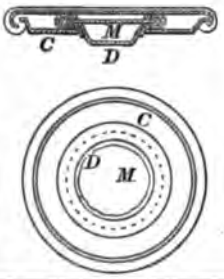

34896

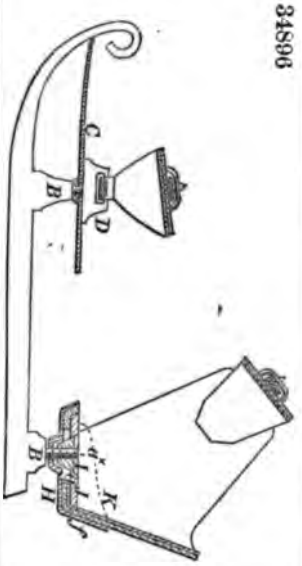

34897

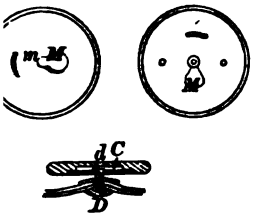

34899

34900

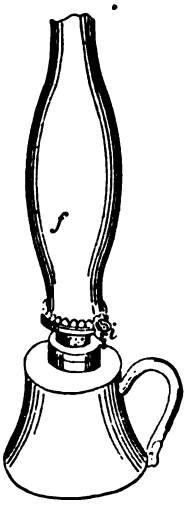

34898

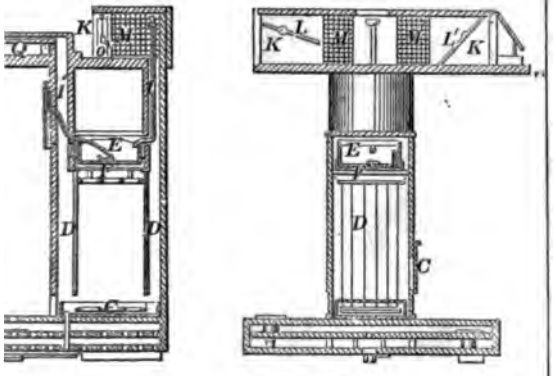

34901

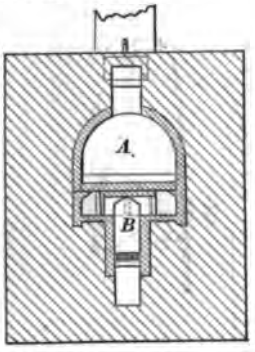

34902

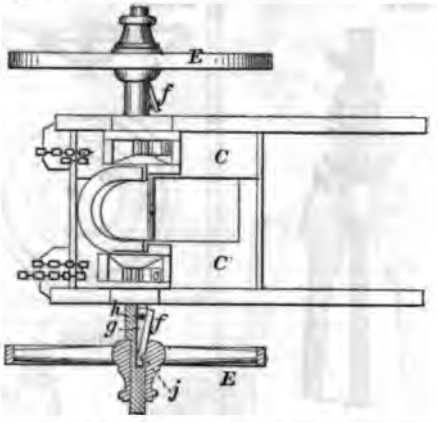

34903

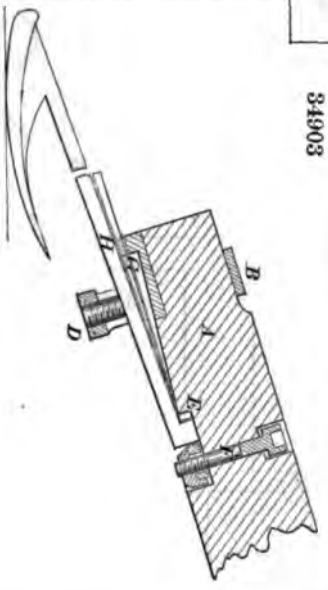

34904

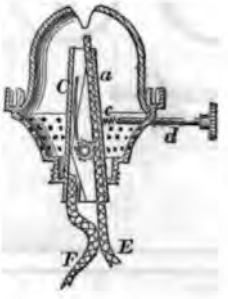

34906

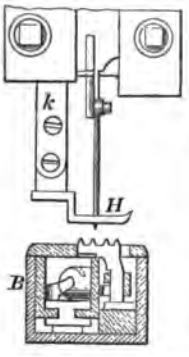

34907

34908

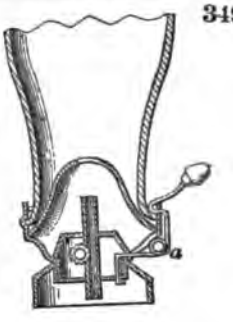

34909

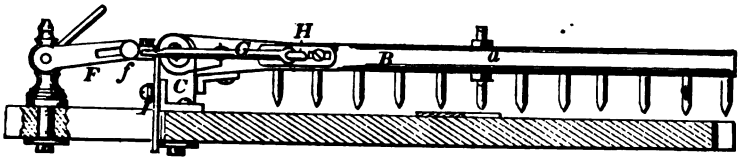

34910

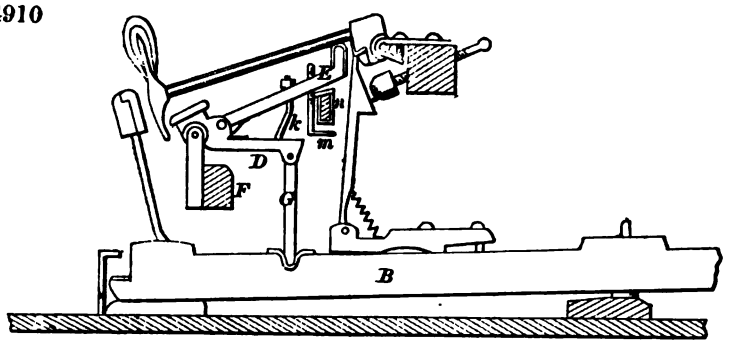

34911

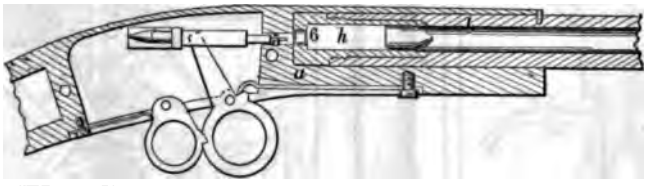

34913

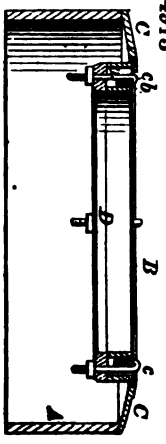

34912

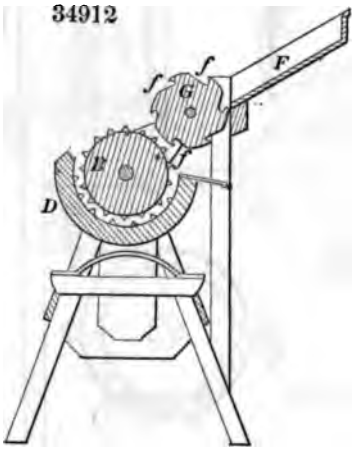

34915

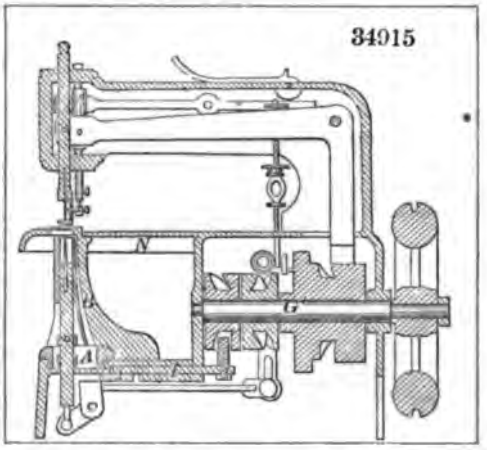

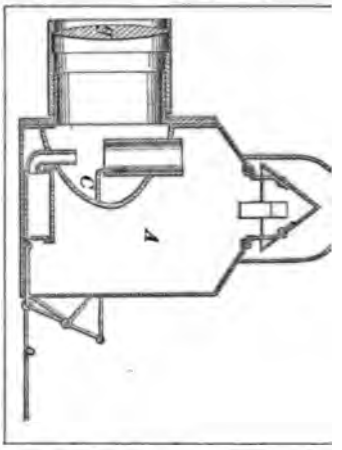

34916

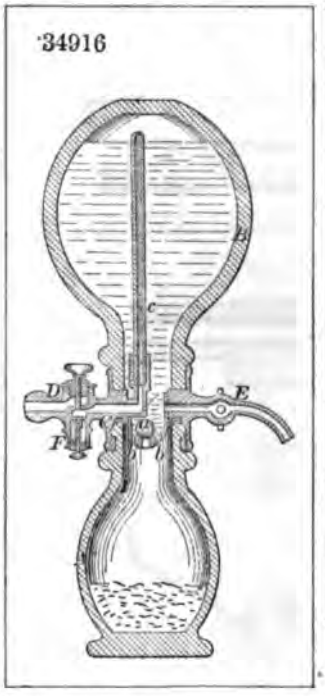

34917

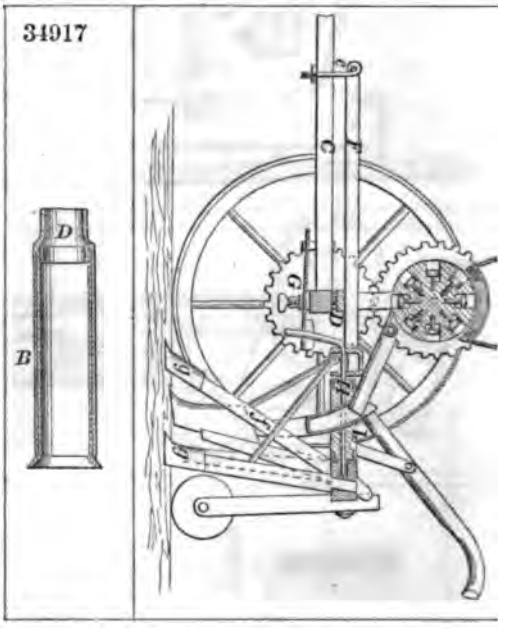

34919

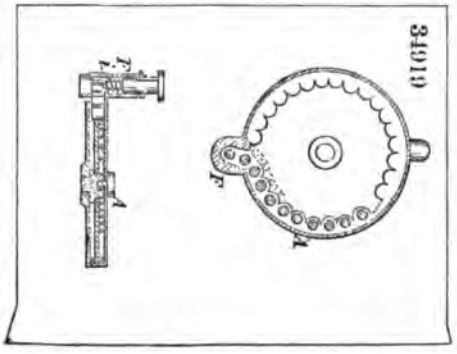

34920

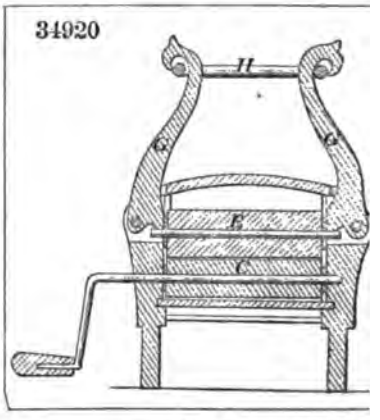

34922

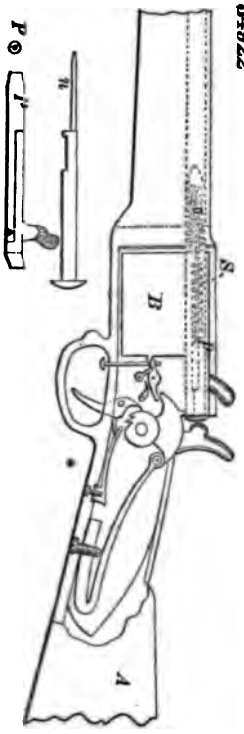

34921

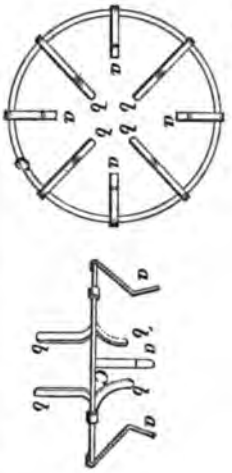

34923

34924

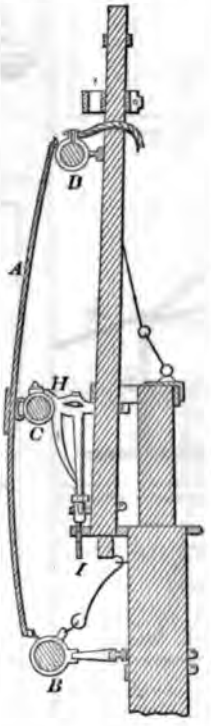

34925

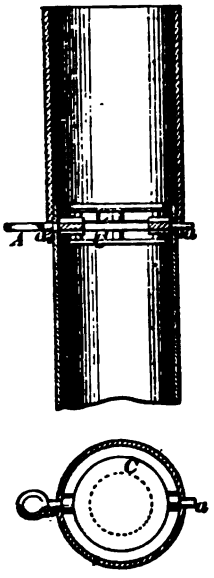

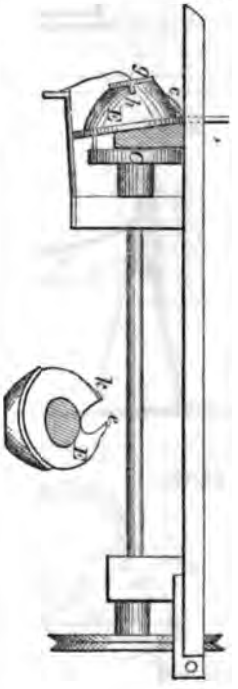

34927

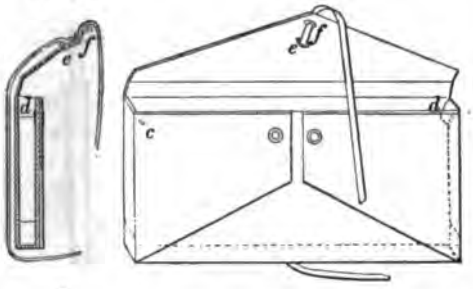

34929

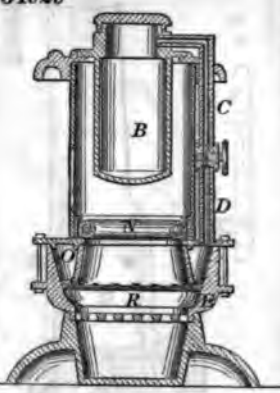

34930

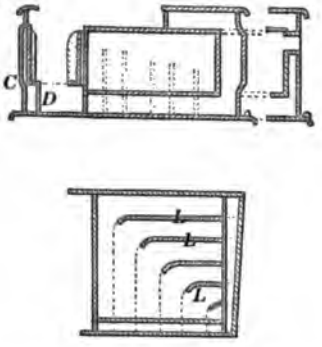

34932

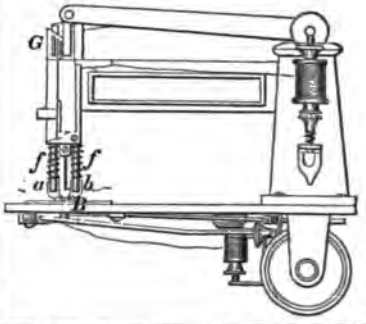

34931

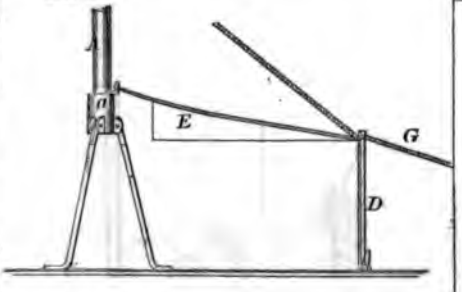

34933

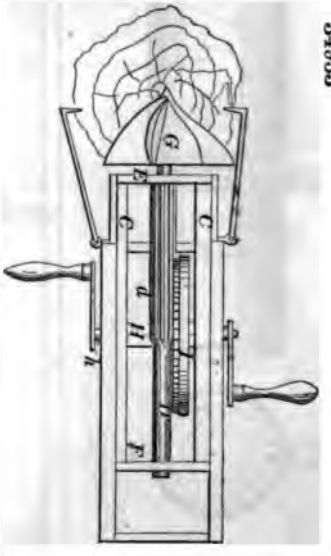

34999

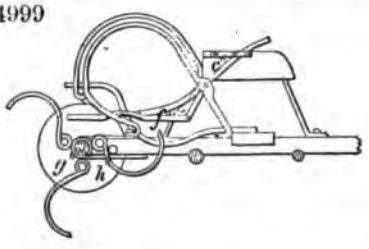

34934

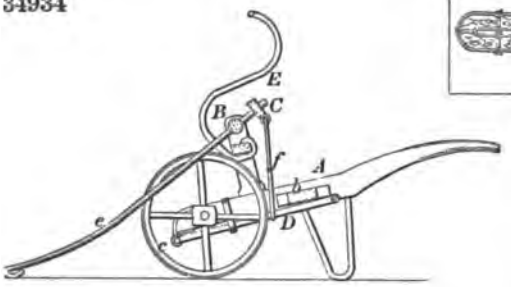

34935

34936

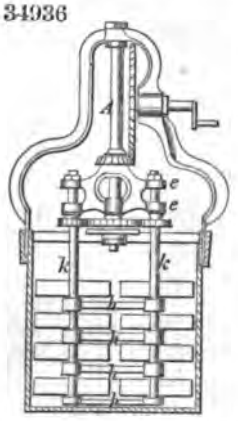

34938

34939

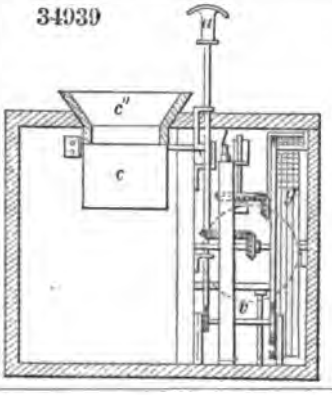

1940

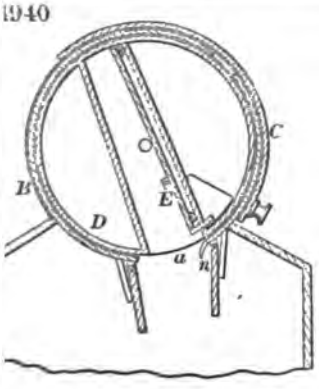

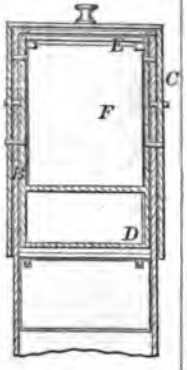

34941

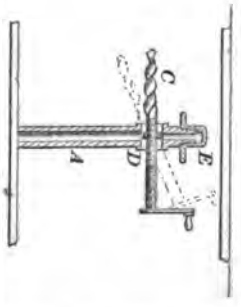

34942

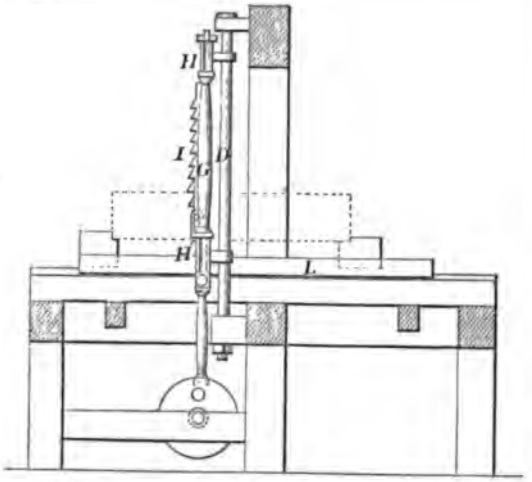

34943

34944

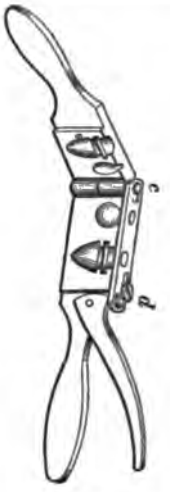

34945

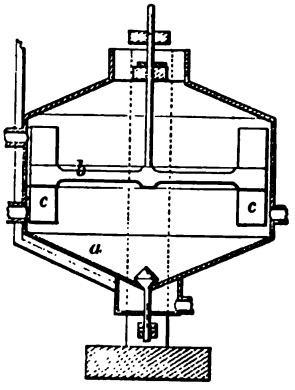

34946

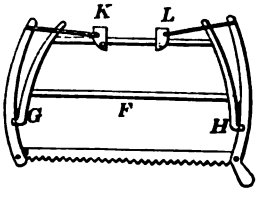

34948

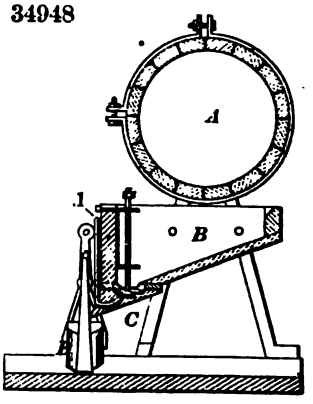

34949

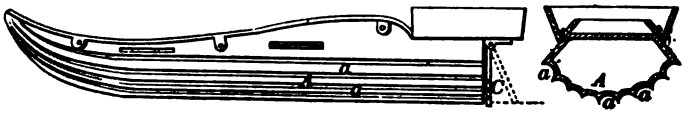

34930

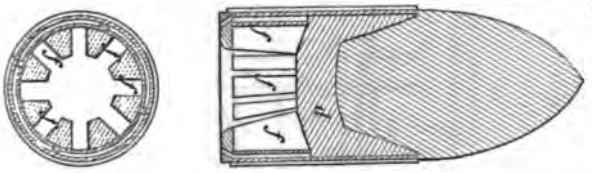

34951

34952

34954

34953

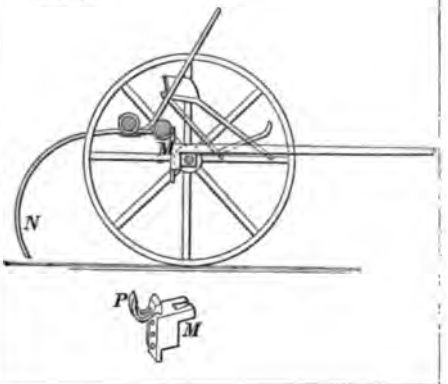

34955

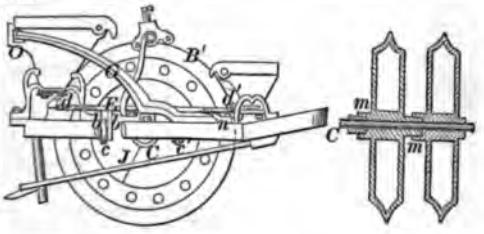

34958

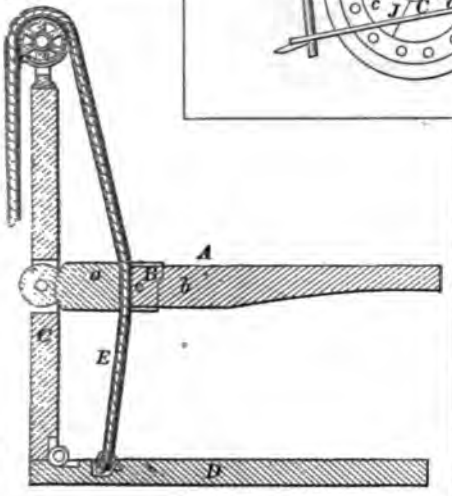

34957

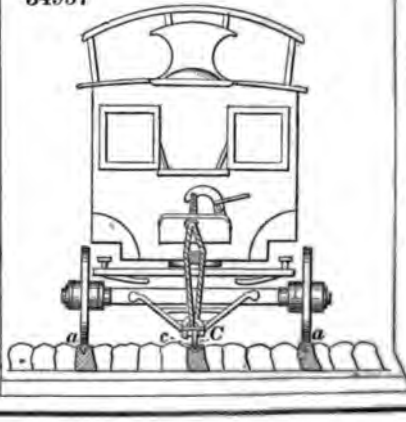

34959

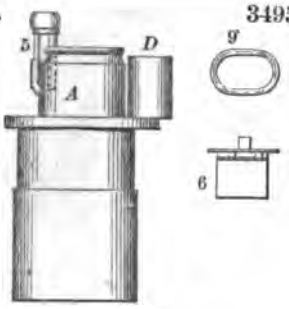

34960

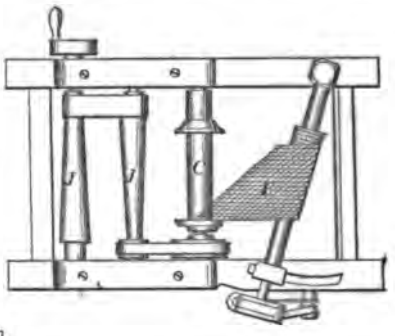

34962

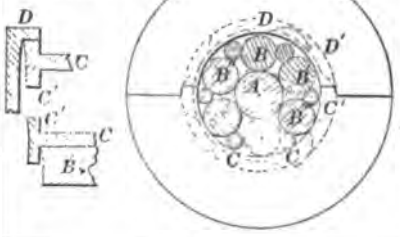

34963

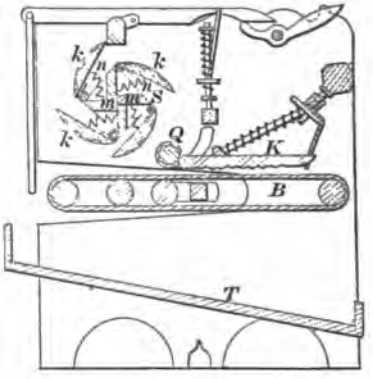

34965

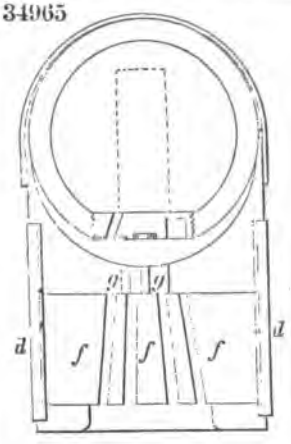

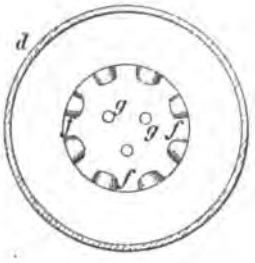

34964

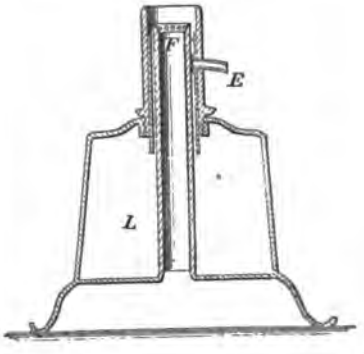

966

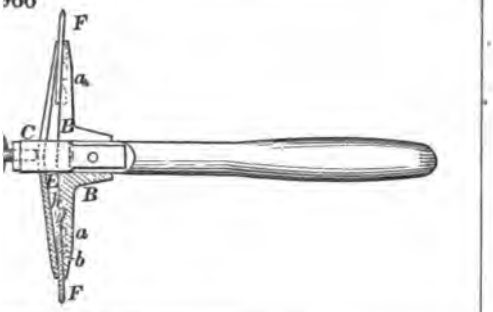

34967

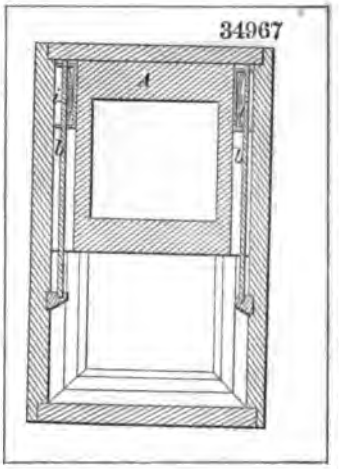

34968

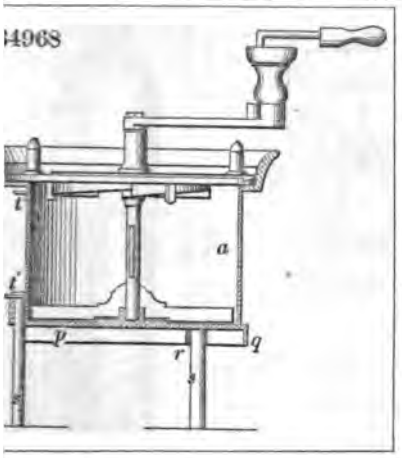

34969

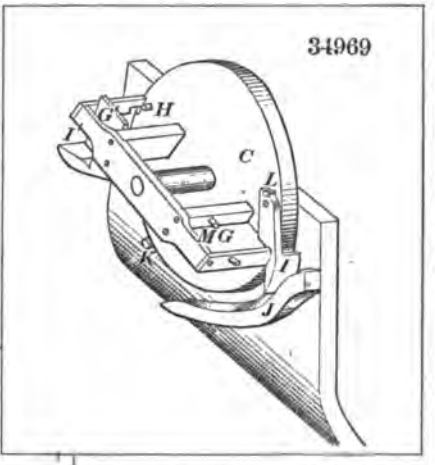

34971

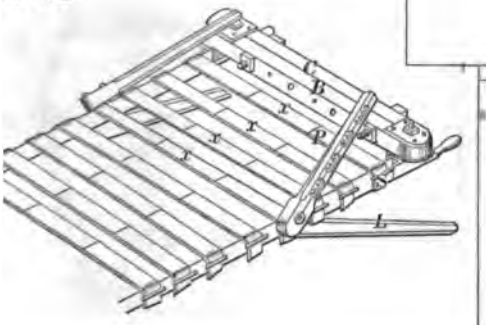

34972

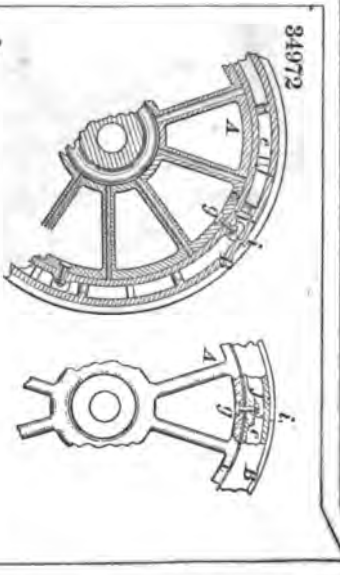

34970

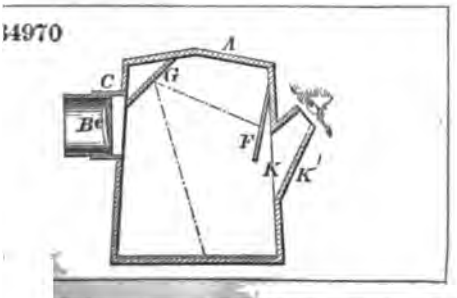

34973

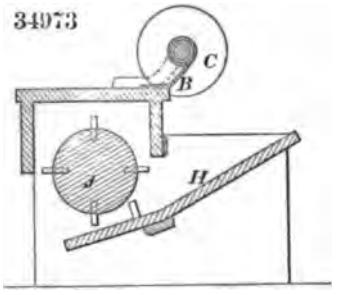

34974

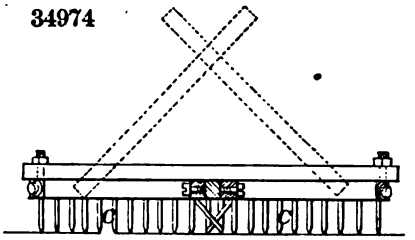

34975

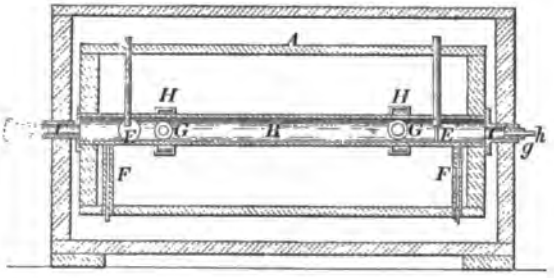

34977

34976

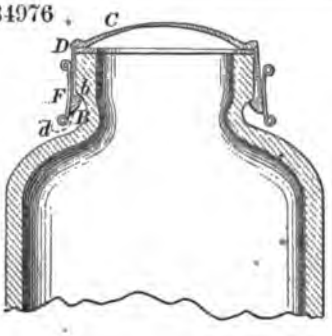

34978

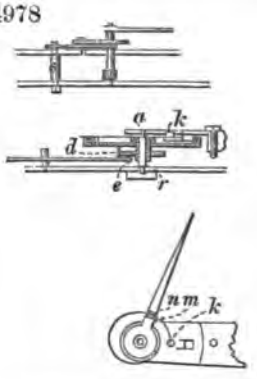

34980

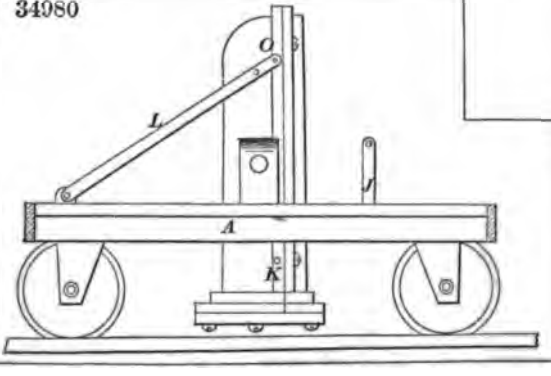

34979

34981

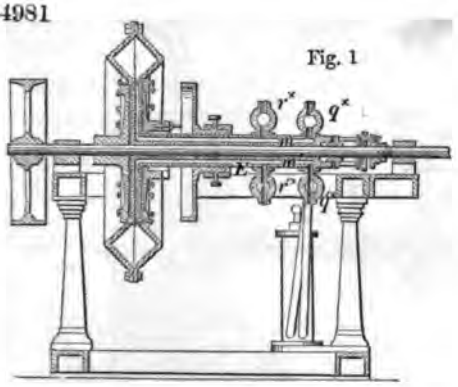

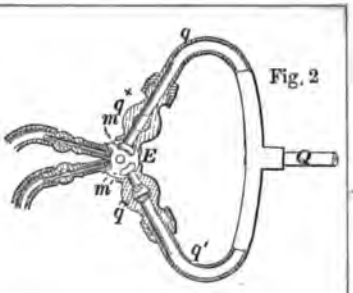

34982

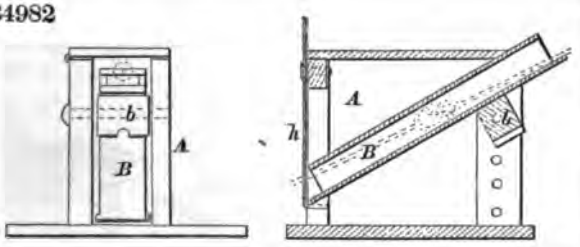

34983

34984

34986

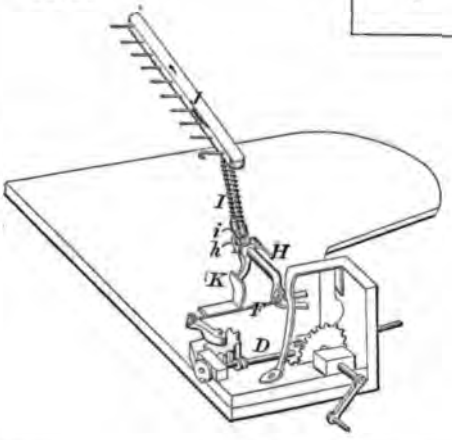

34985

34987

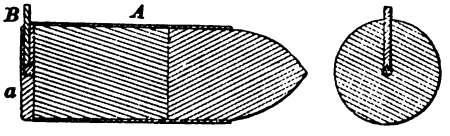

34988

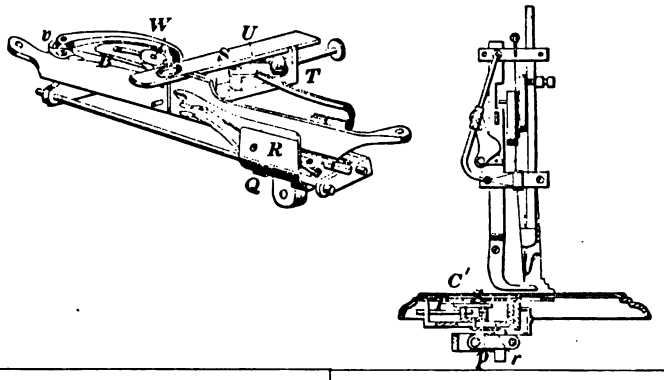

34991

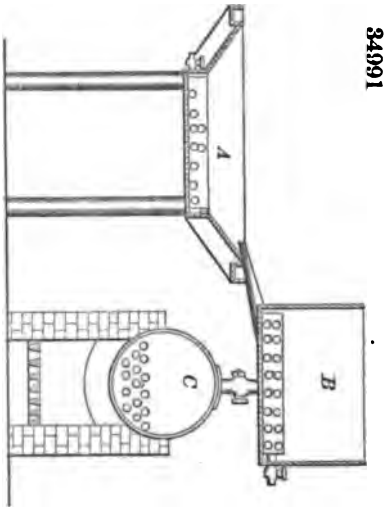

34990

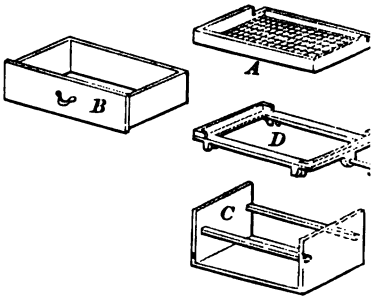

34992

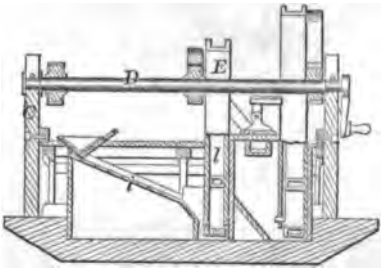

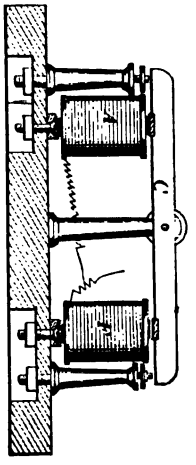

34993

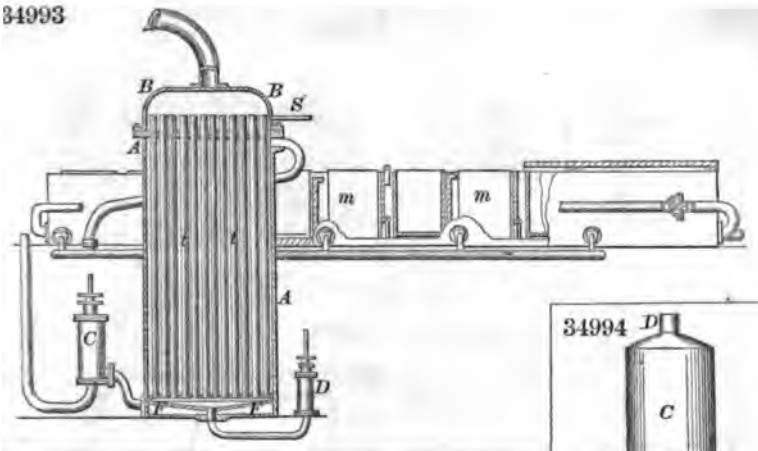

34994

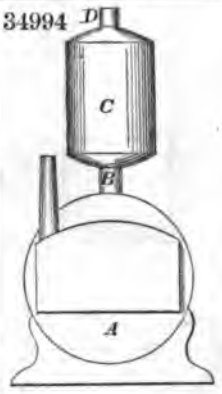

34995

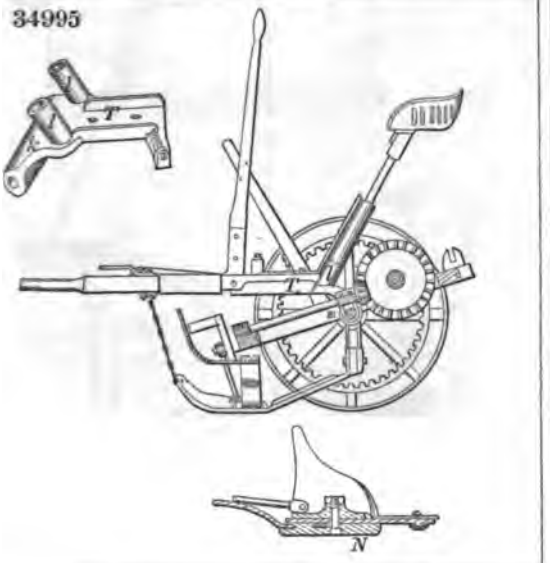

34997

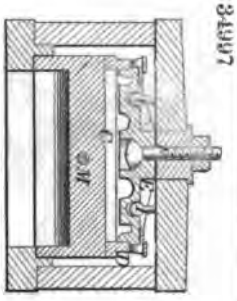

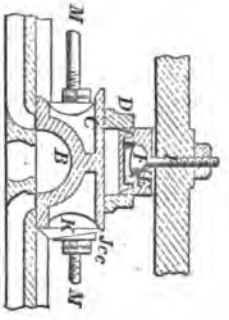

96

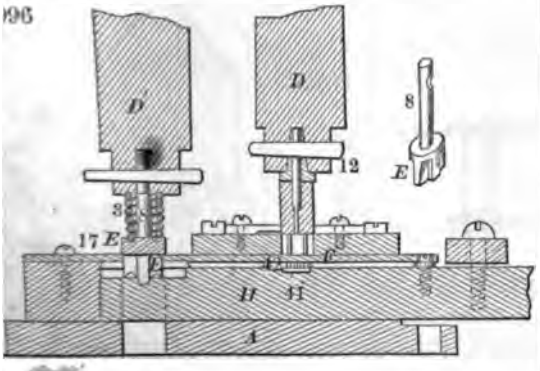

34998

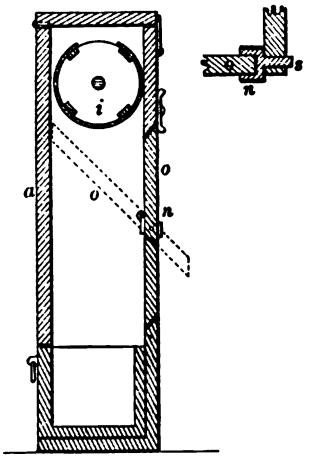

35001

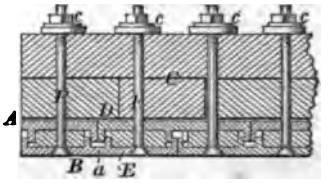

35000

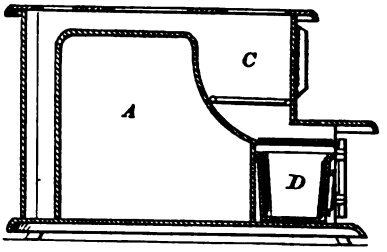

35002

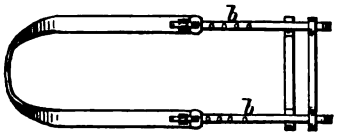

35003

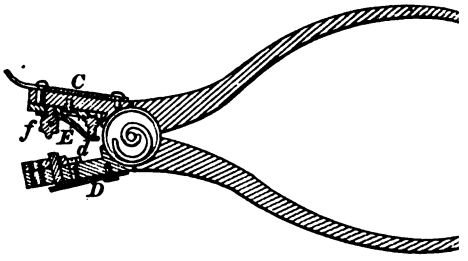

35004

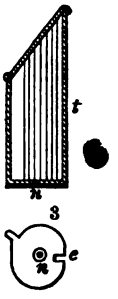

5005

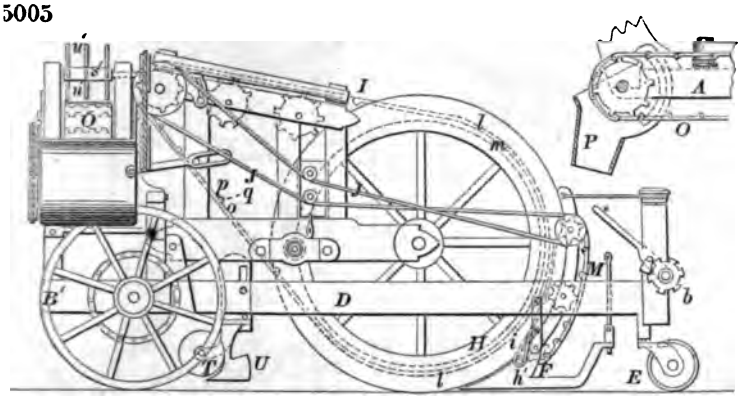

007

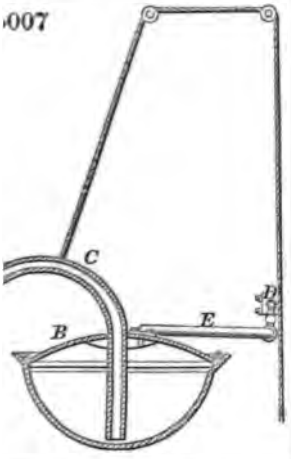

35008

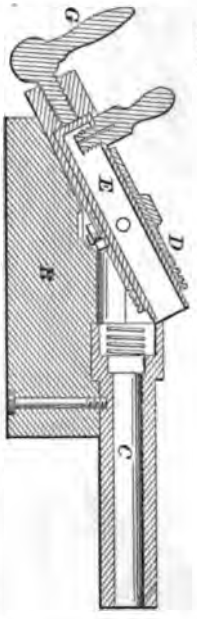

35009

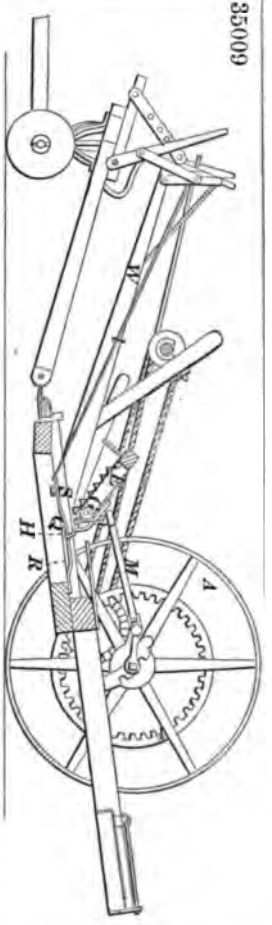

10

35011

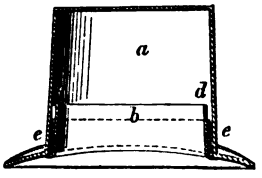

35012

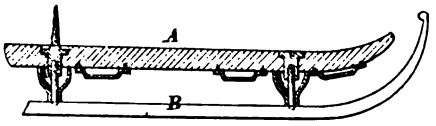

35013

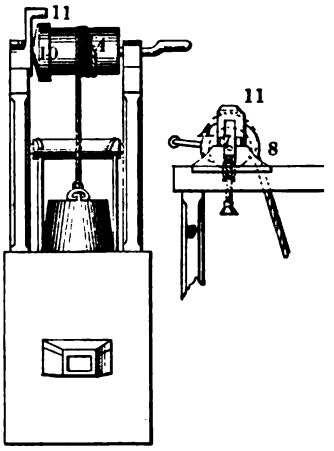

35014

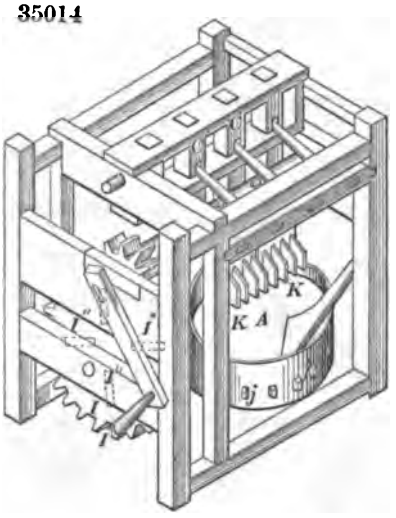

35015

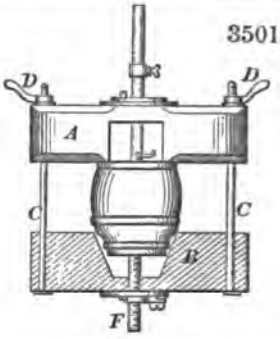

35018

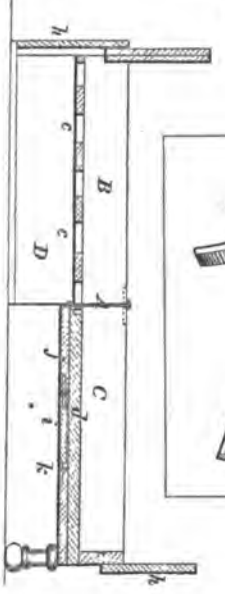

35016

35017

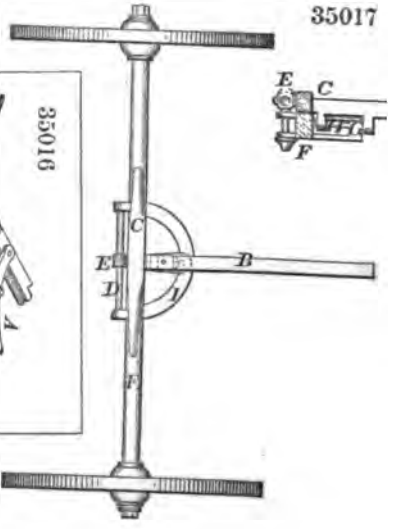

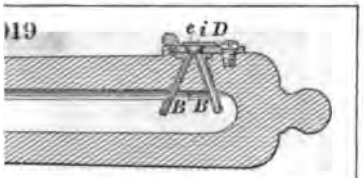
c i D
B B

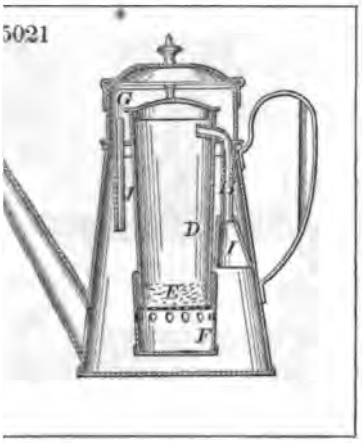
5021
G
D
I
E
F

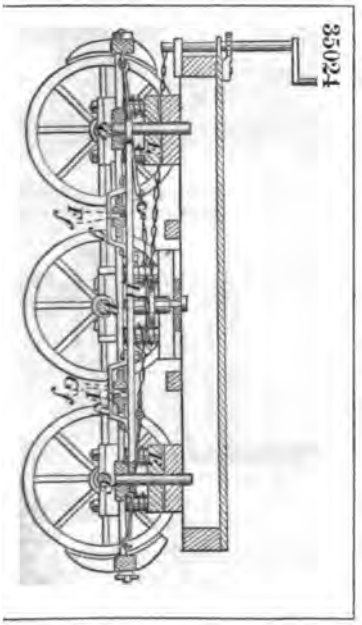
35024

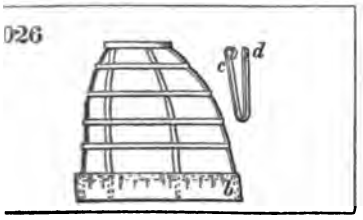
026
c
d

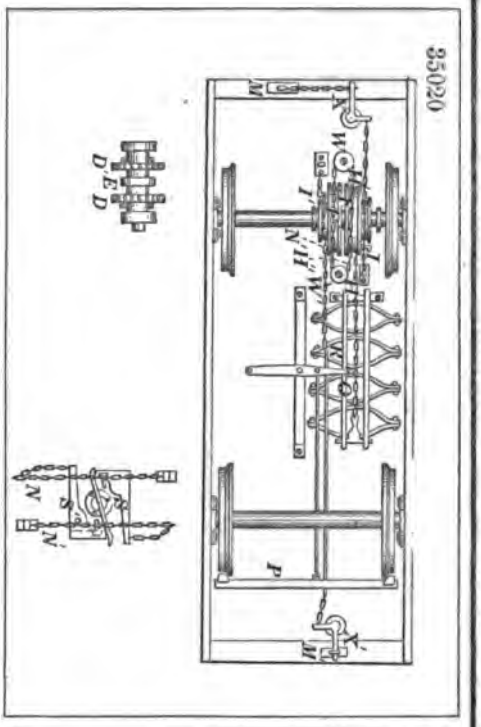
35020
D
E
D
F

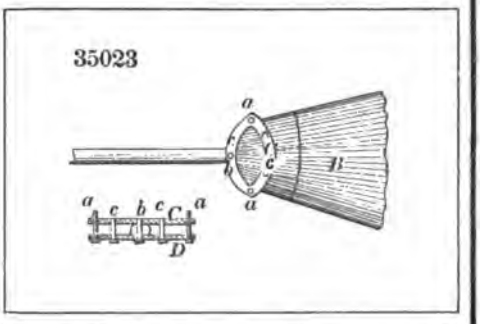
35023
a
B
c
a
a
c
b
c
C
a
D

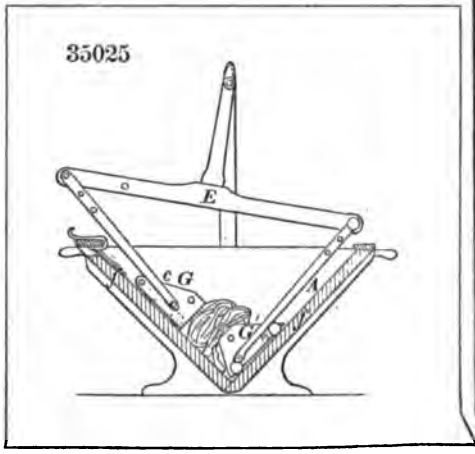
35025
E
c G
A
G

35027

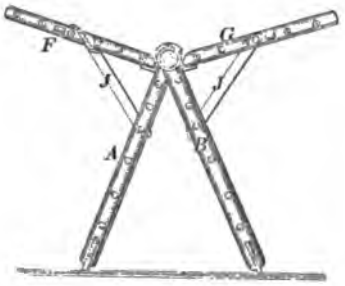

35024

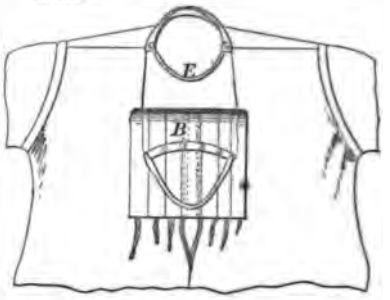

35030

35029

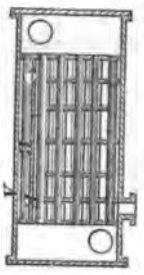

35031

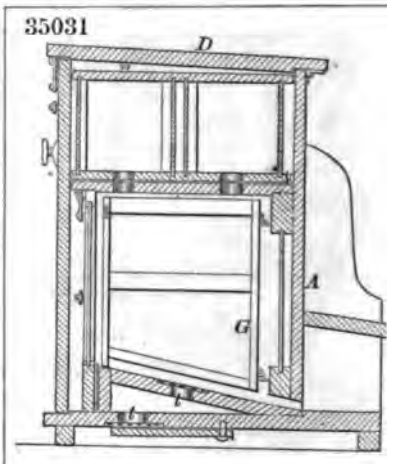

35032

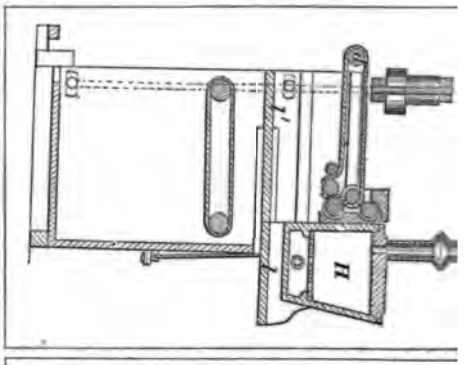

35035

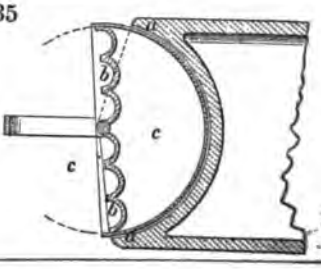

35036

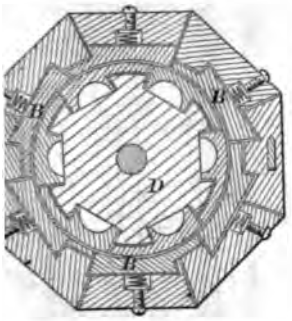

35037

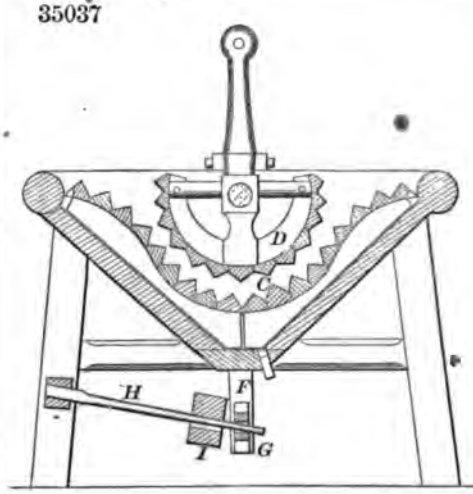

35038

35040

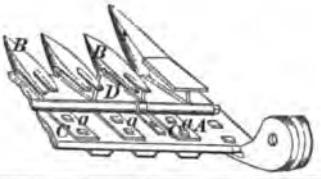

35039

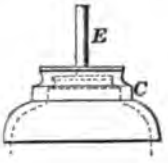

35042

35041

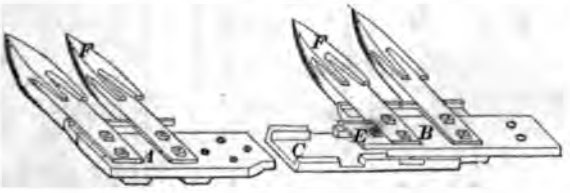

35043

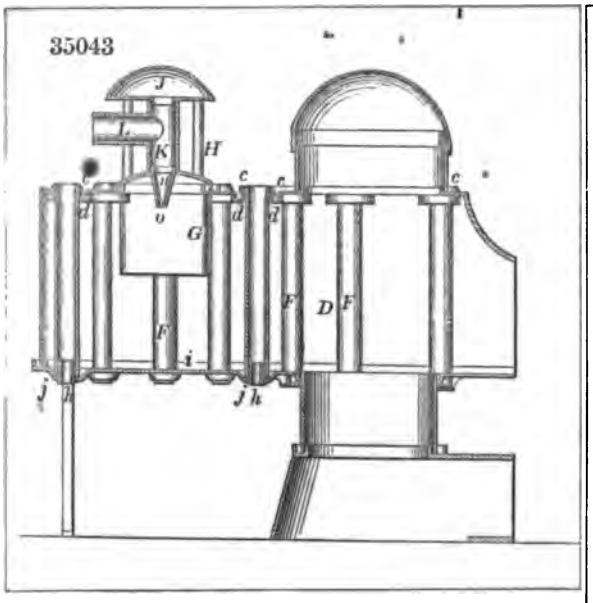

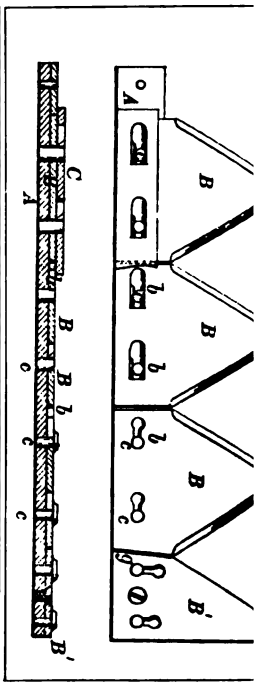

35045

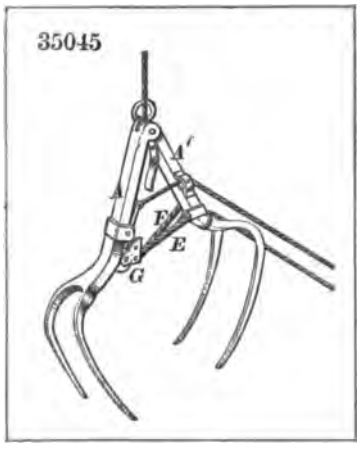

35046

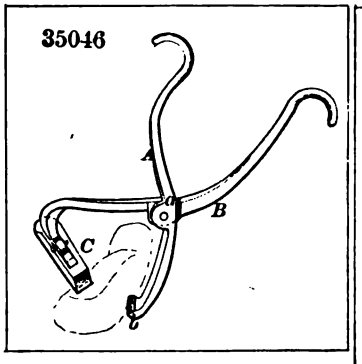

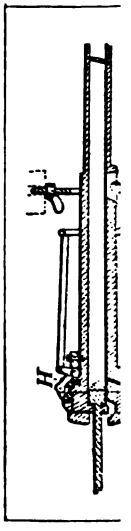

35047

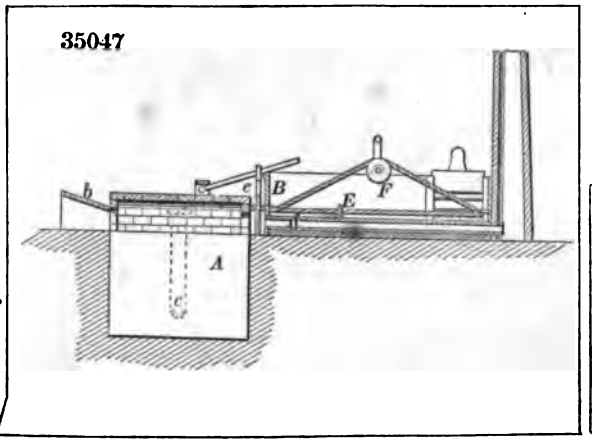

35049

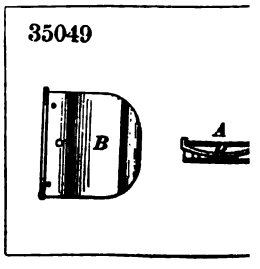

35050

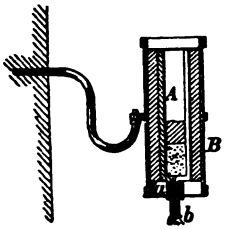

35051

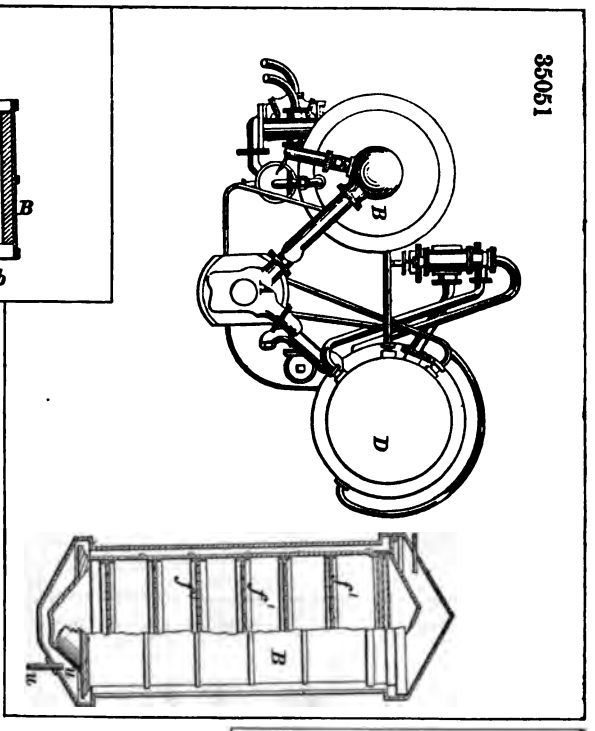

35052

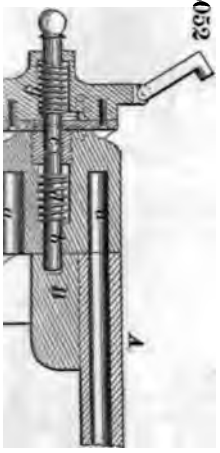

35053

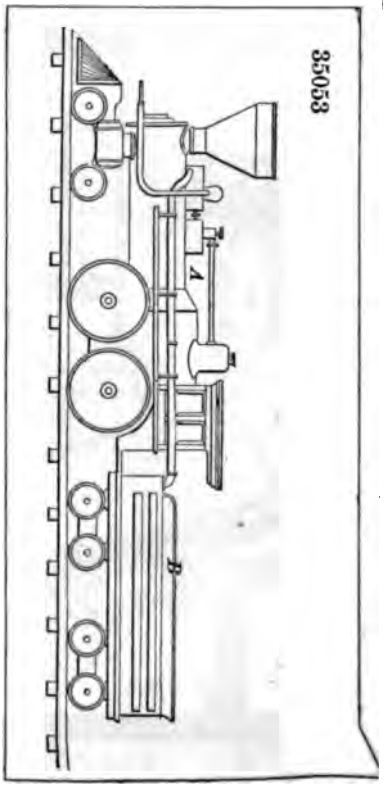

35054

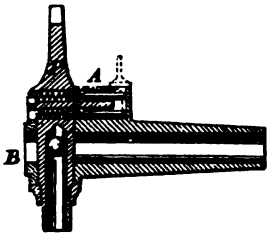

35055

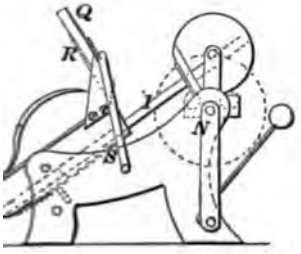

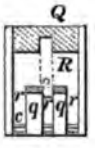

35056

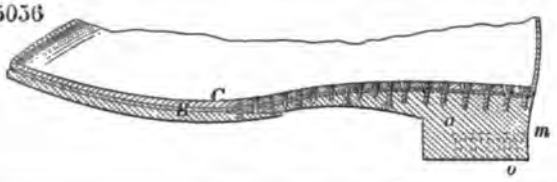

35058

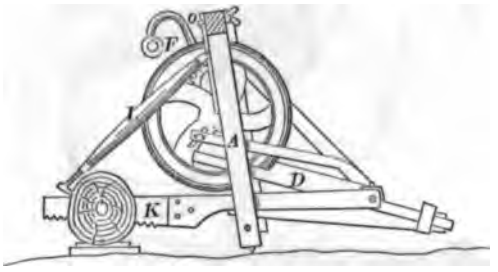

35059

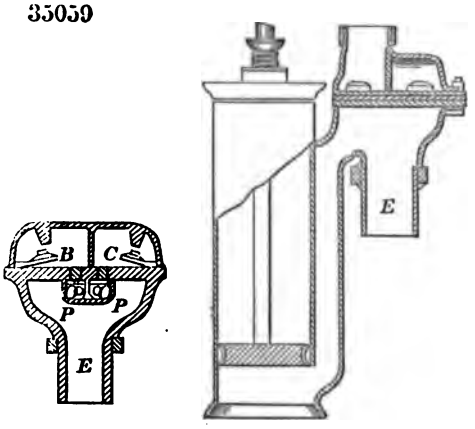

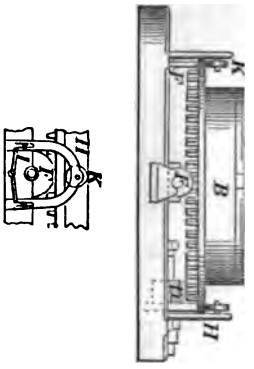

35061

35062

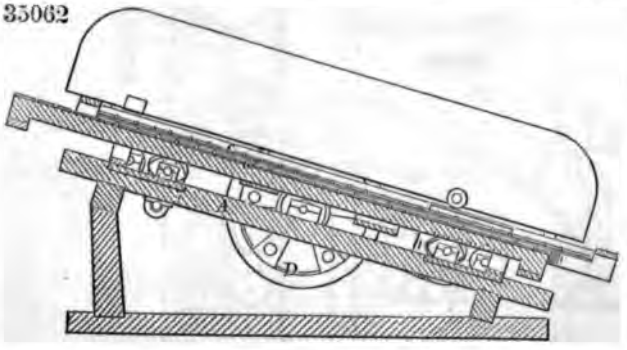

5063

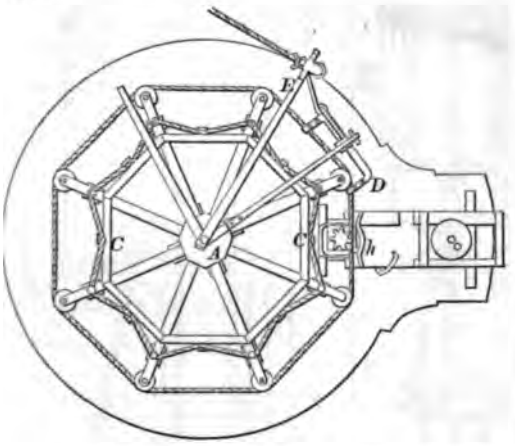

35065

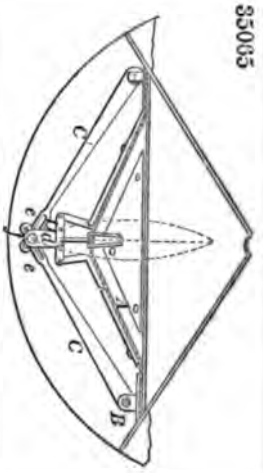

35066

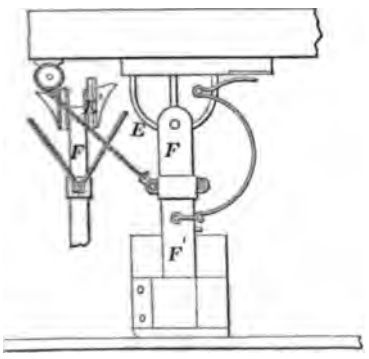

35068

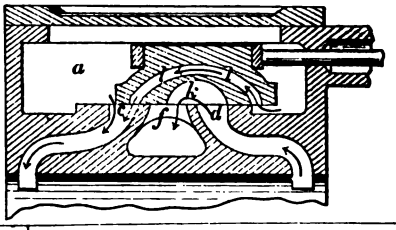

35067

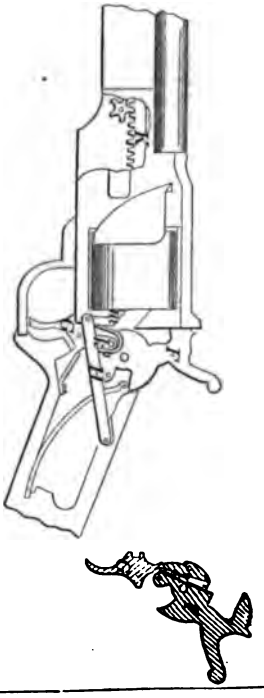

064

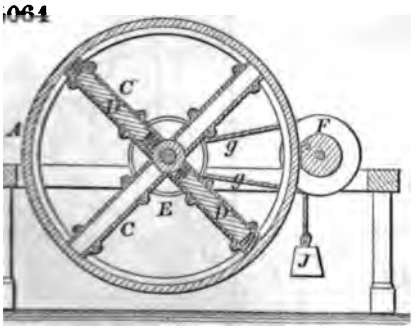

35069

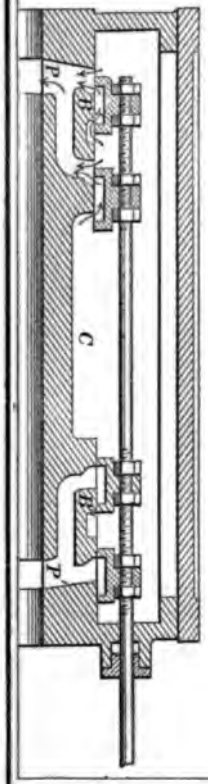

35070

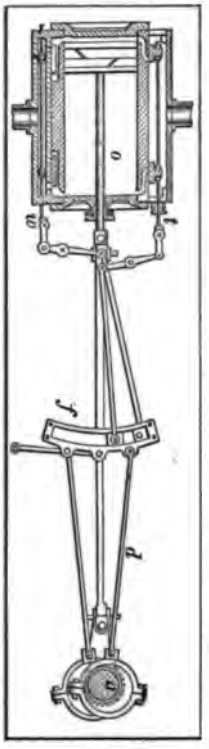

35071

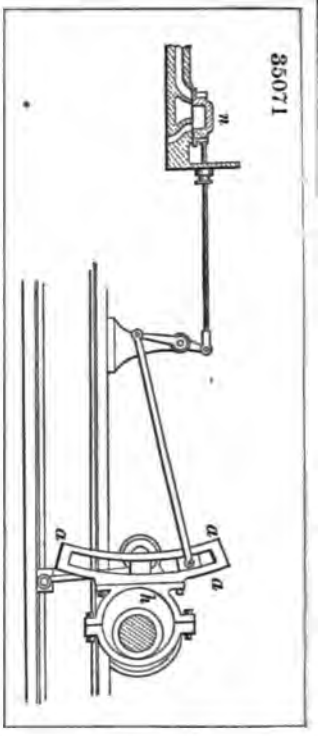

35072

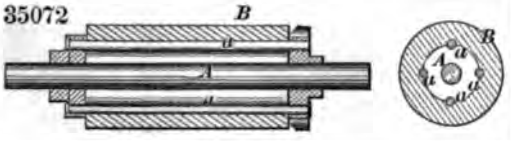

35073

35074

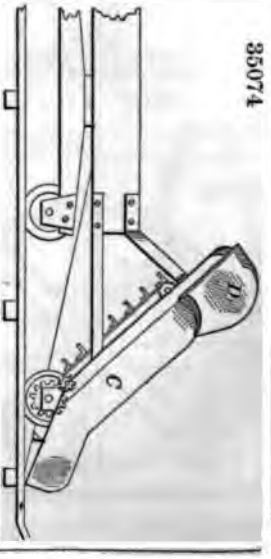

35075

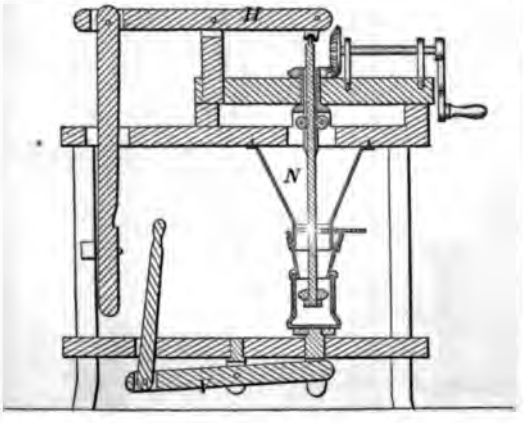

35076

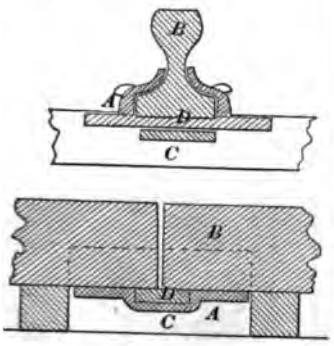

35077

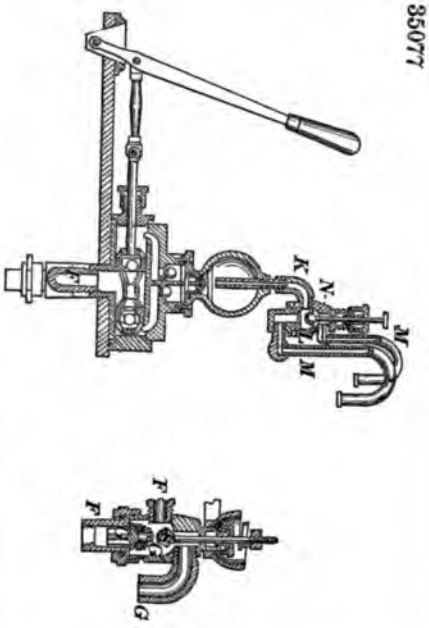

35078

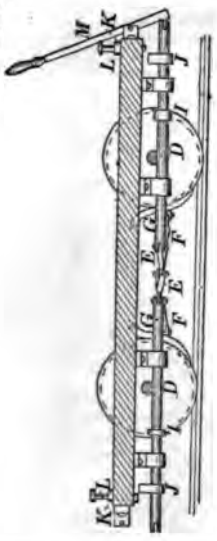

35079

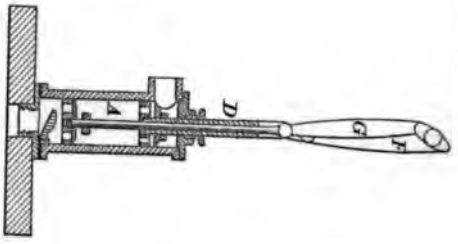

35080

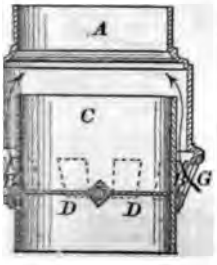

35081

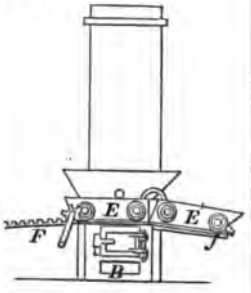

35082

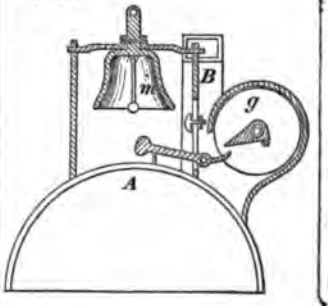

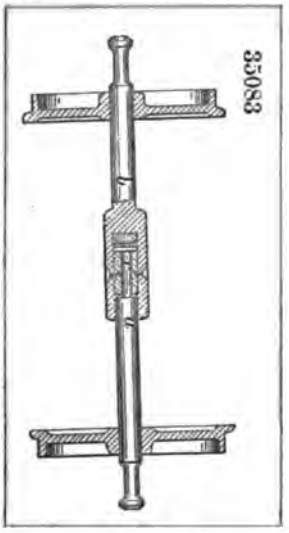

35083

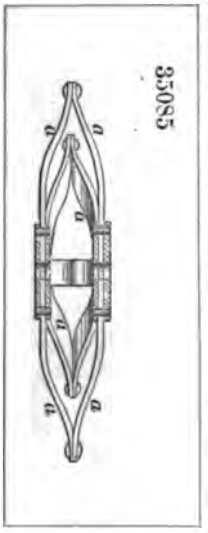

35085

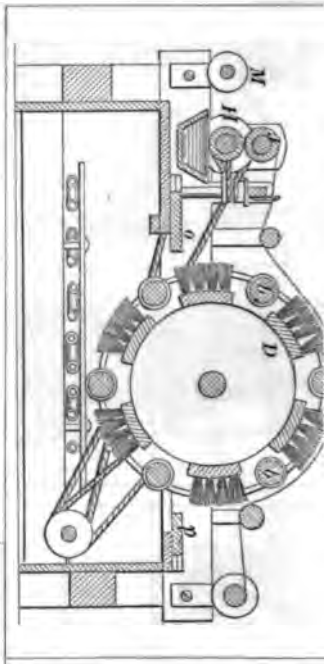

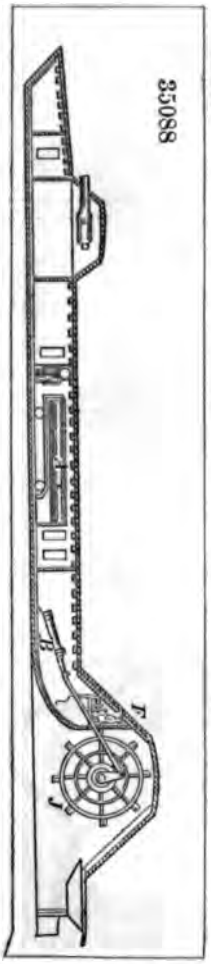

35088

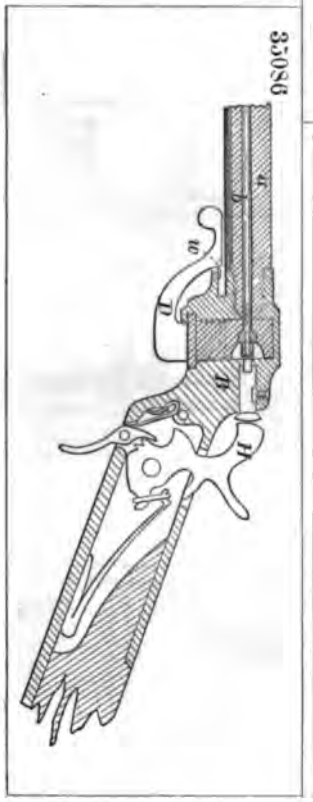

35086

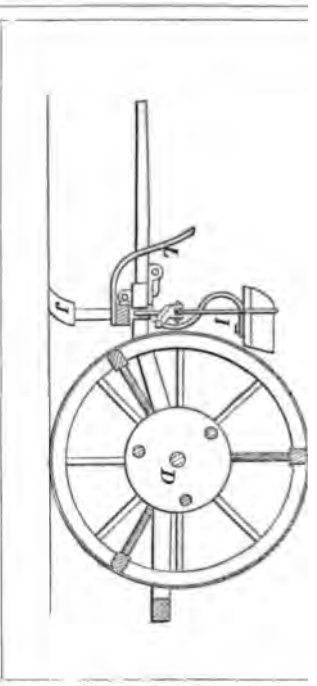

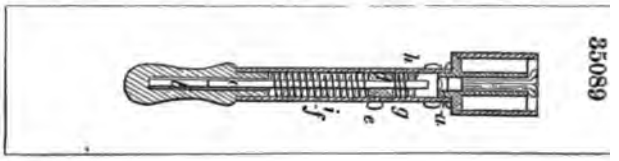

35089

35091

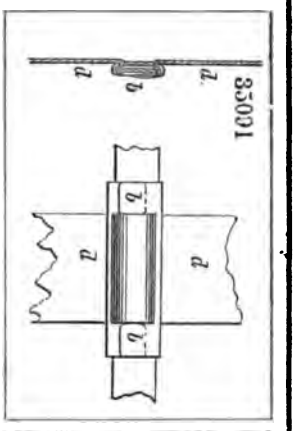

35090

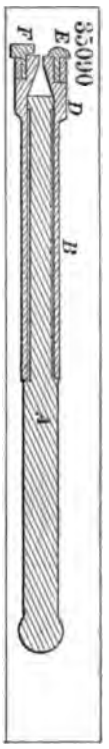

35094

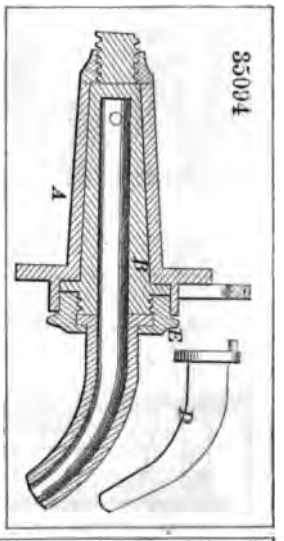

35095

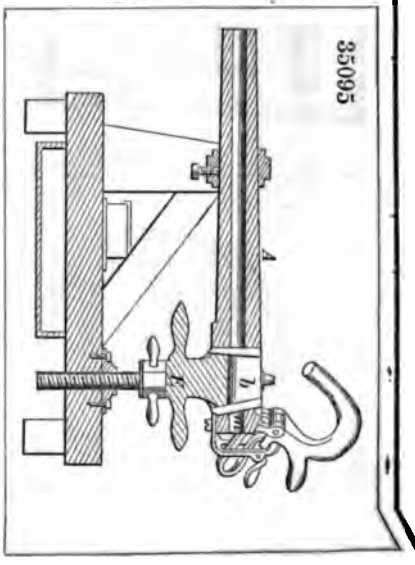

35092

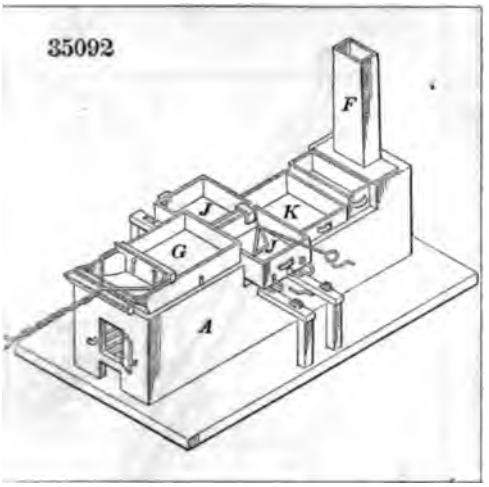

35093

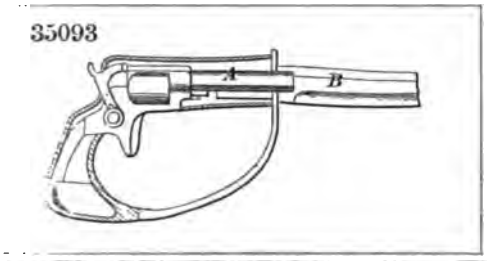

35096

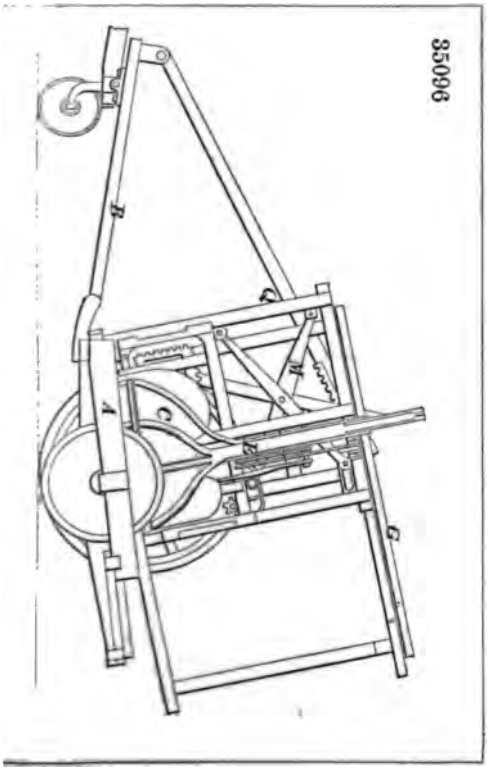

35097

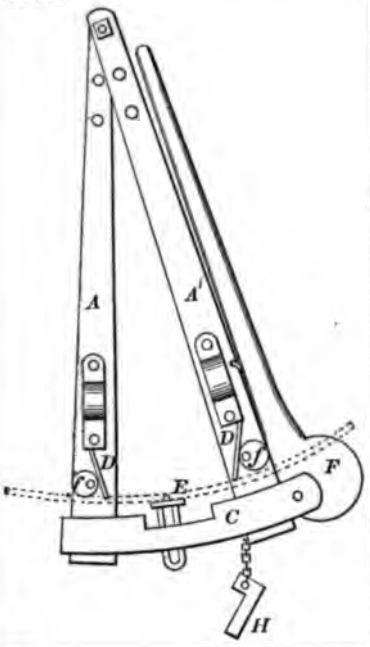

35098

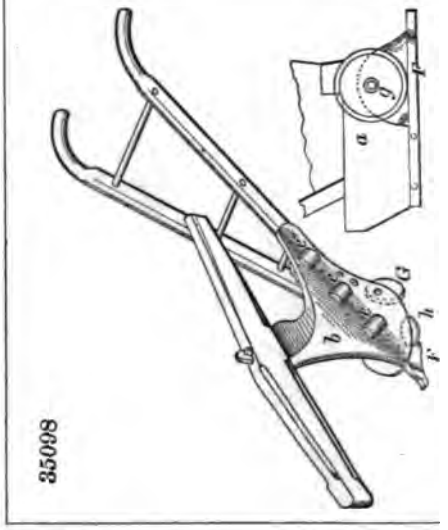

35099

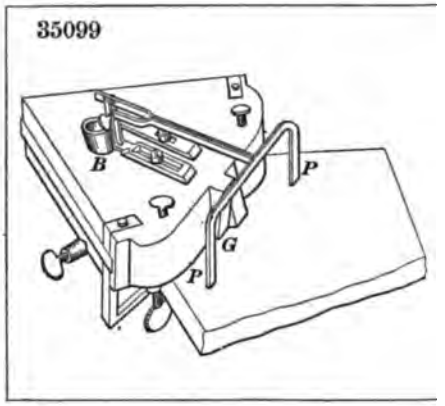

35101

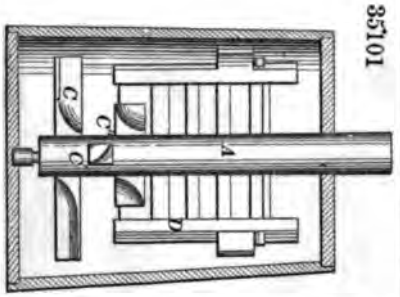

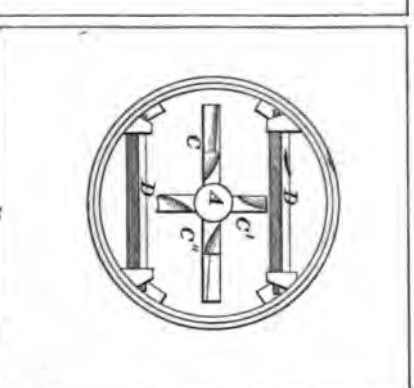

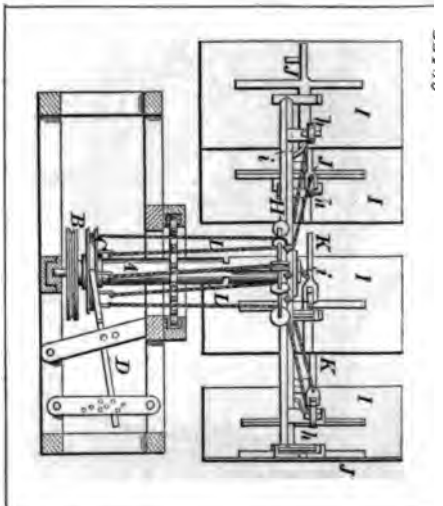

35102

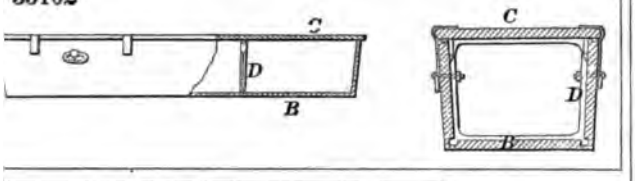

35103

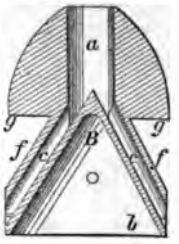

35104

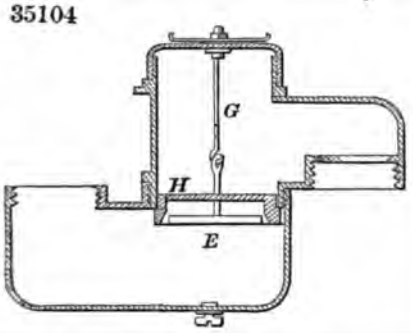

35105

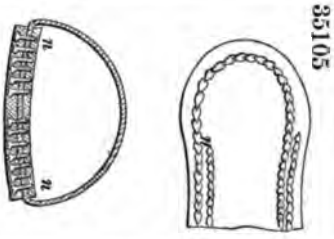

35107

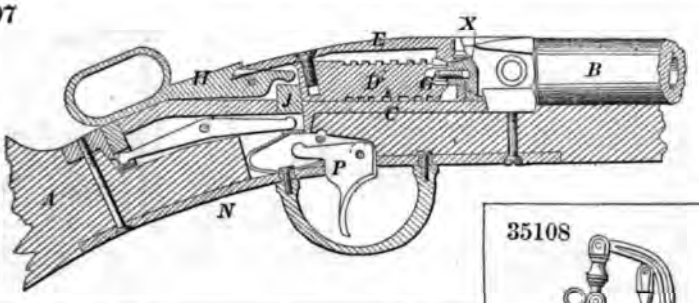

35108

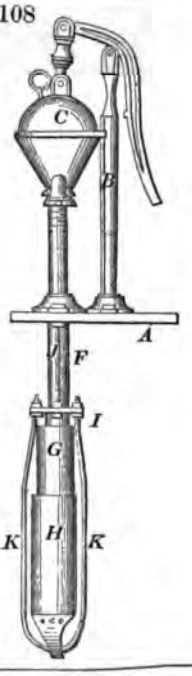

35106

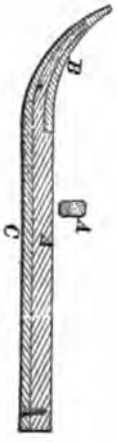

35109

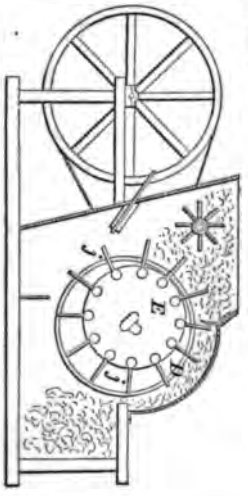

35110

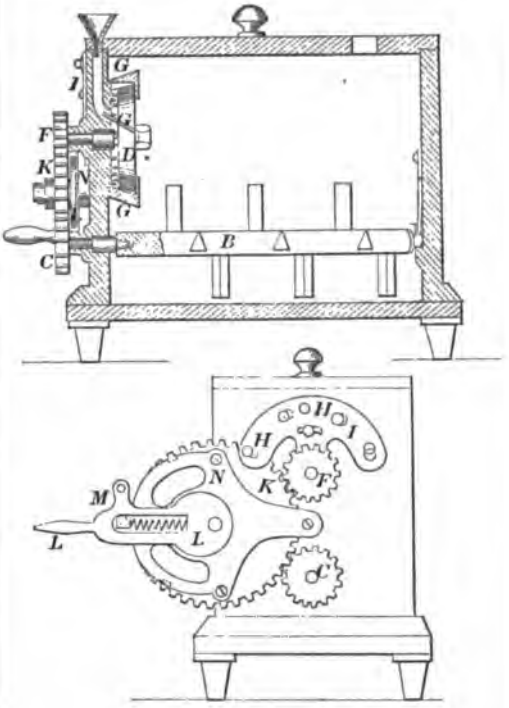

35111

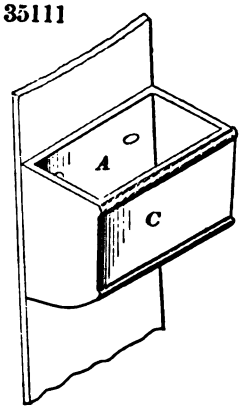

35112

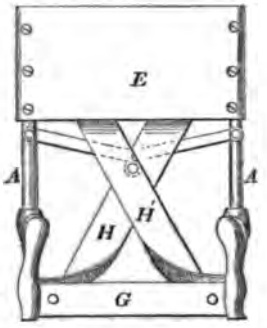

35113

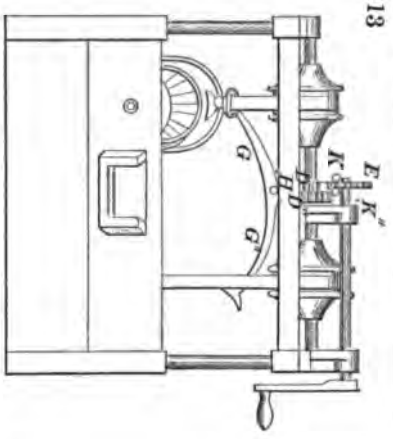

35114

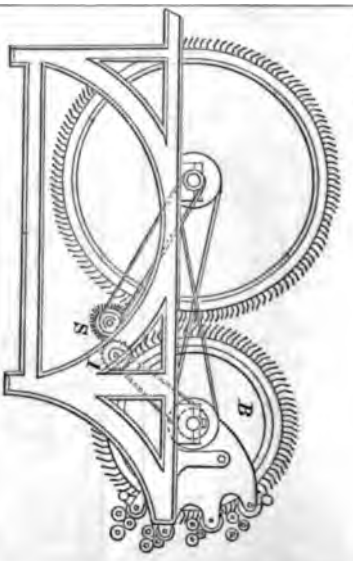

35115

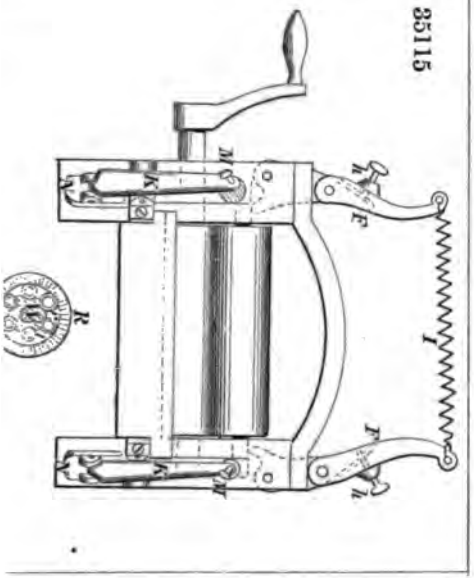

35116

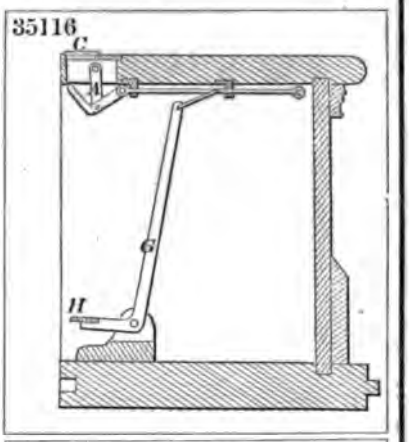

35117

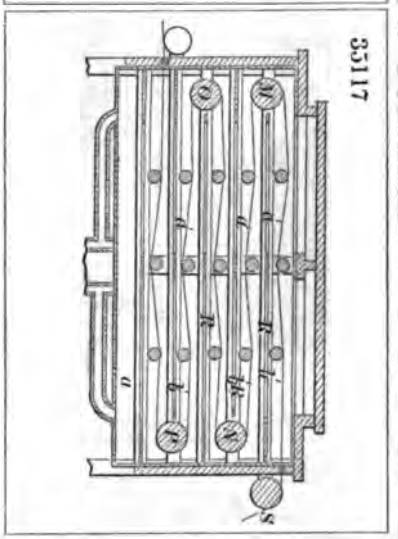

35118

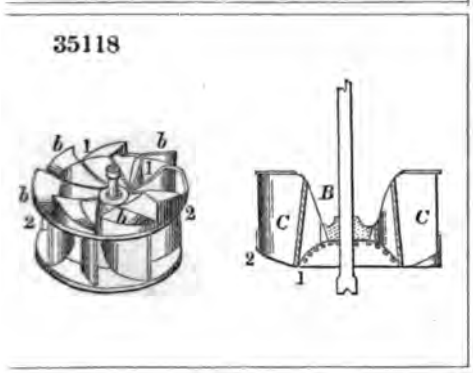

35119

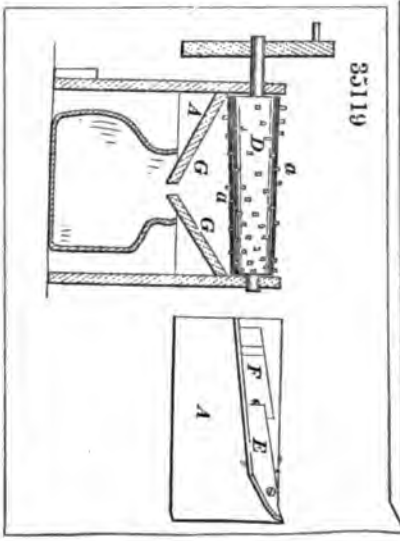

35120

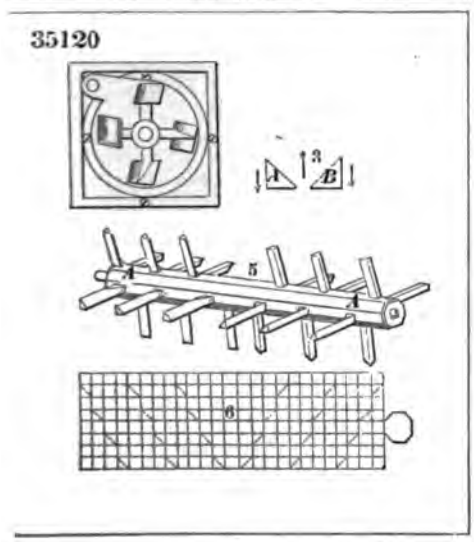

35121

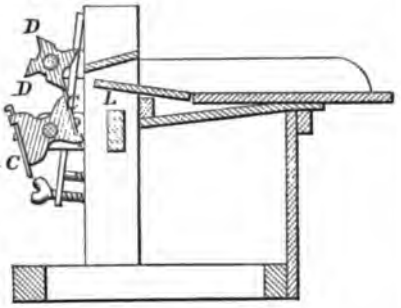

35122

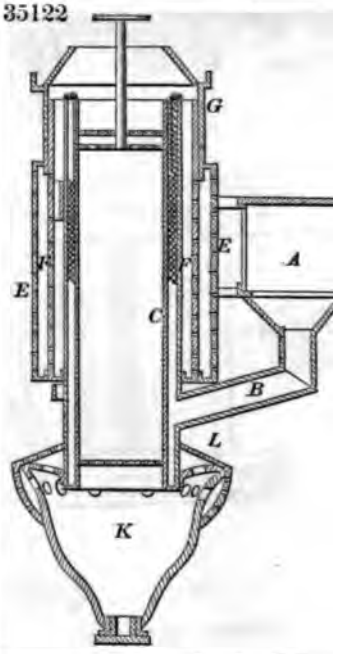

35124

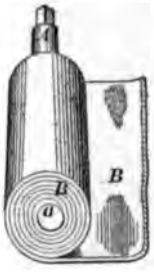

35126

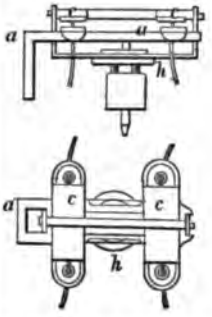

35125

35123

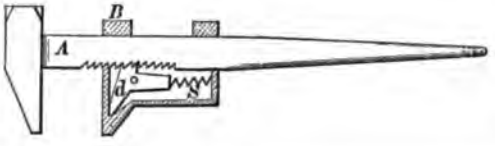

35127

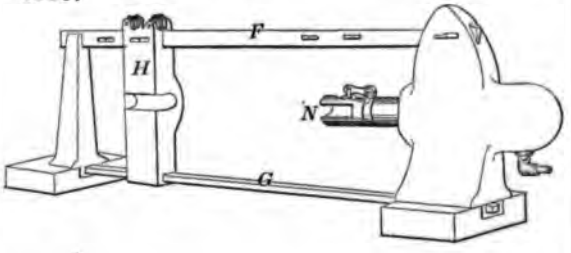

5128

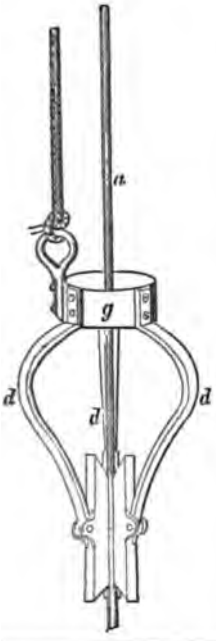

35129

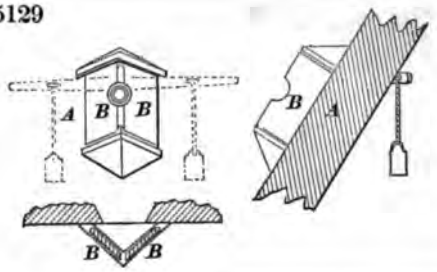

35130

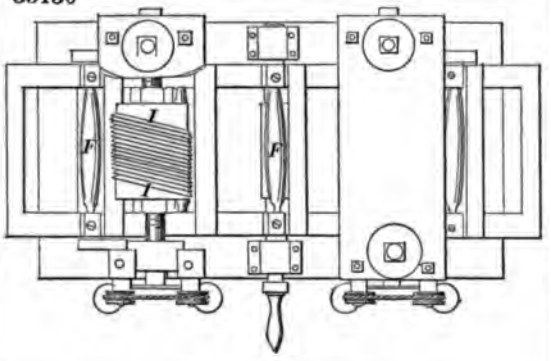

35131

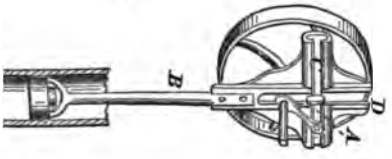

35133

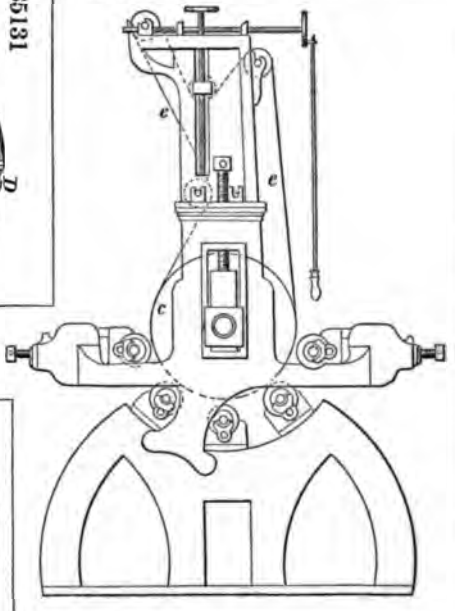

35132

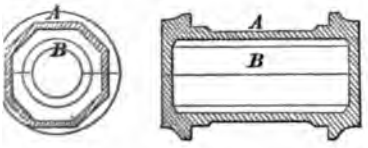

35134

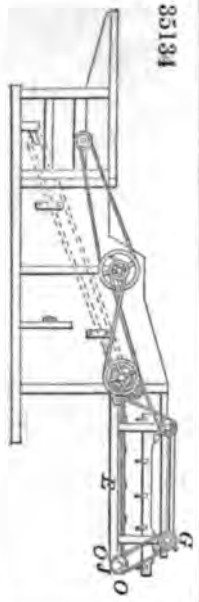

35135

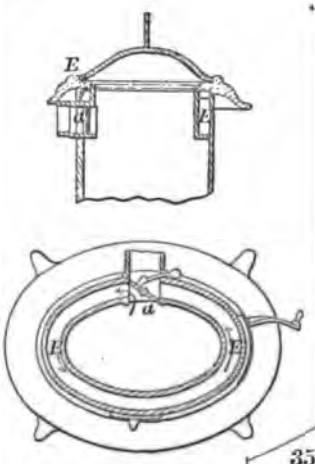

35138

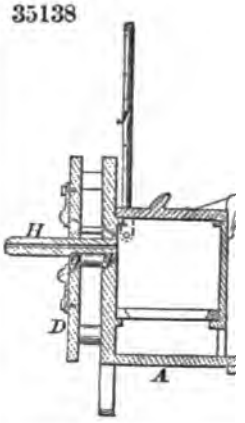

35137

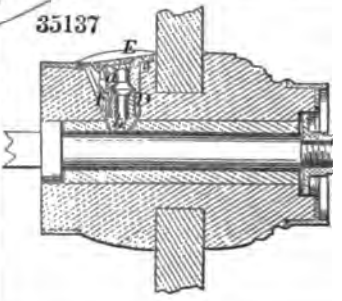

35136

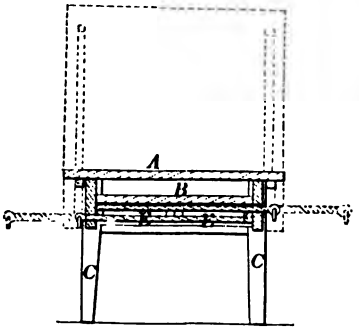

35139

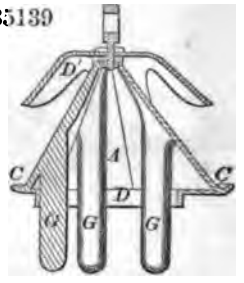

35140

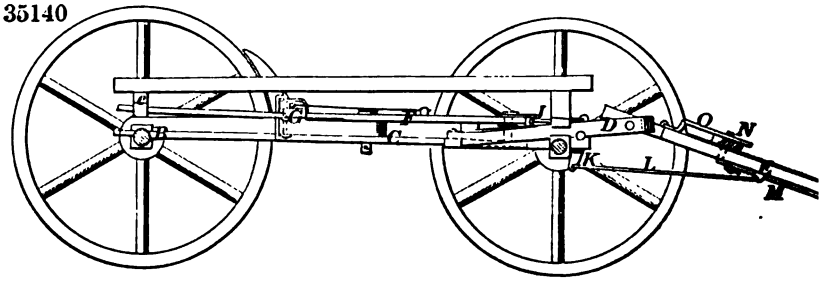

35141

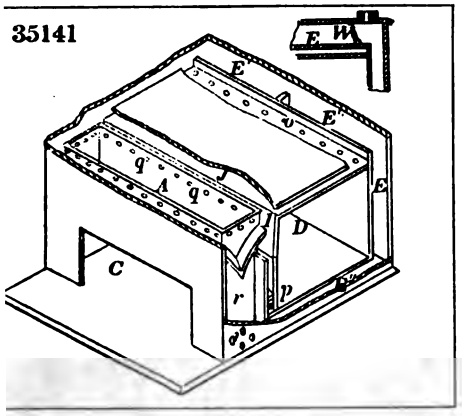

35142

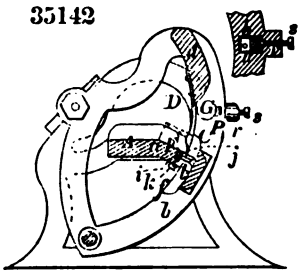

35143

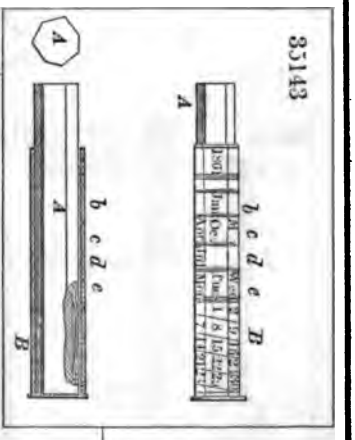

35144

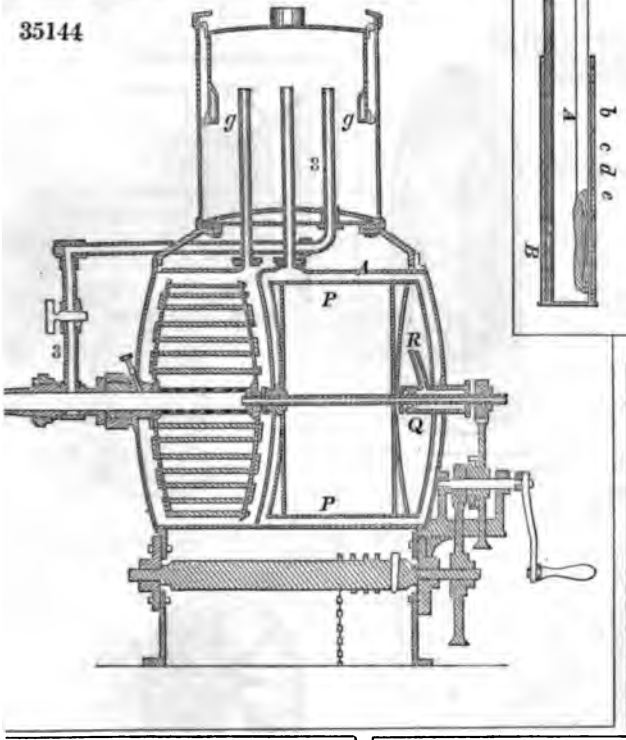

35145

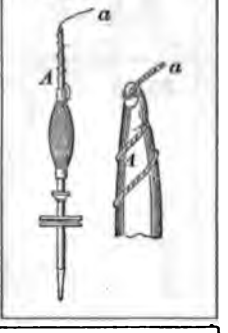

146

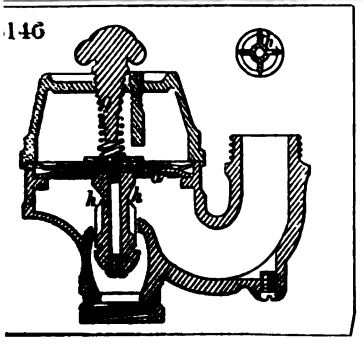

35147

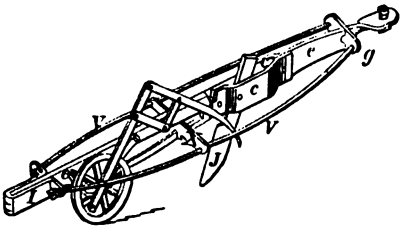

35148

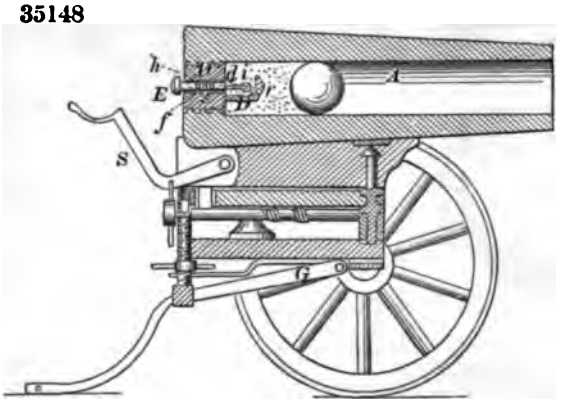

35150

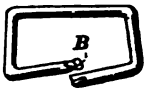

35151

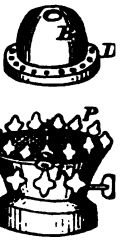

35152

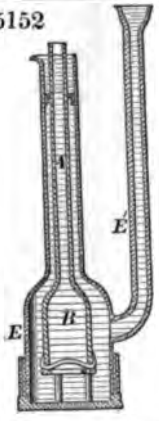

35153

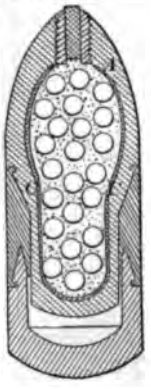

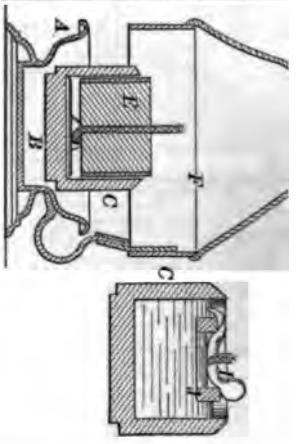

35155

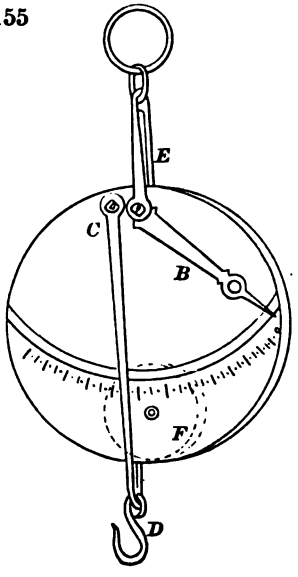

35156

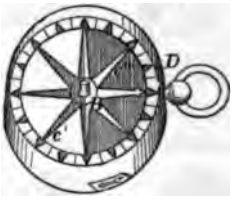

35157

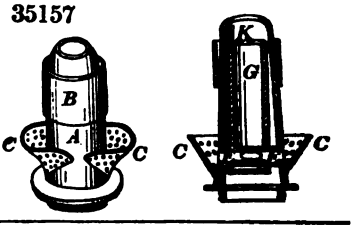

35158

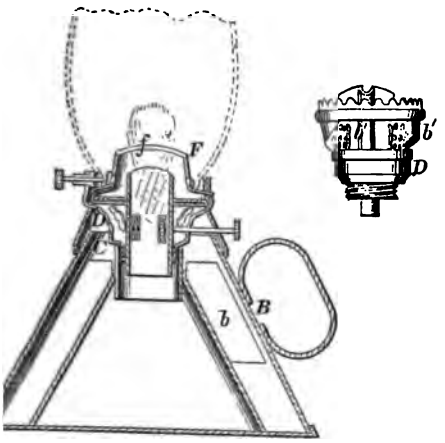

35159

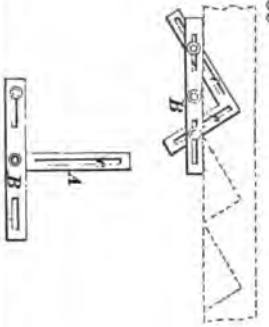

35160

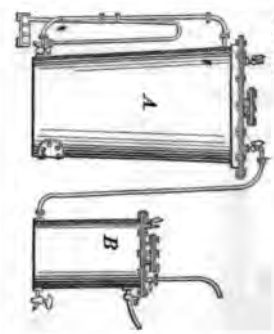

162

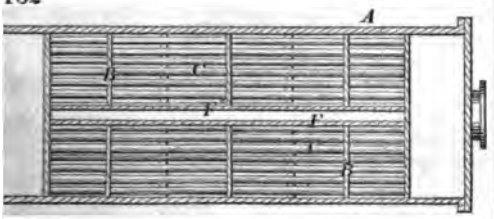

35163

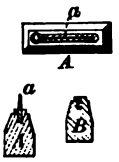

35164

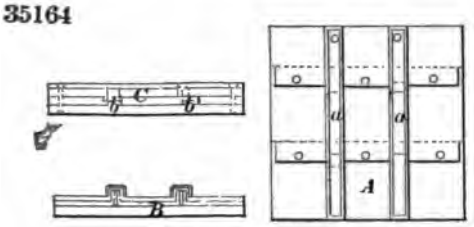

35166

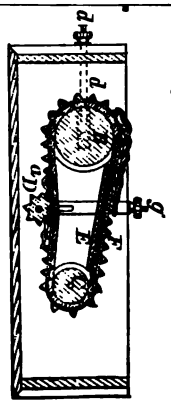

35165

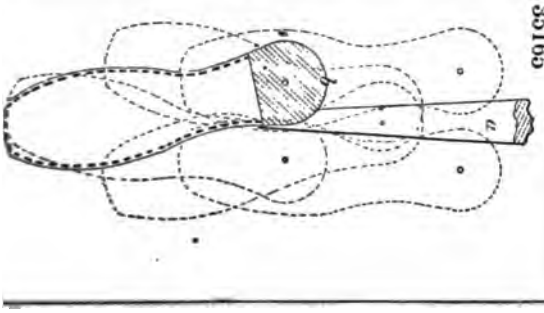

35167

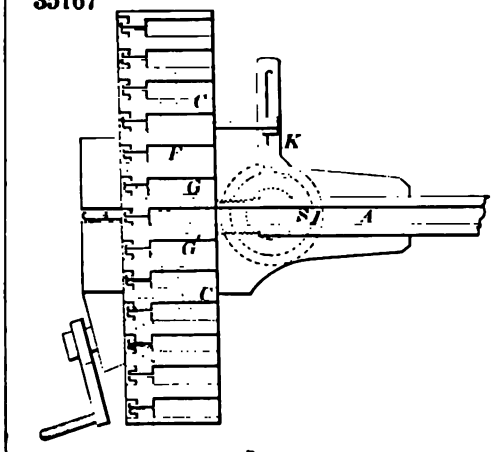

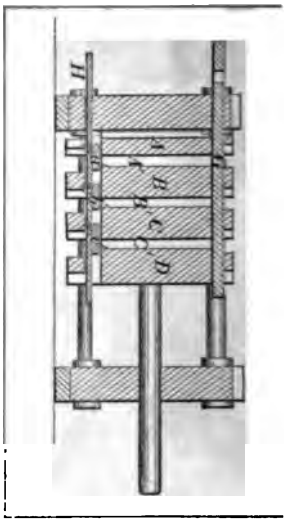

35169

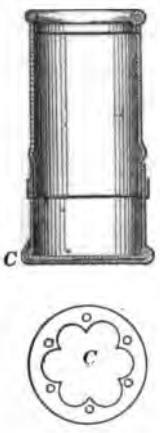

3517

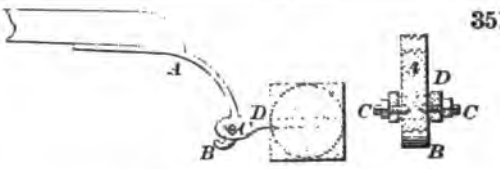

35171

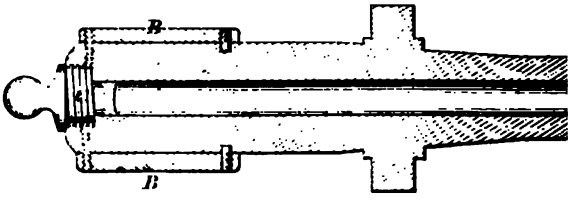

35172

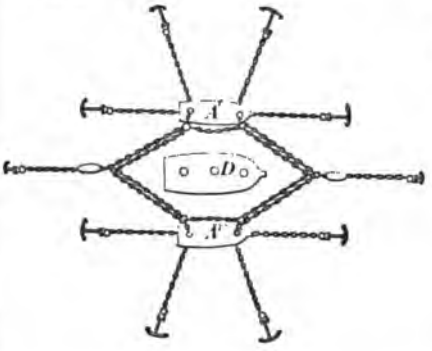

35173

175

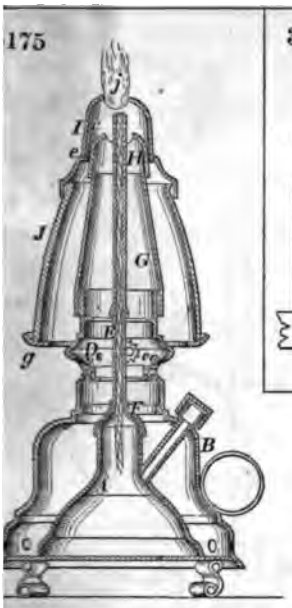

35174

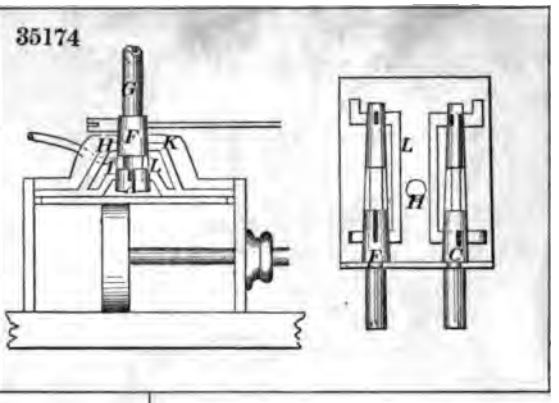

35176

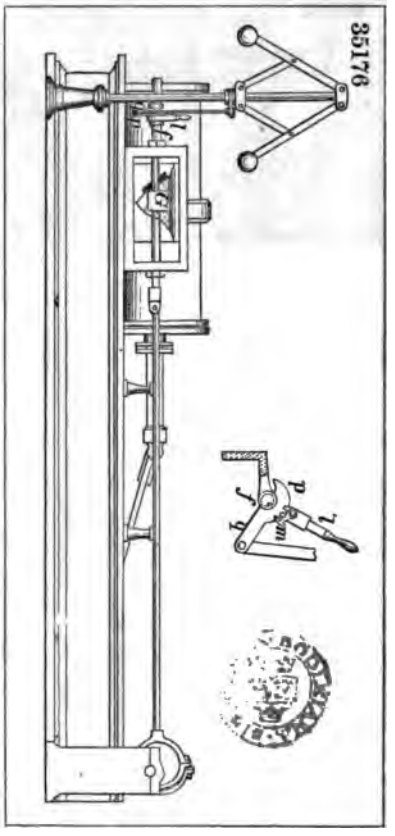

35177

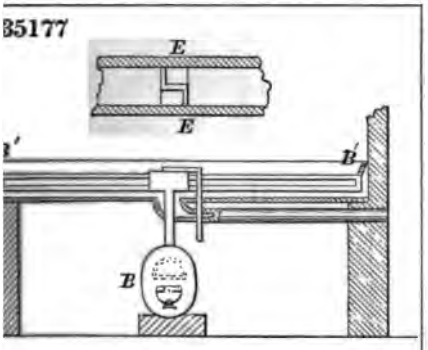

35178

35179

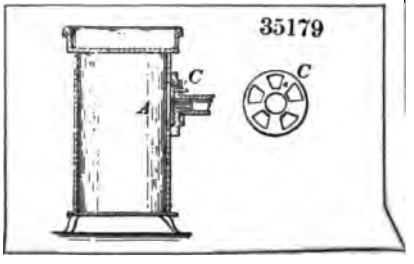

35180

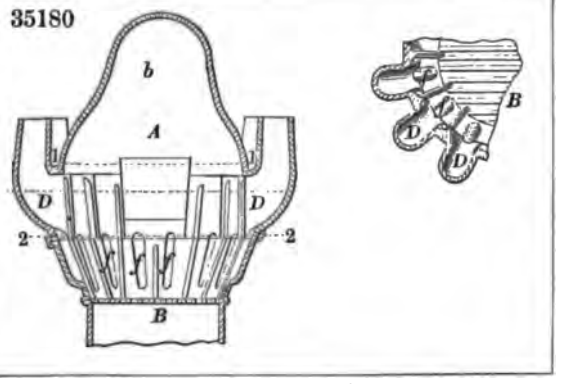

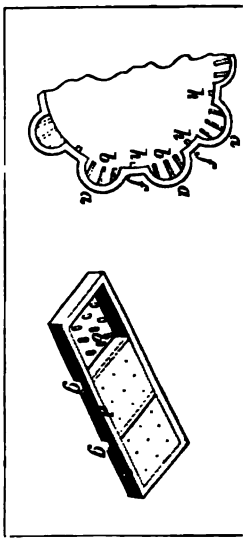

35182

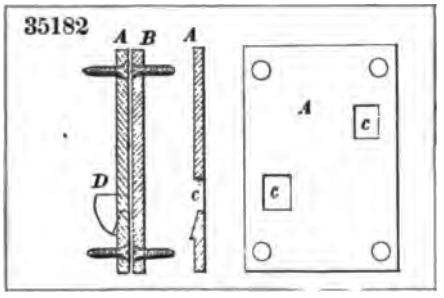

35183

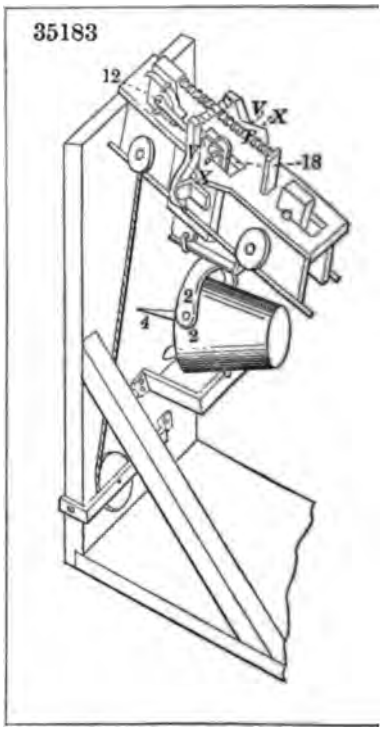

35184

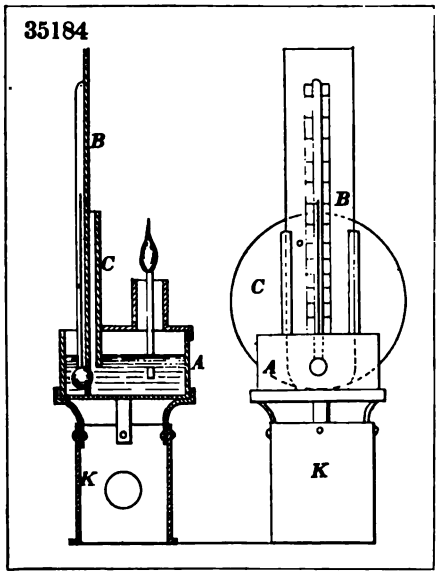

35186

35185

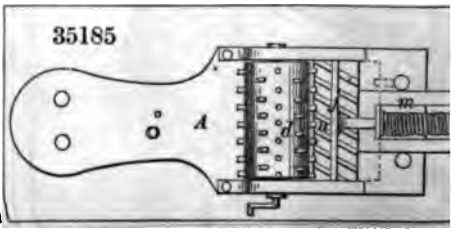

35187

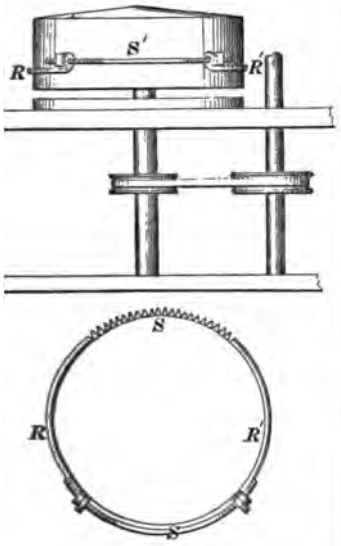

35188

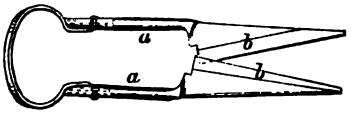

35189

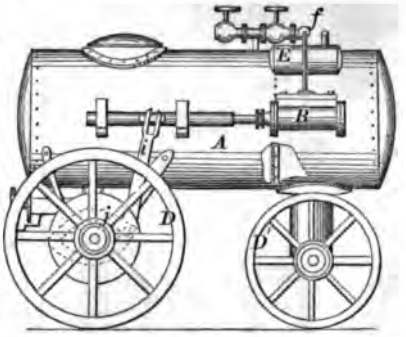

5190

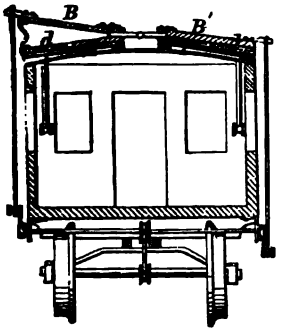

35191

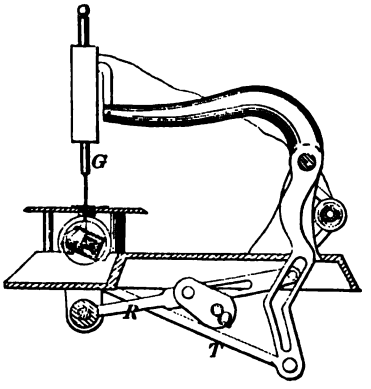

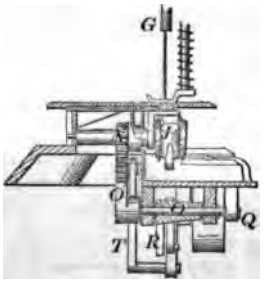

35192

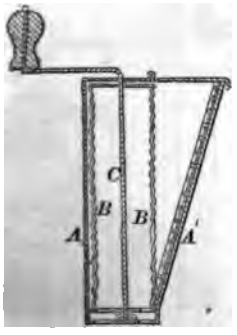

35180

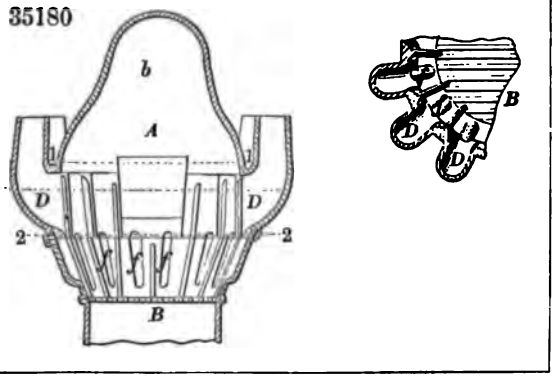

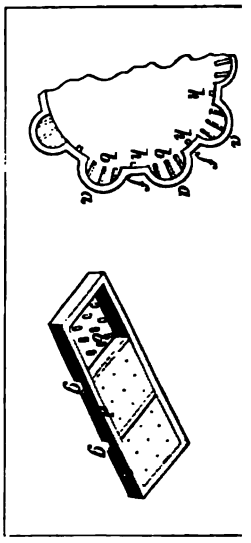

35182

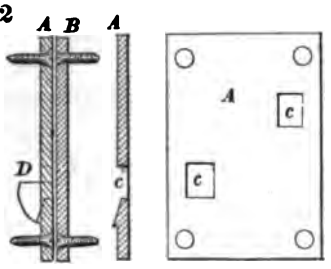

35183

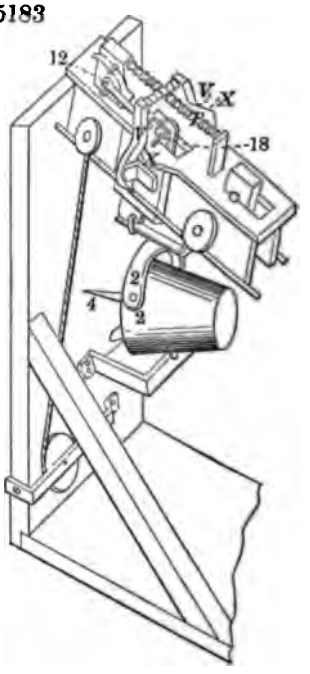

35184

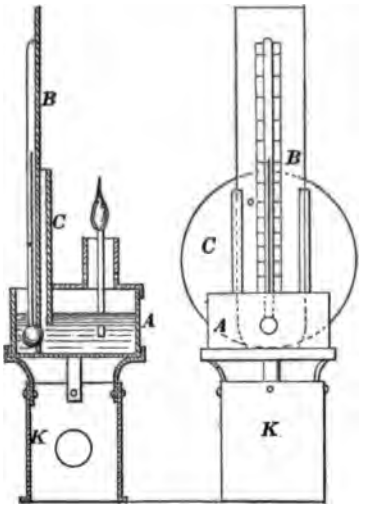

35186

35185

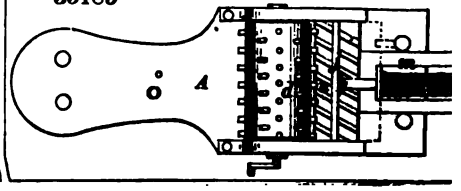

35187

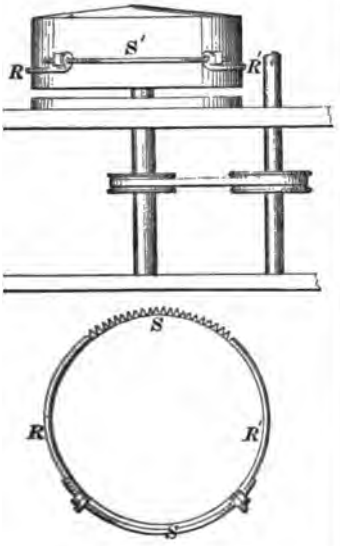

35188

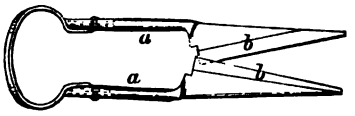

35189

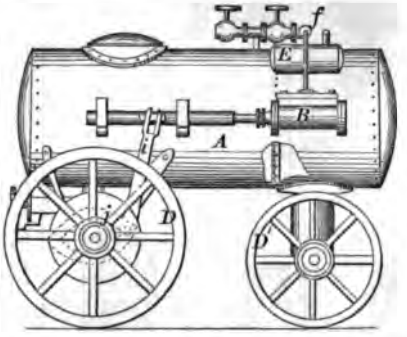

5190

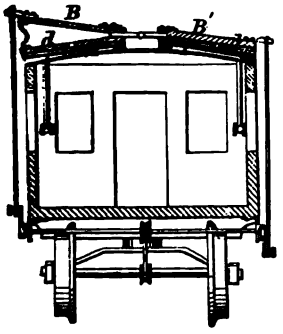

35191

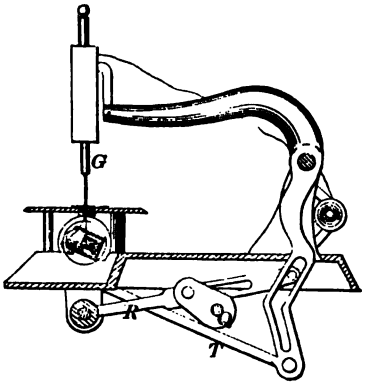

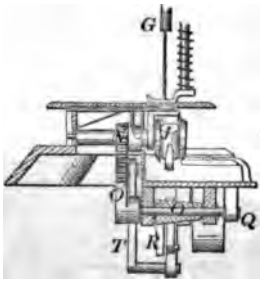

35192

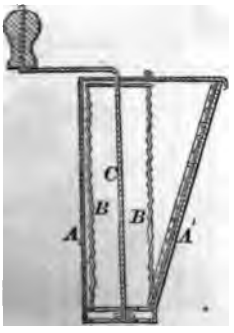

35193

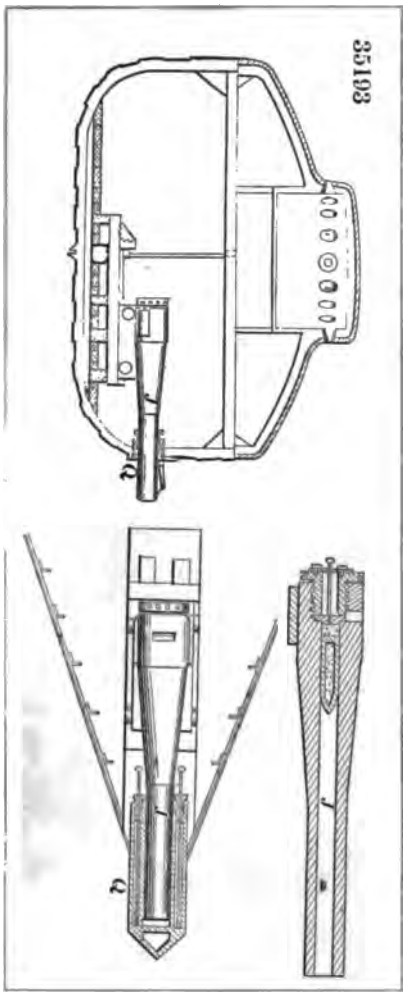

35194

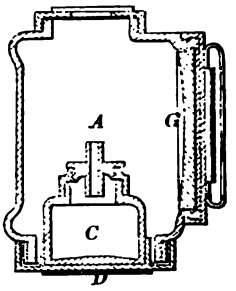

35195

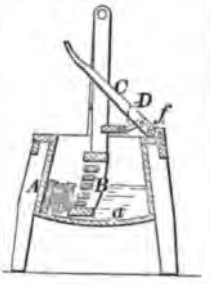

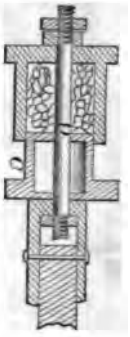

35198

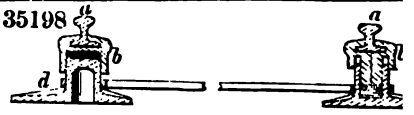

35197

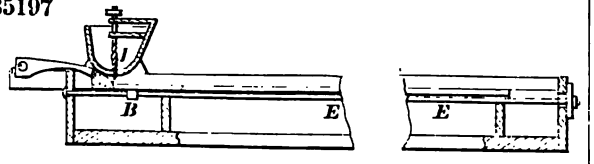

35199

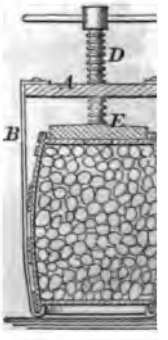

35200

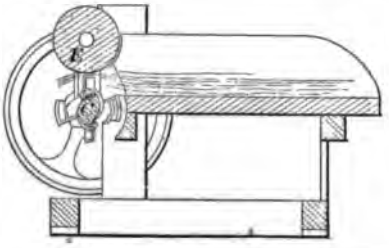

35203

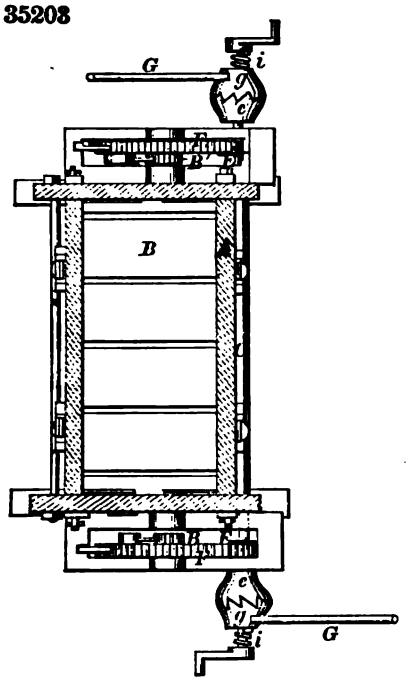

35202

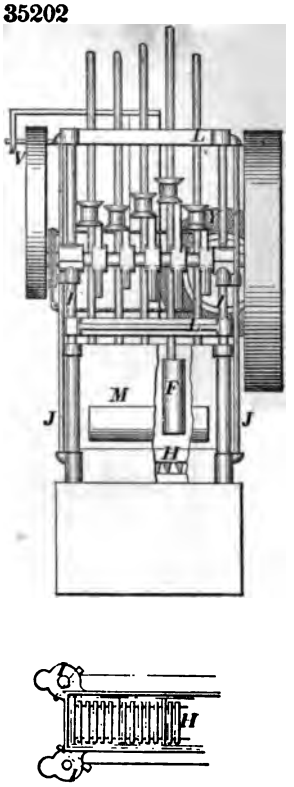

35201

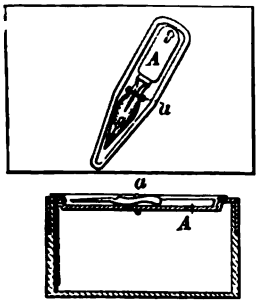

35205

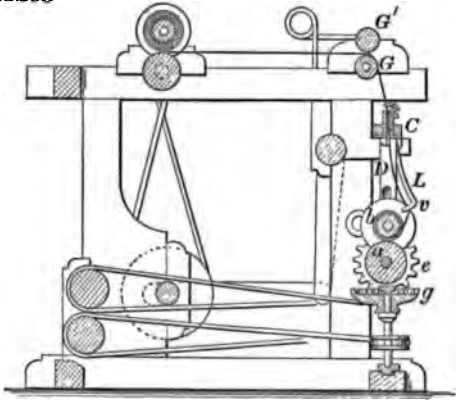

35206

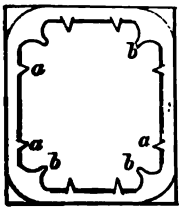

35204

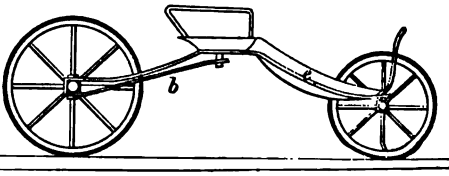

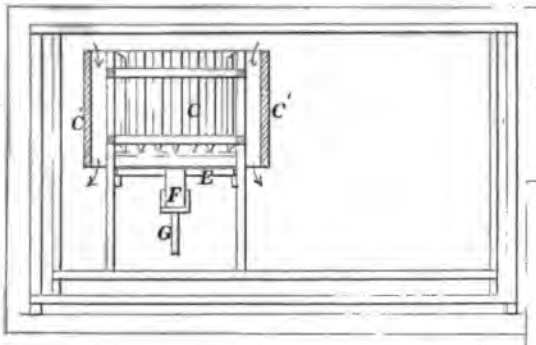

35208

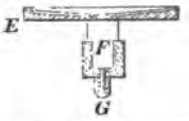

35207

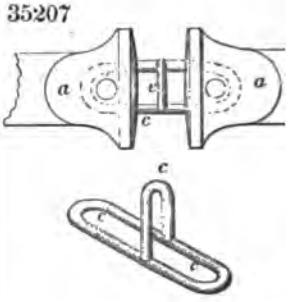

35209

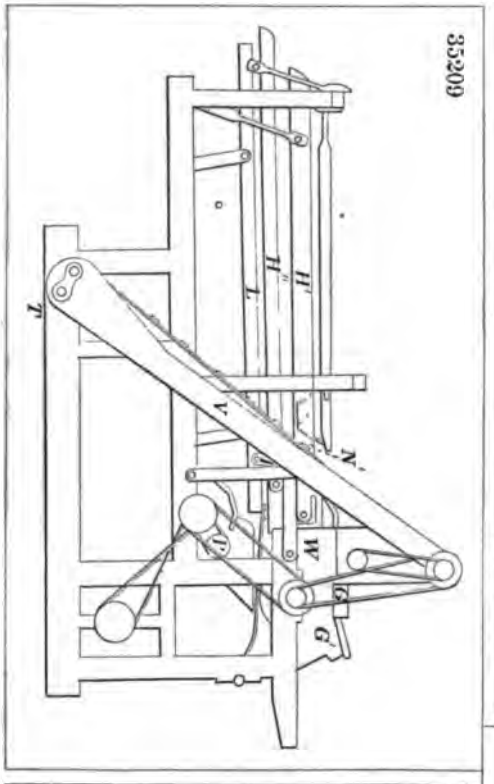

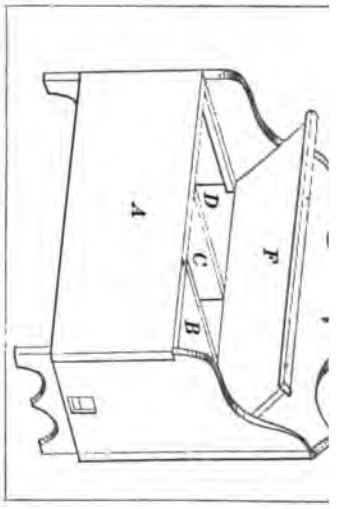

35211

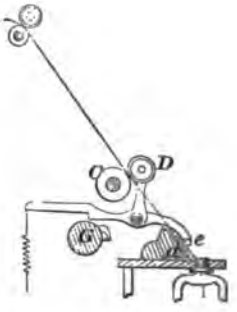

35212

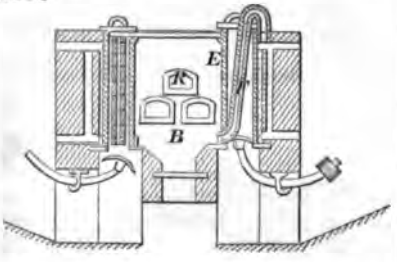

213

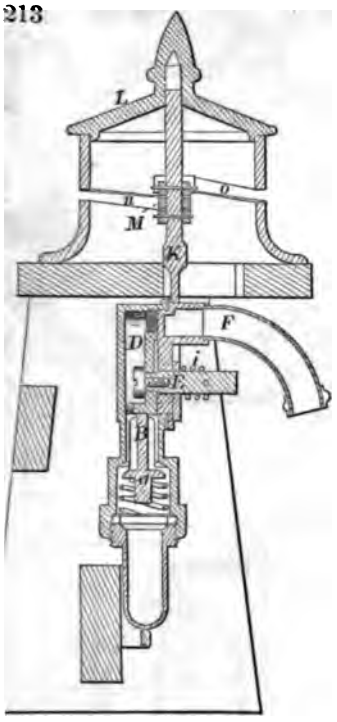

35214

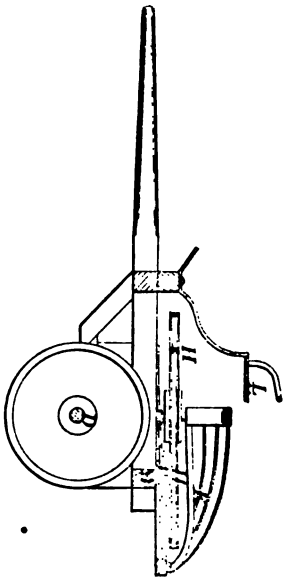

35216

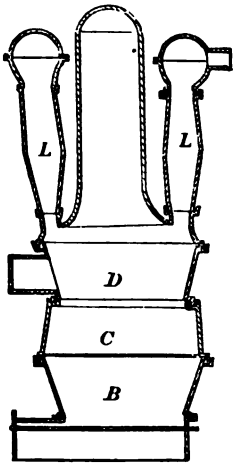

35217

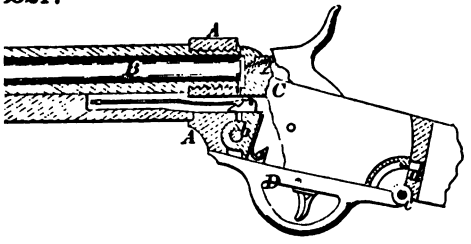

5219

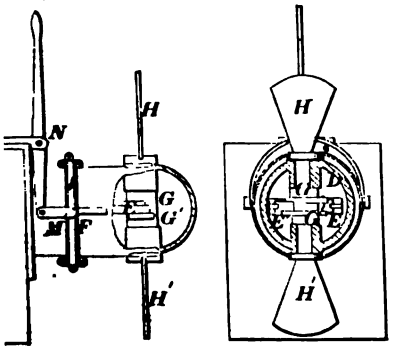

35218

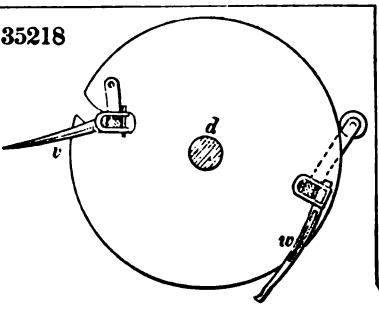

35221

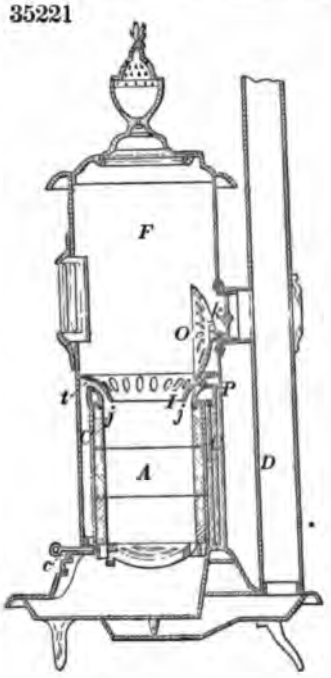

35220

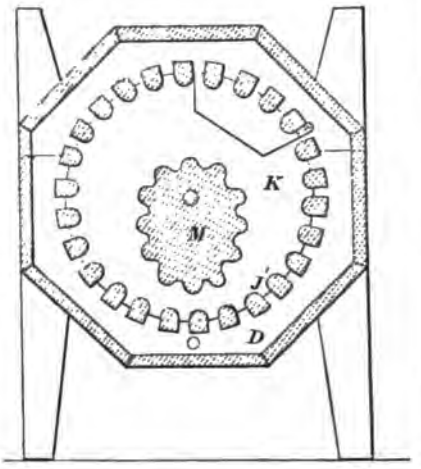

35222

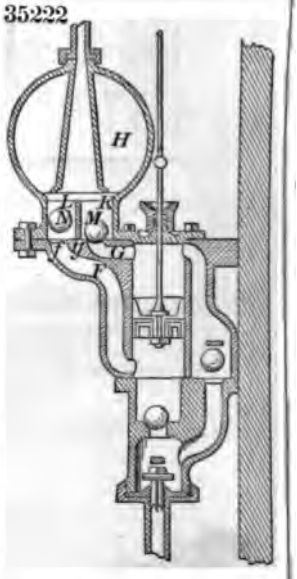

35223

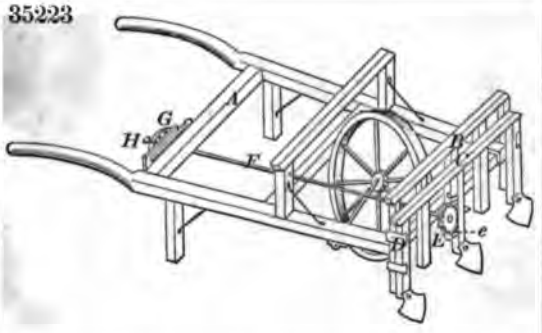

35225

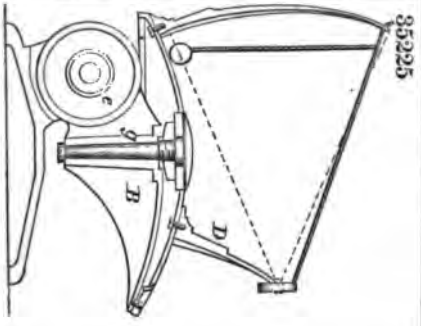

35224

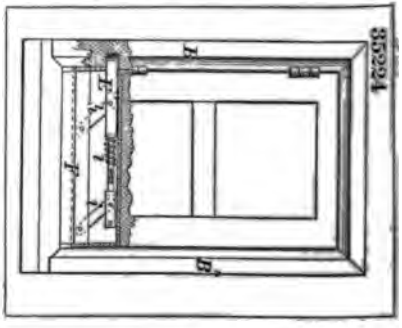

5226

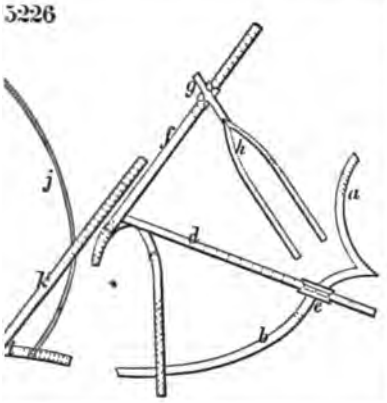

35228

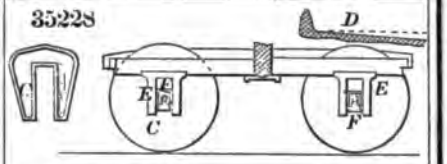

35229

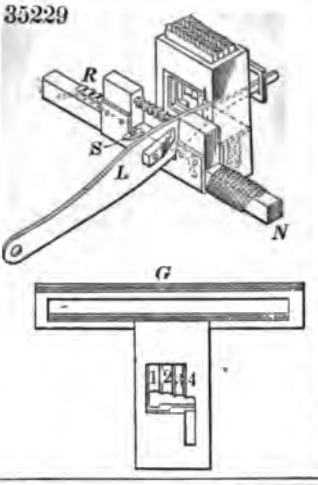

35227

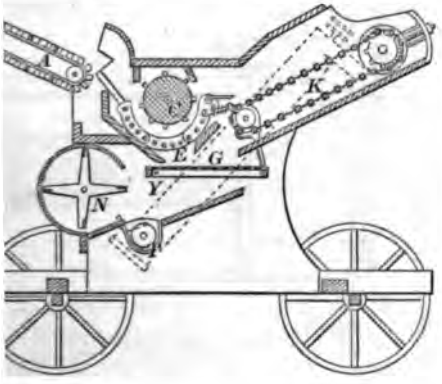

35234

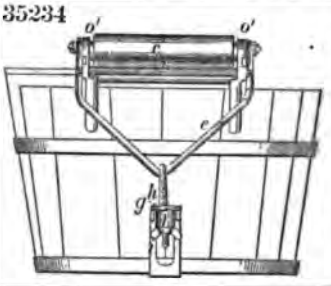

35233

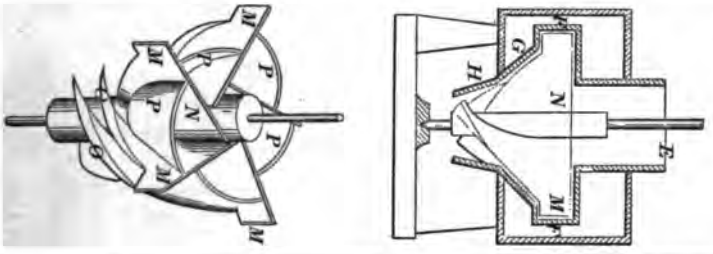

35230

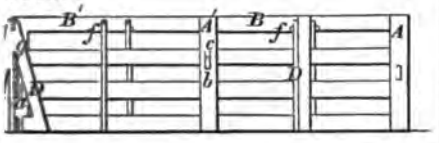

35232

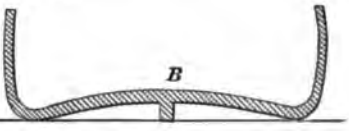

35235

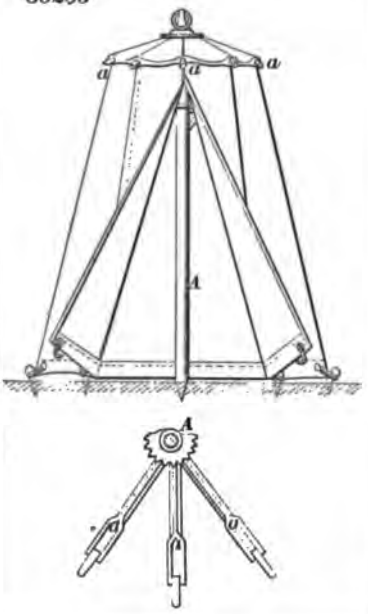

35236

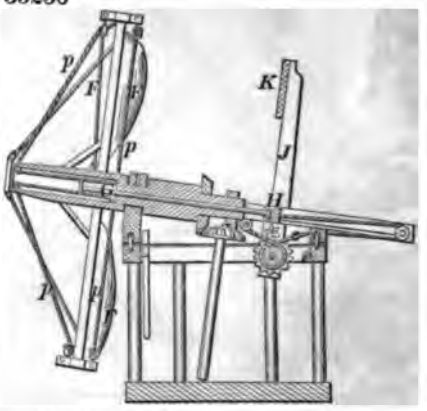

35237

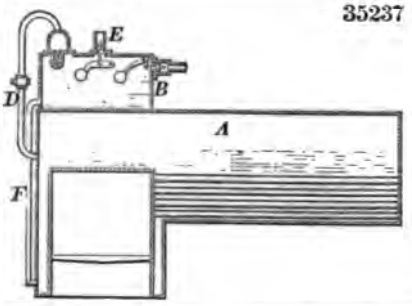

35238

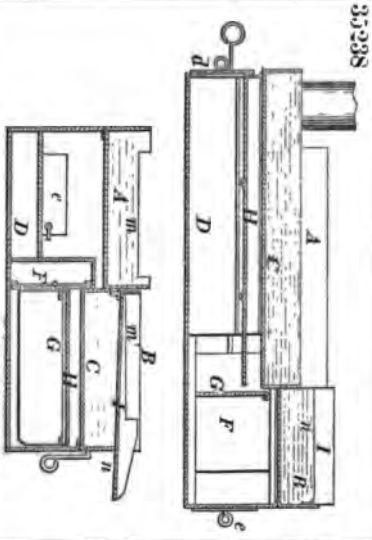

35240

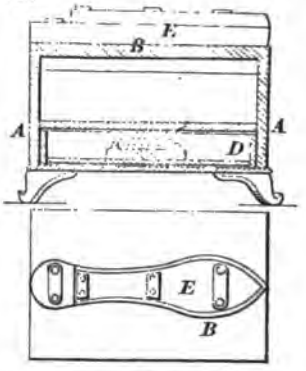

35241

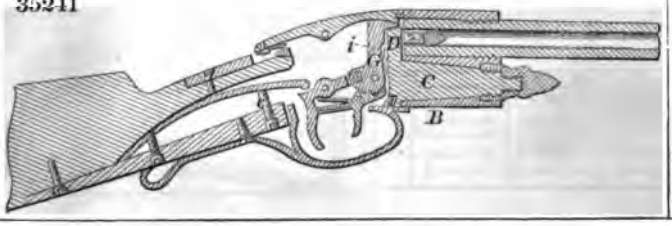

35239

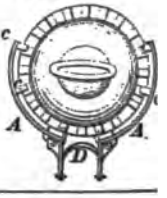

35242

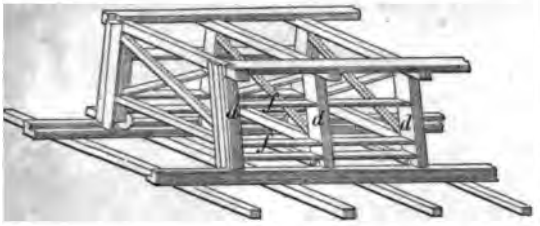

35243

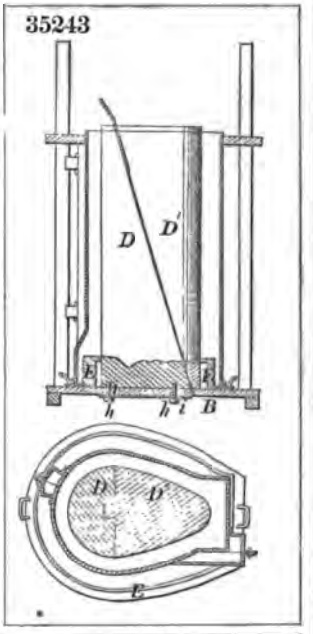

35247

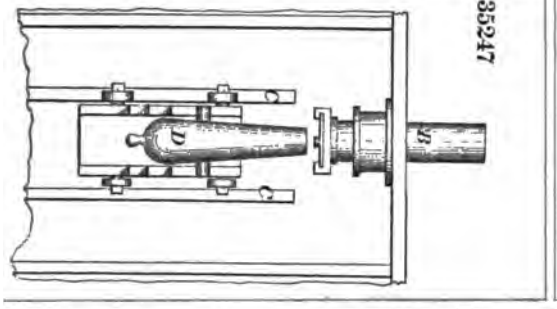

35244

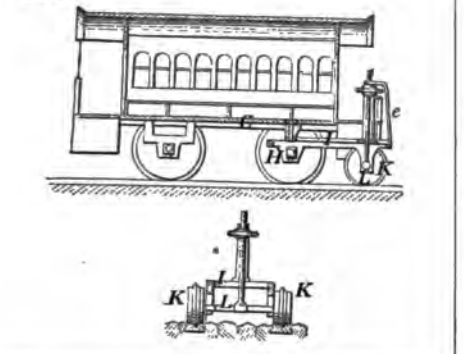

35245

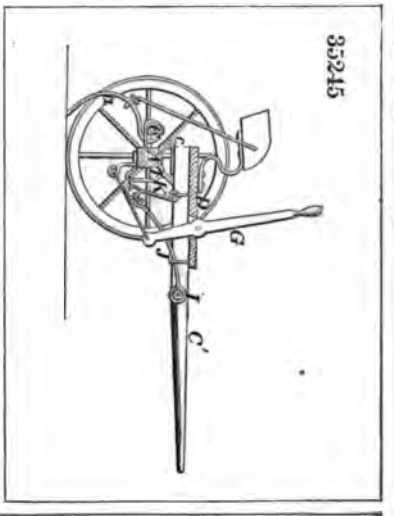

35249

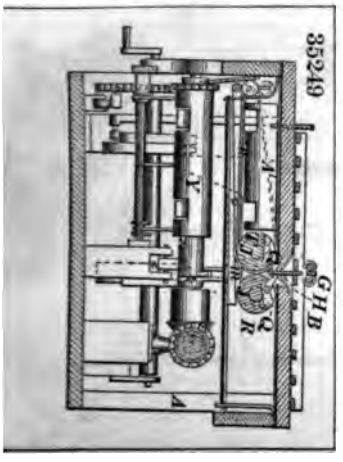

35248

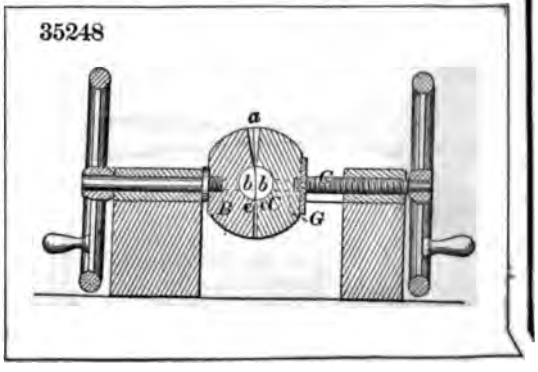

35250

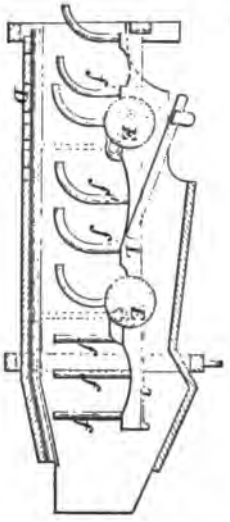

35251

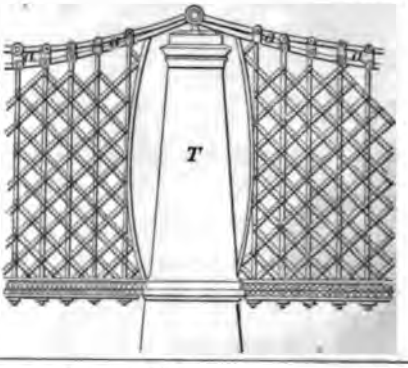

35252

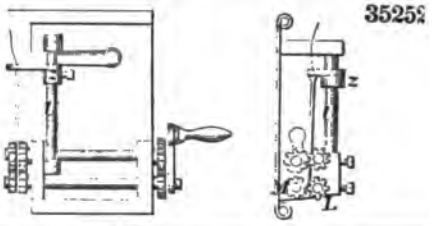

35254

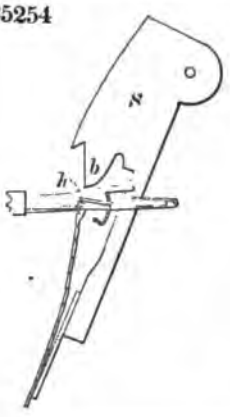

35253

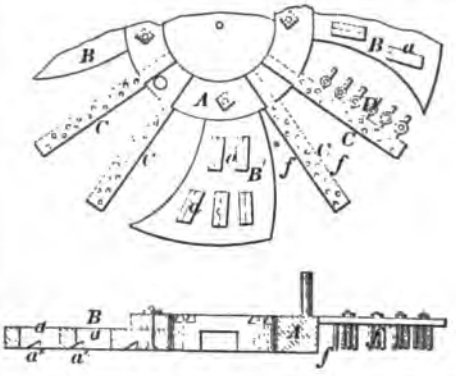

35255

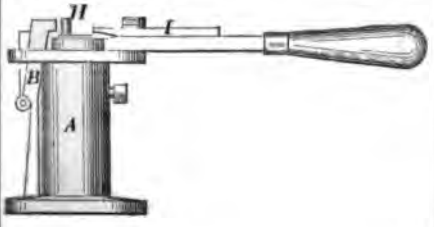

35256

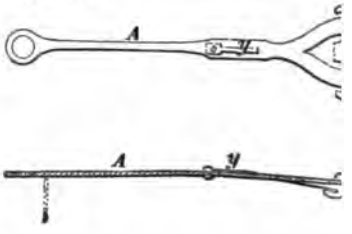

5257

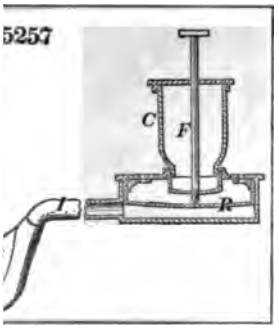

35259

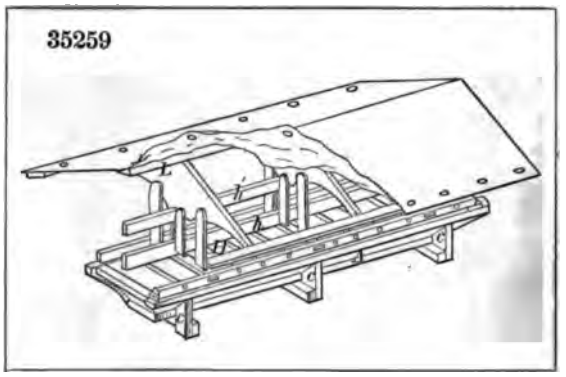

258

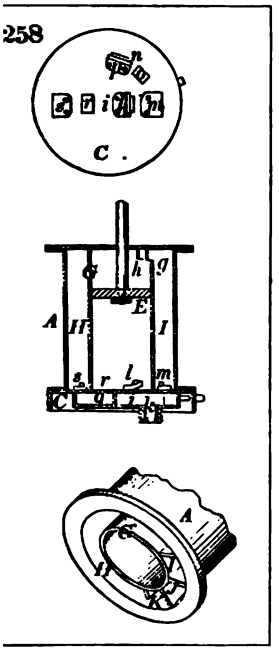

35260

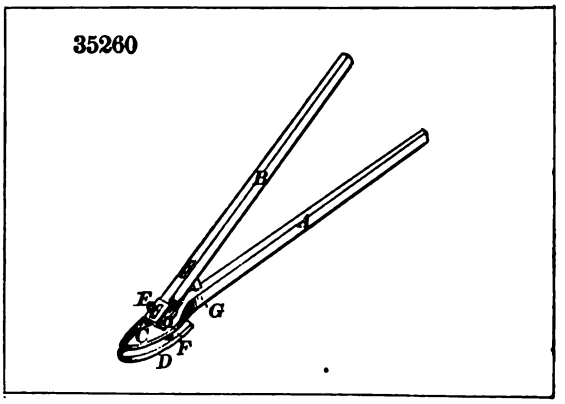

35261

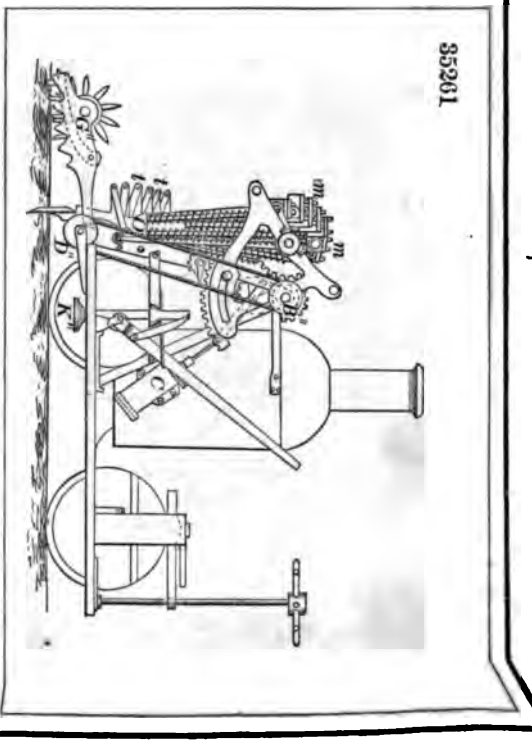

35262

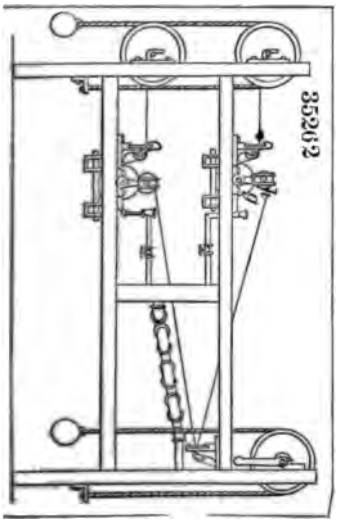

35263

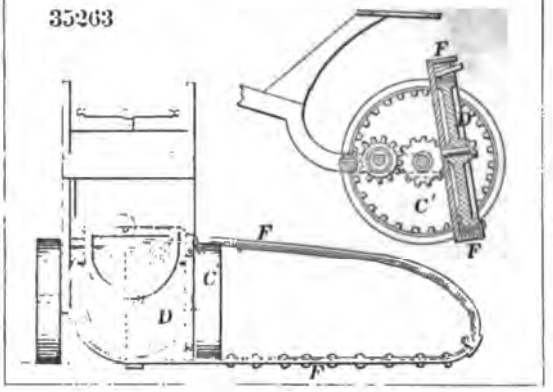

35264

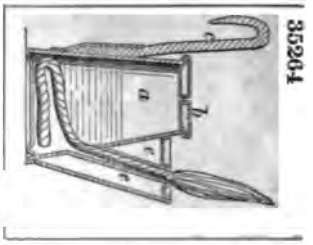

35265

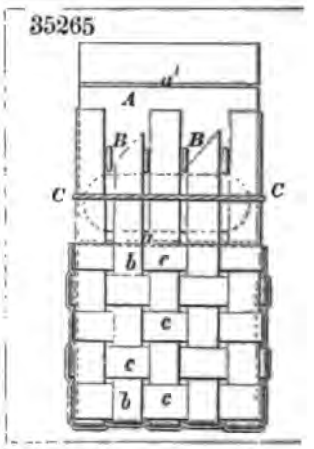

35266

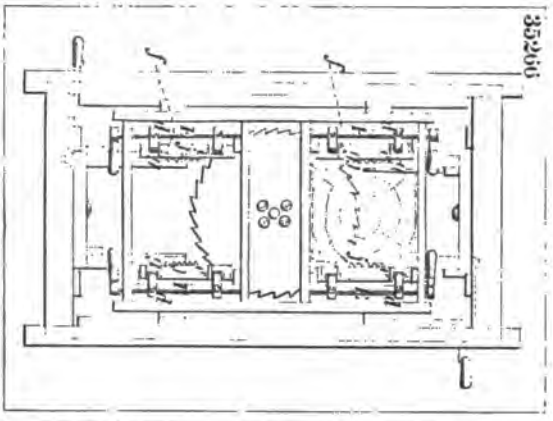

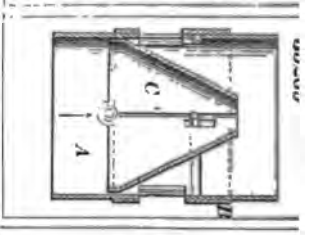

35268

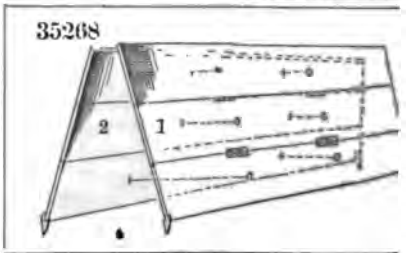

35270

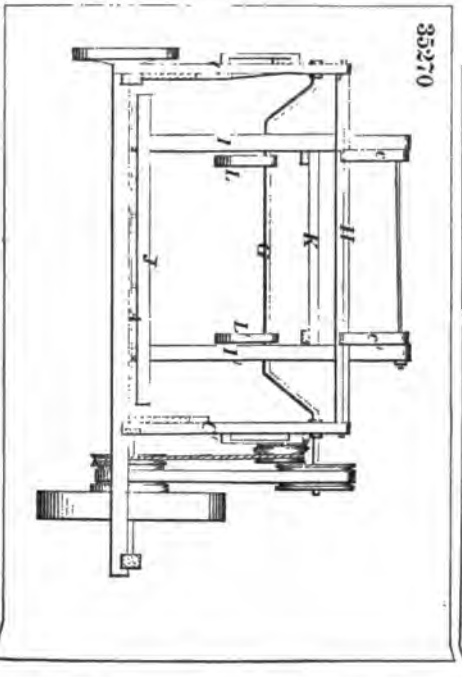

35267

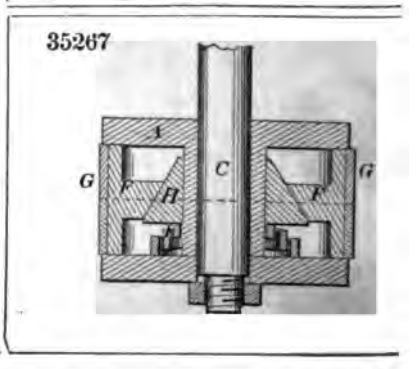

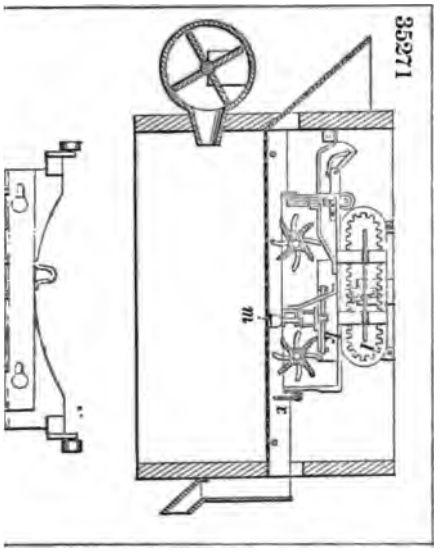
35271

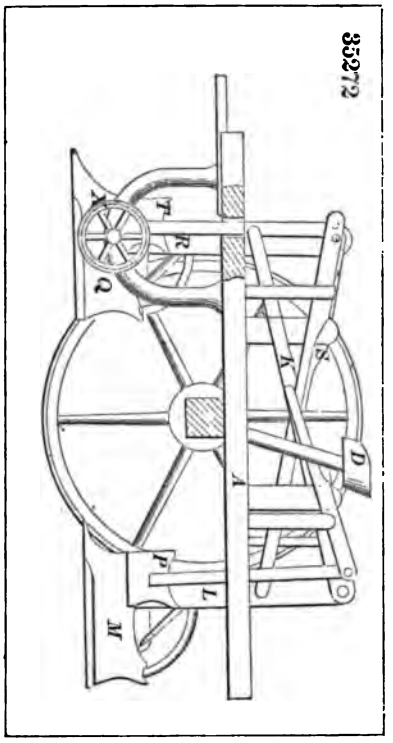
35272

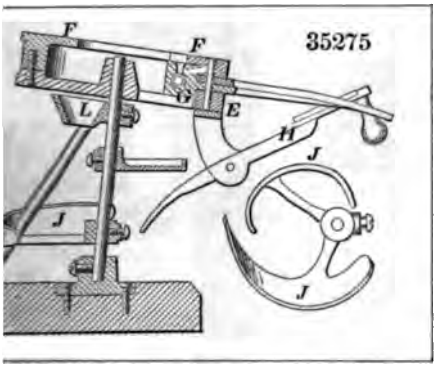
35275

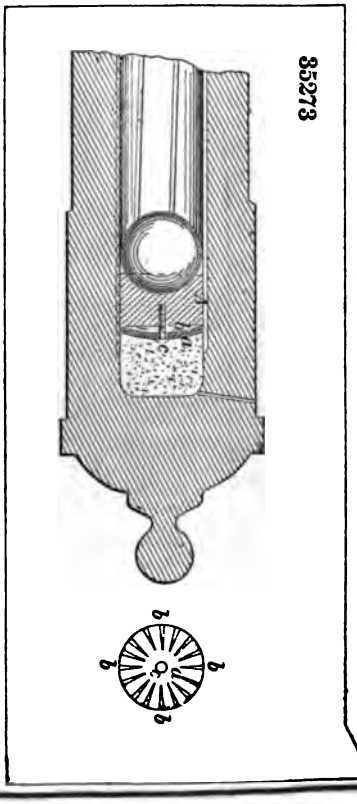
35273

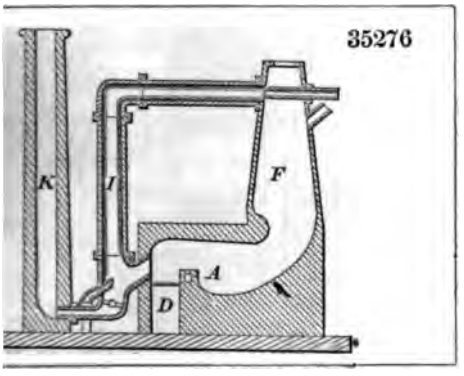
35276

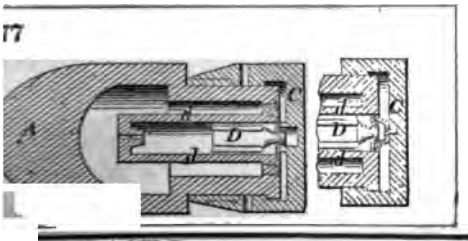
77

35282

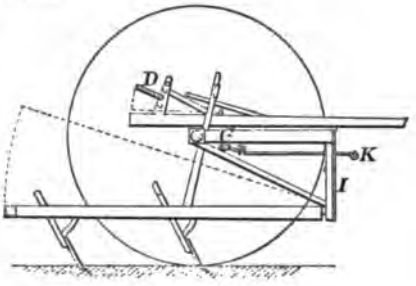

35283

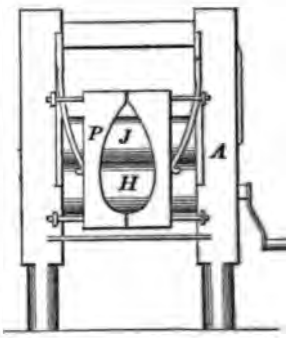

35281

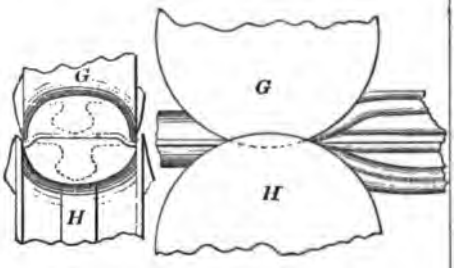

35278

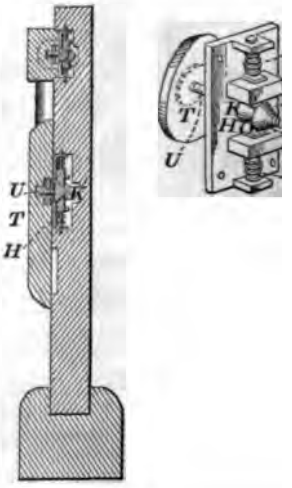

35280

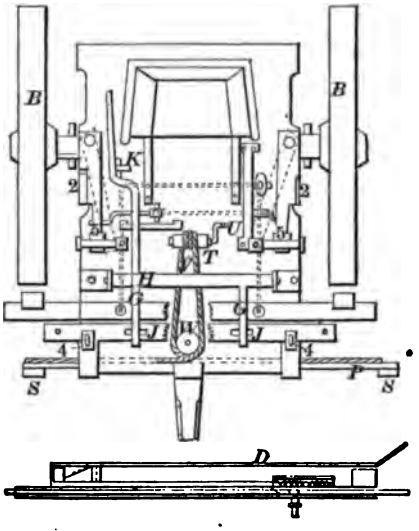

35279

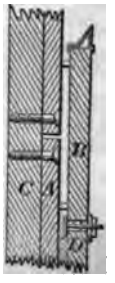

35284

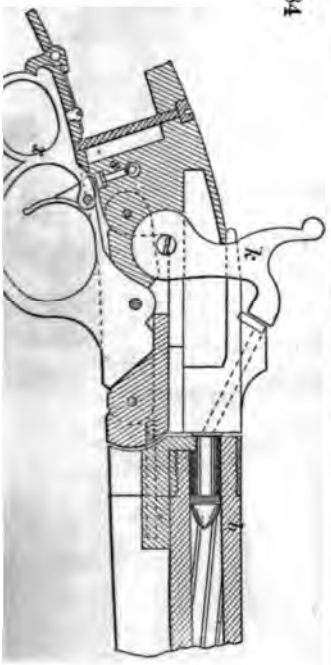

35286

35285

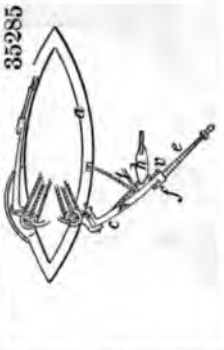

35287

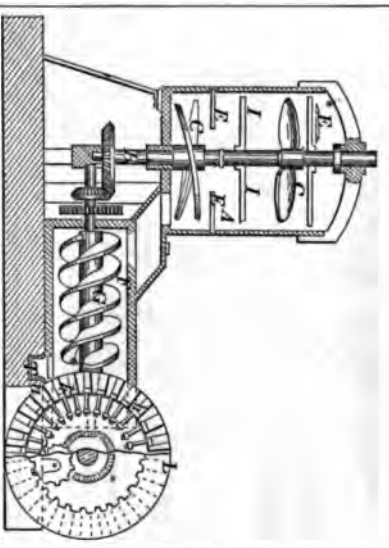

35288

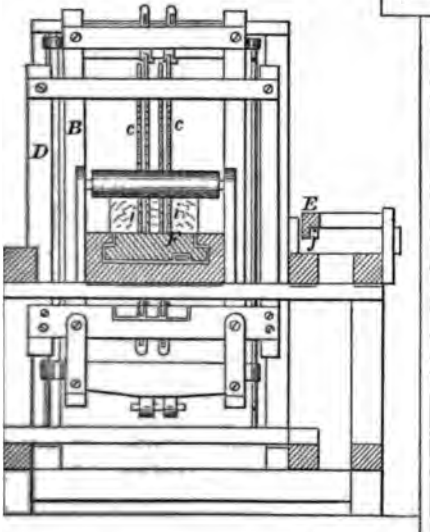

35290

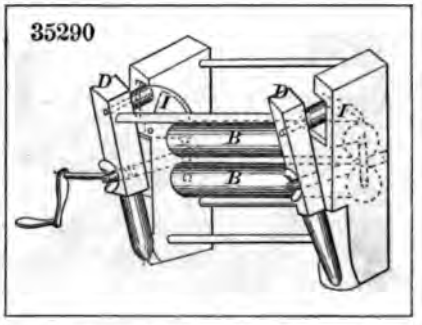

35289

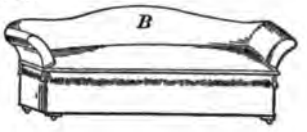

35291

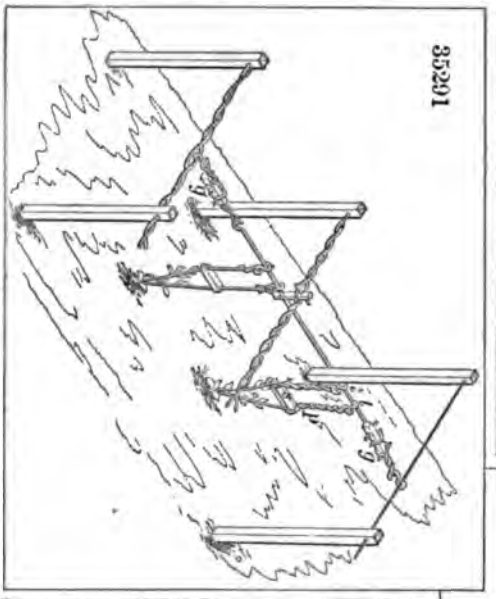

35292

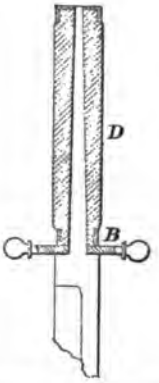

35294

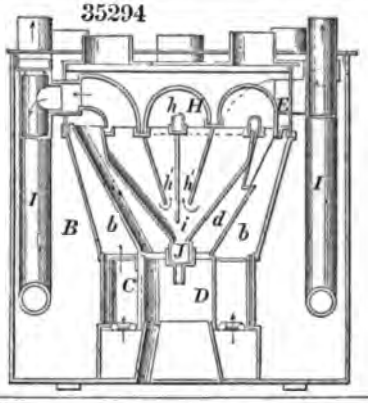

35295

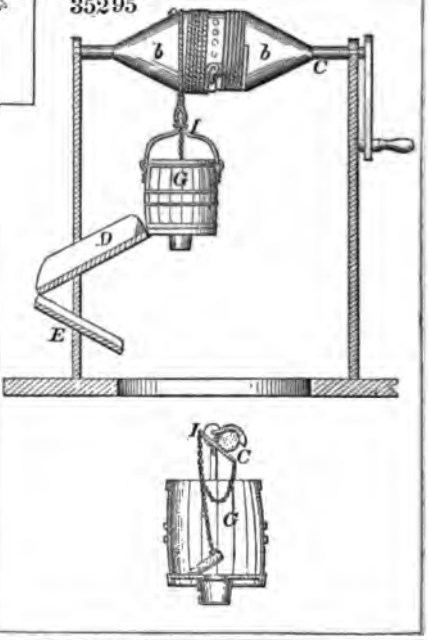

35297

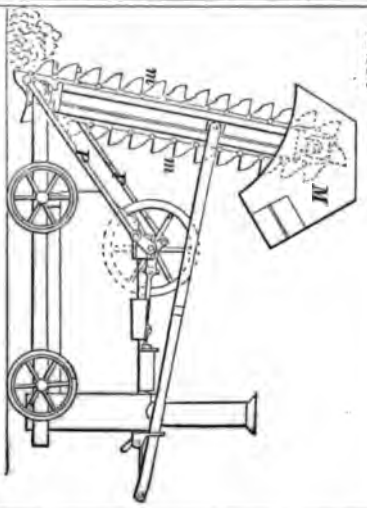

35296

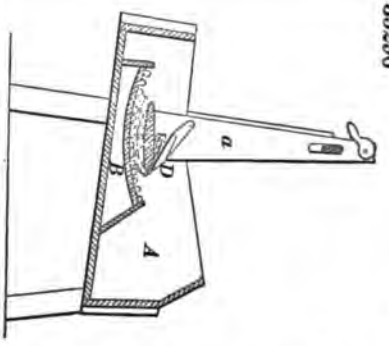

35298

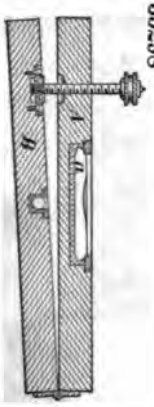

35299

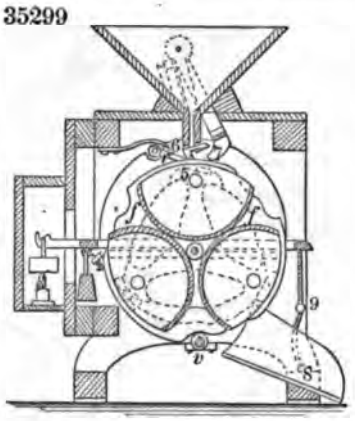

35300

35302

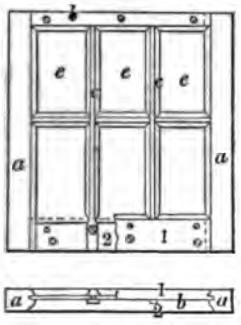

35301

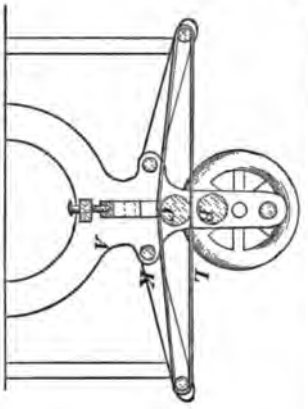

35302

35304

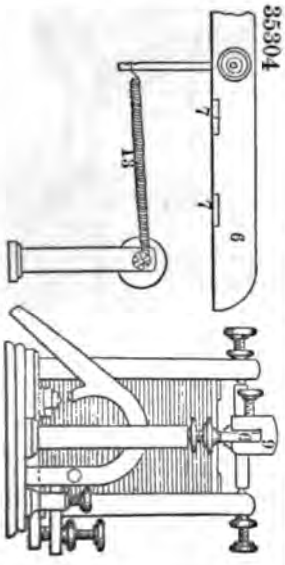

35305

35306

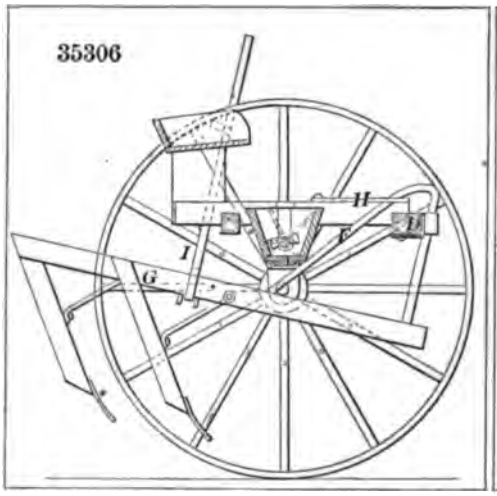

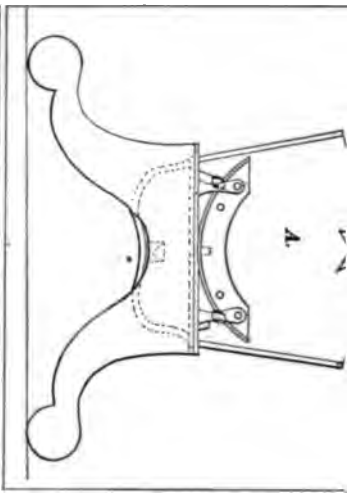

35308

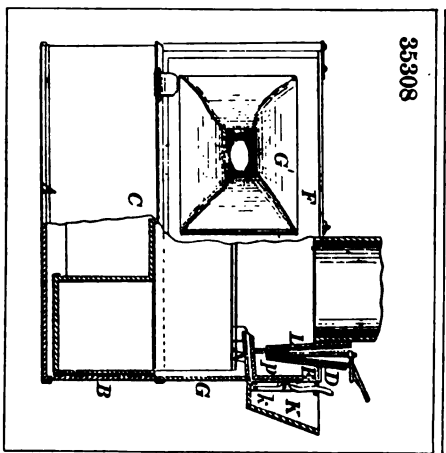

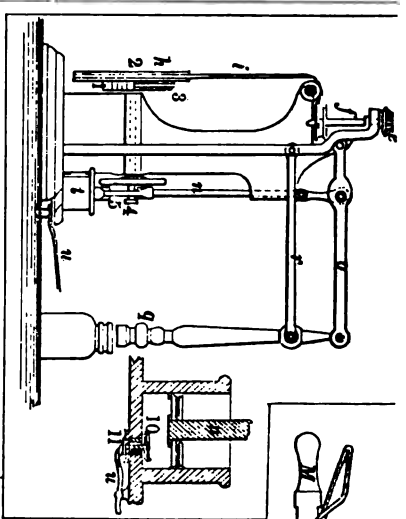

35310

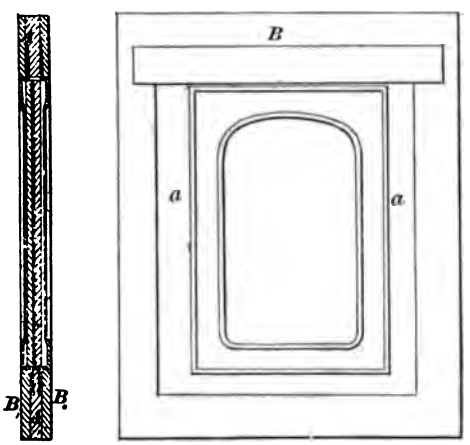

35312

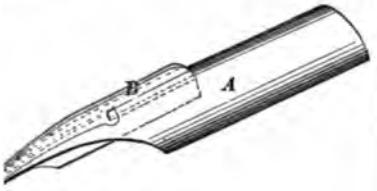

35313

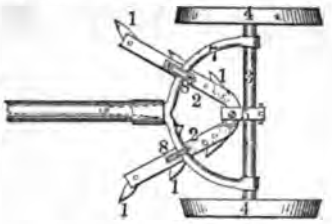

35314

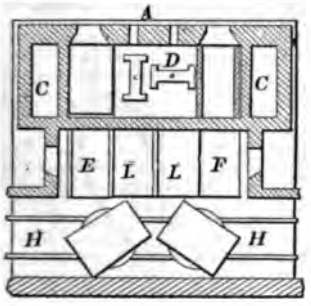

35315

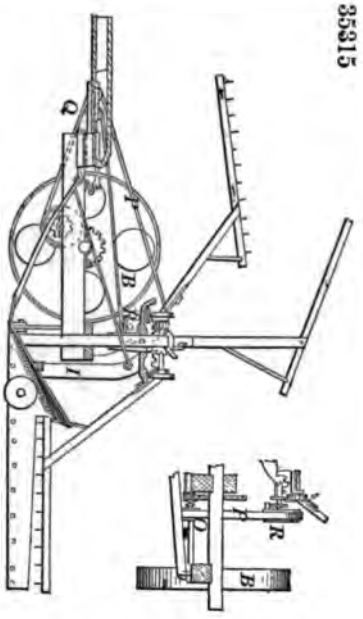

5317

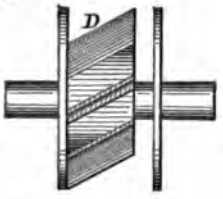

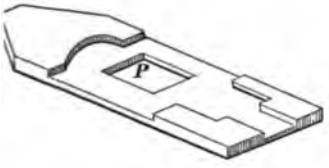

35318

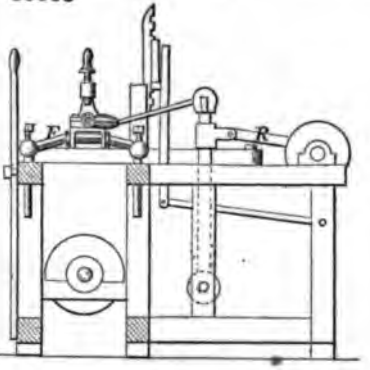

5316

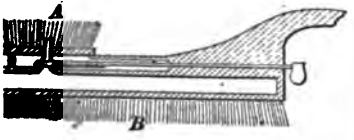

35320

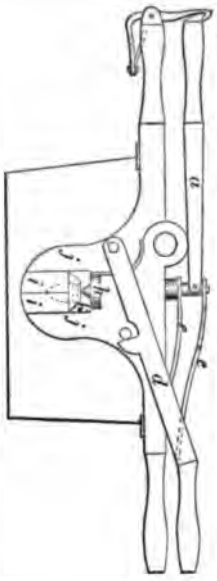

35319

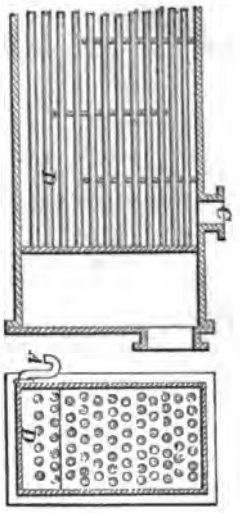

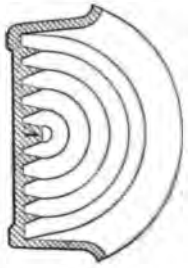

35322

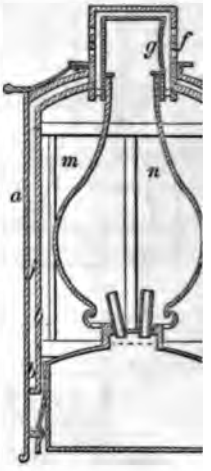

35323

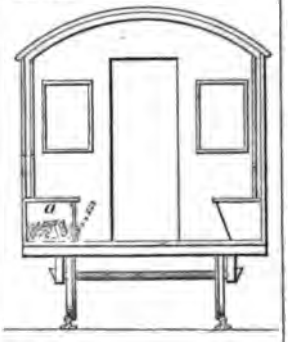

35325

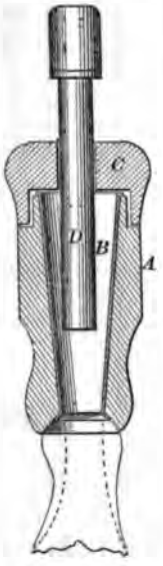

35324

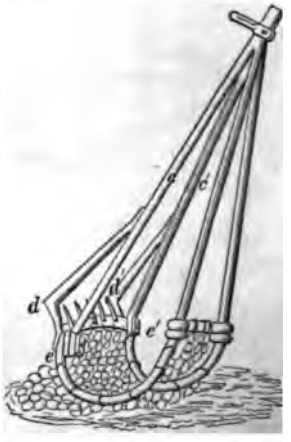

35326

35327

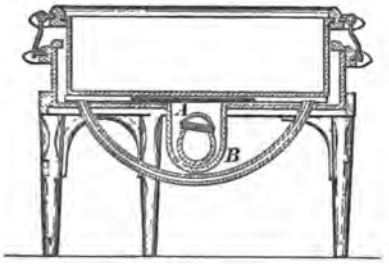

35328

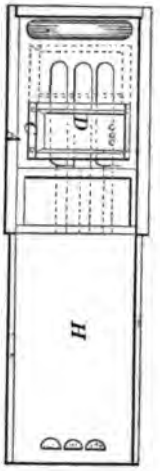

35329

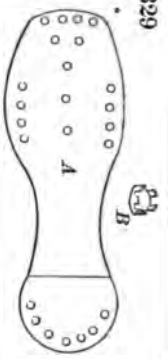

35331

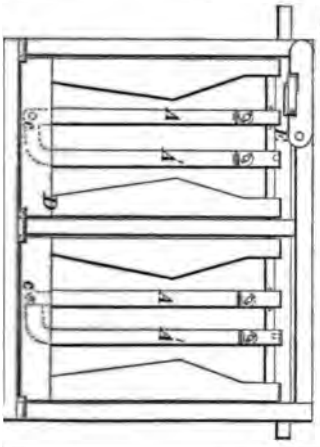

35332

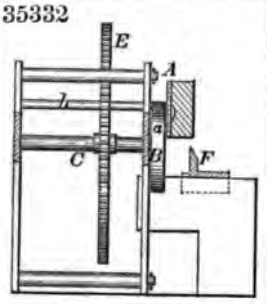

35330

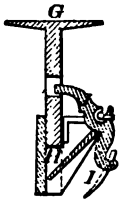

35333

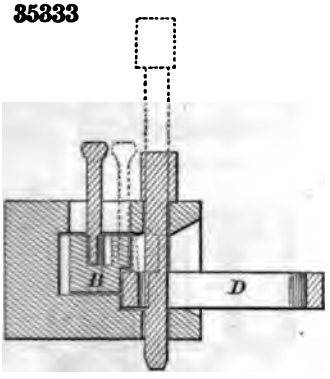

35334

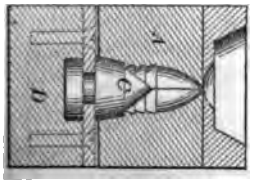

35335

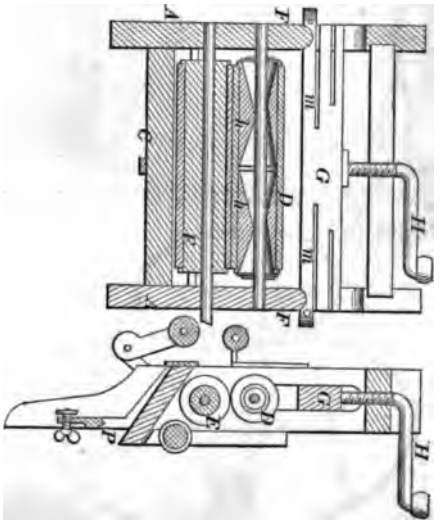

35336

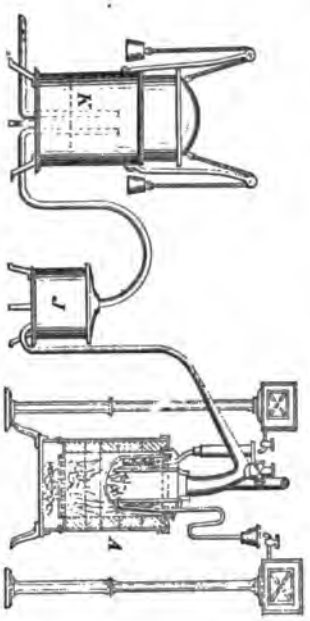

35338

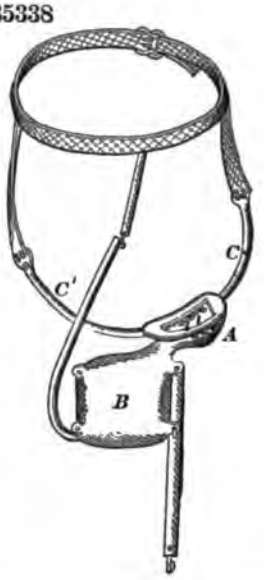

35340

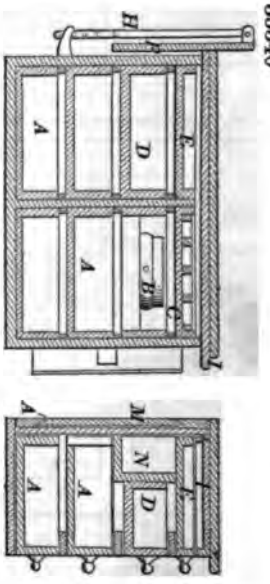

35337

35339

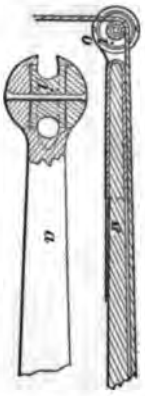

35341

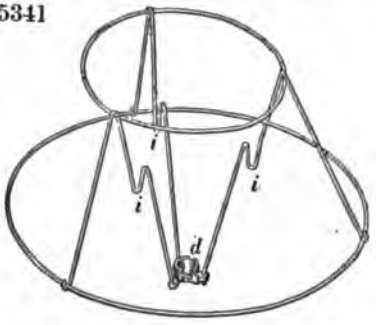

35342

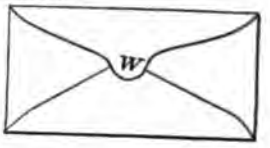

35343

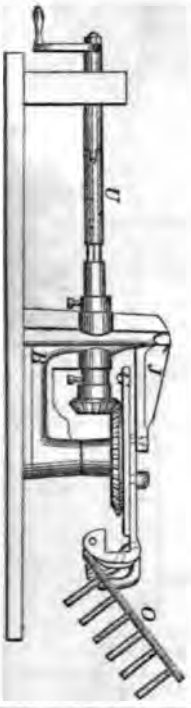

35344

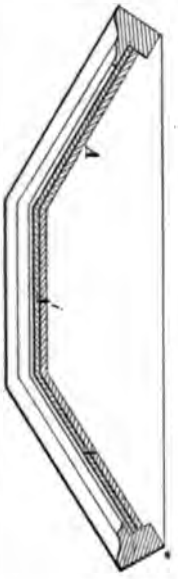

35345

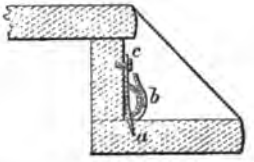

35347

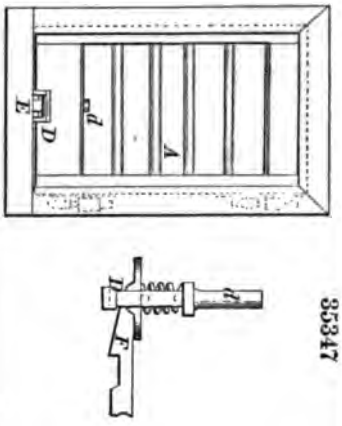

35348

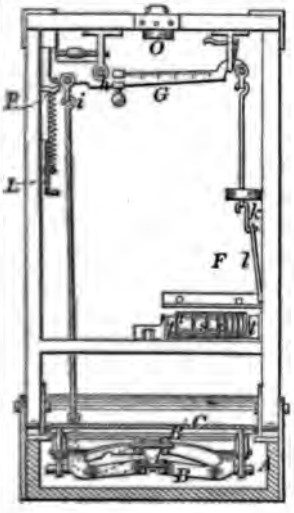

35350

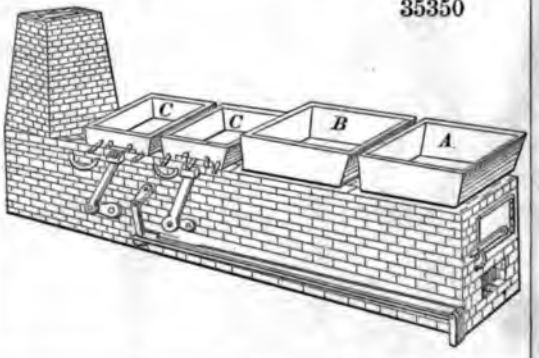

35349

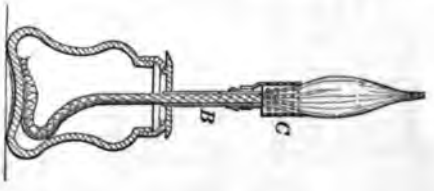

35351

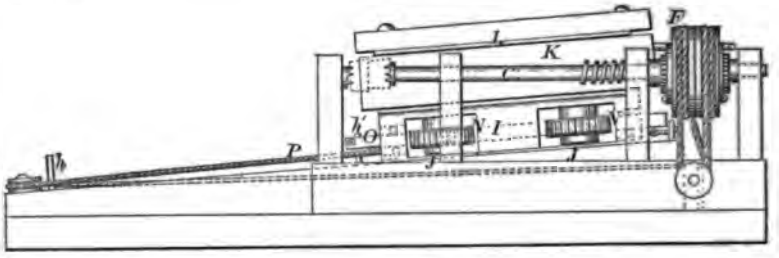

35353

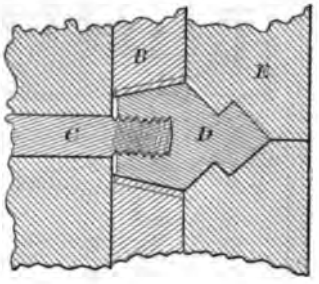

35352

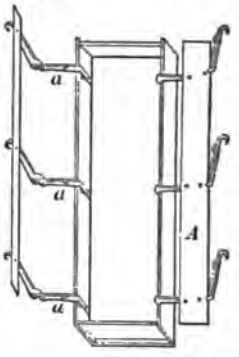

35354

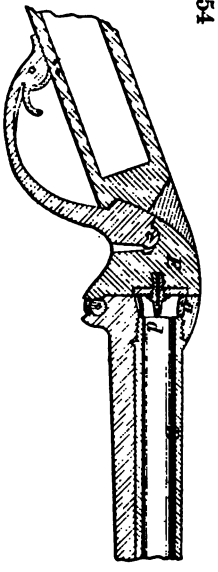

35355

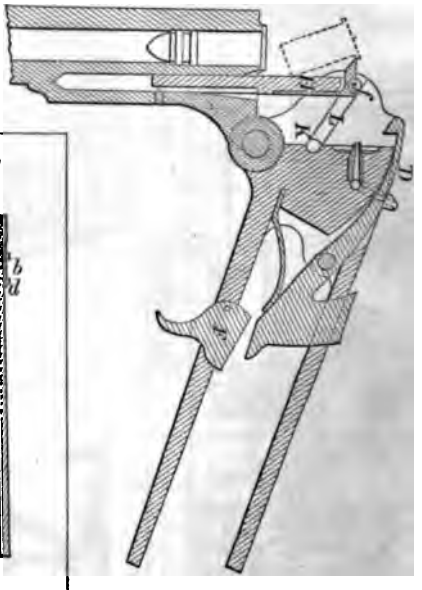

35357

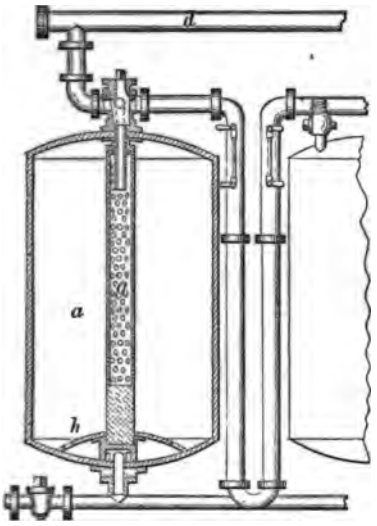

35359

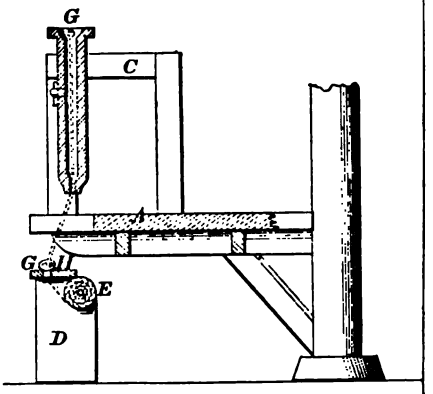

35358

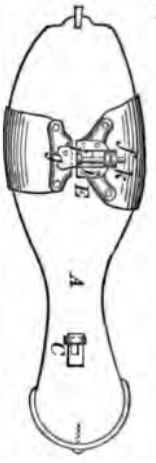

35360

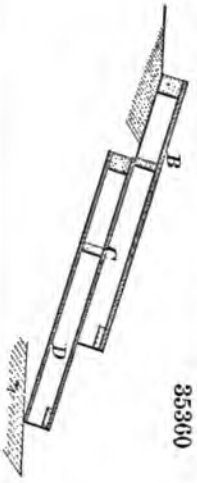

35361

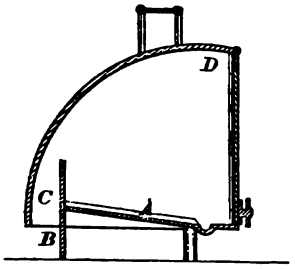

35363

35364

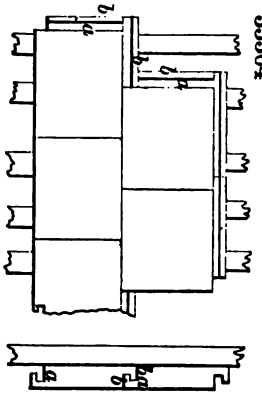

35362

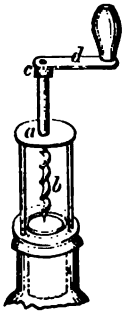

35365

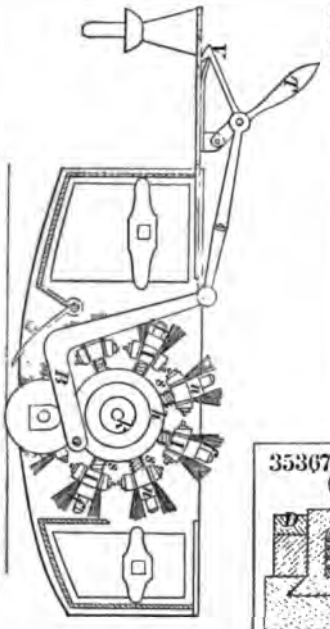

35366

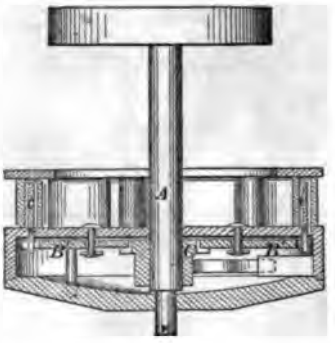

35367

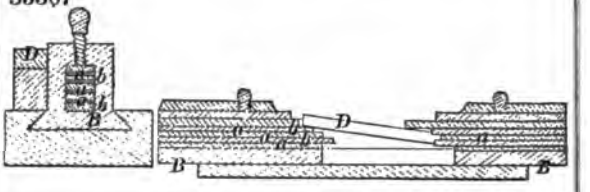

35369

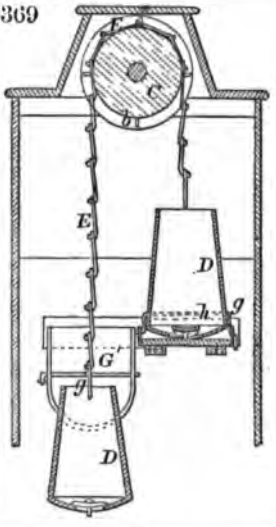

35370

35368

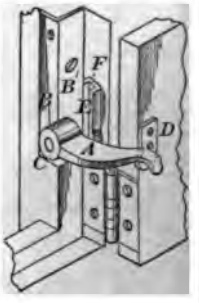

35371

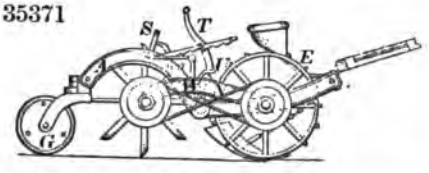

35373

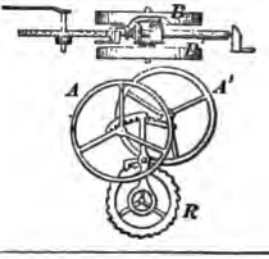

35374

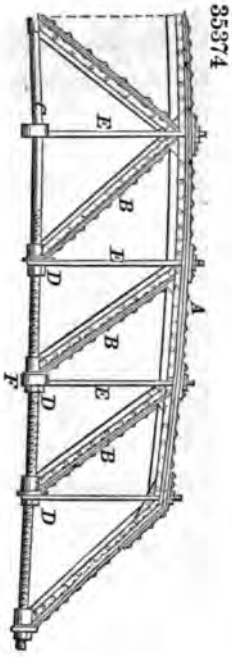

35375

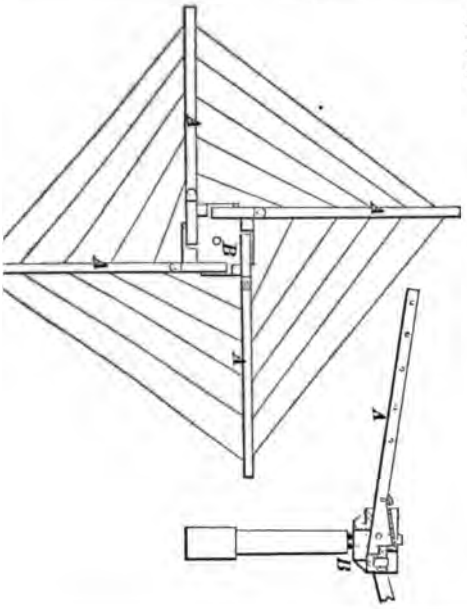

35376

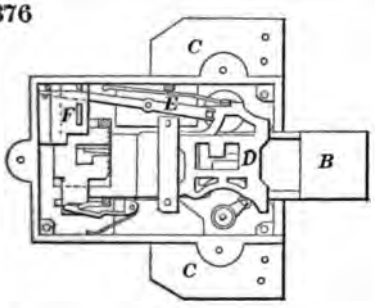

35377

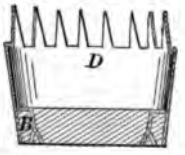

35378

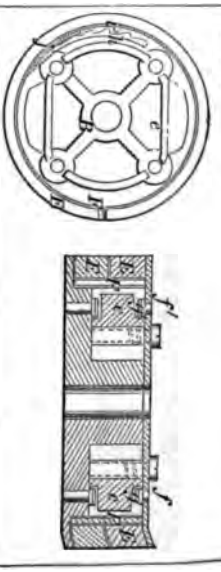

35379

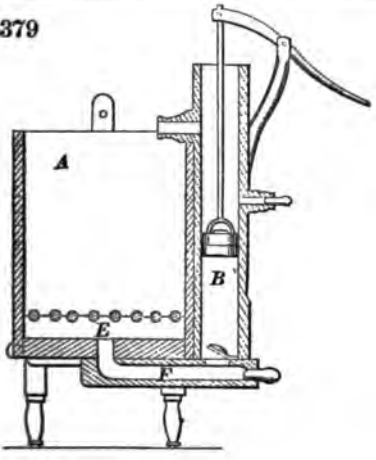

35380

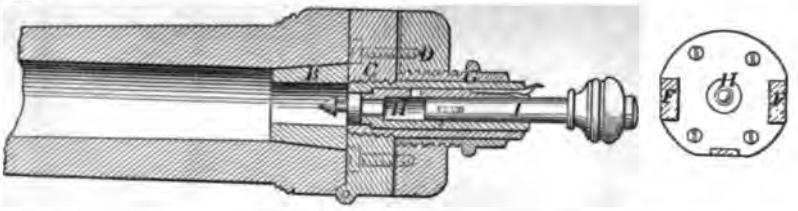

35382

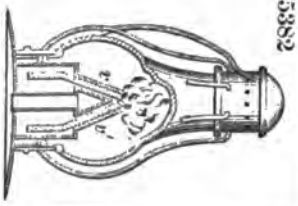

35381

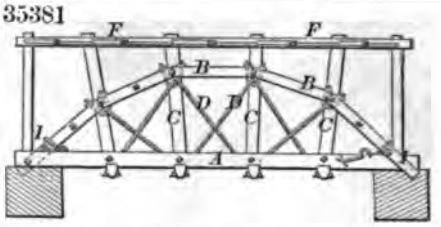

35384

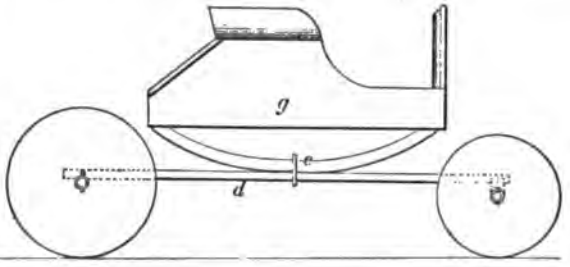

35383

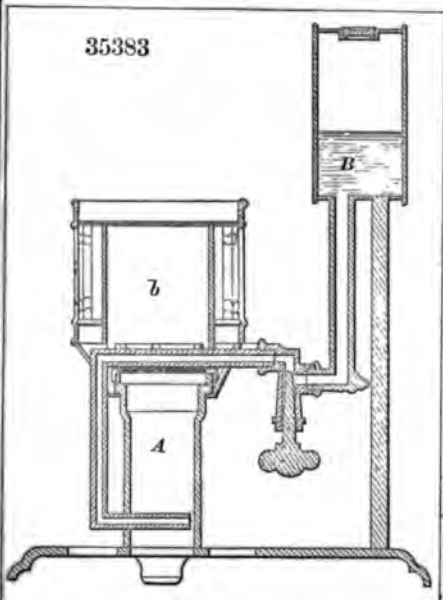

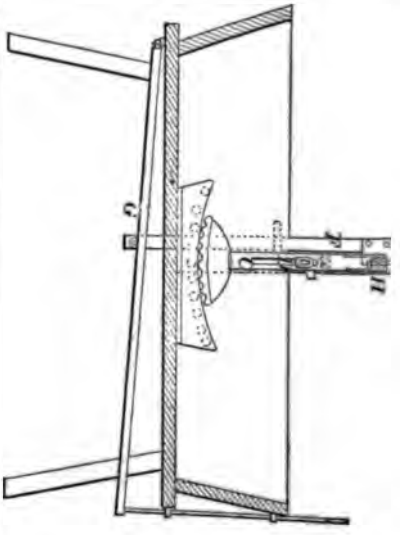

35386

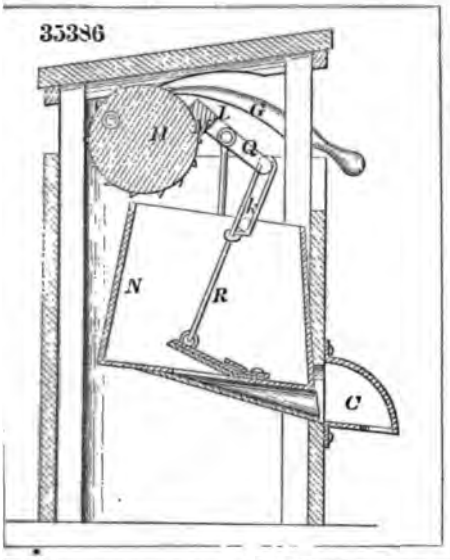

35387

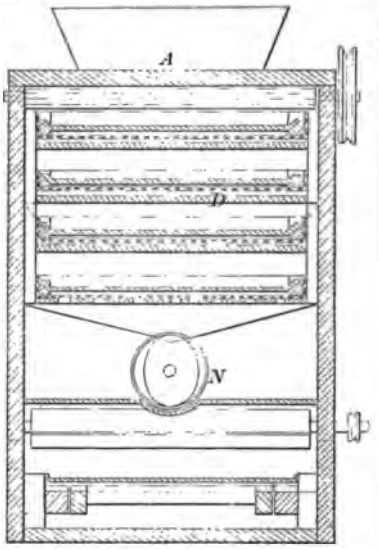

35388

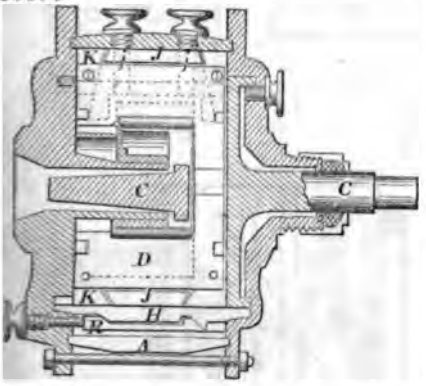

35390

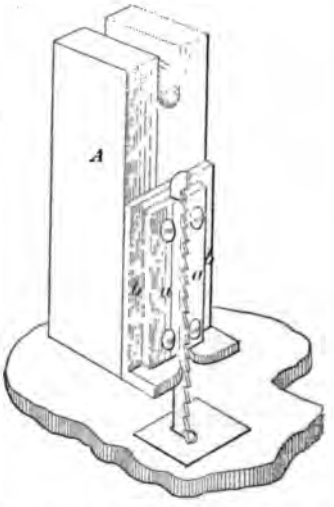

35389

35391

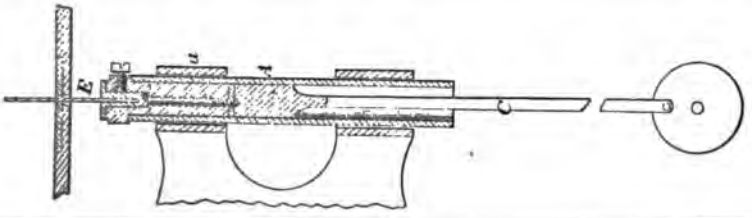

35392

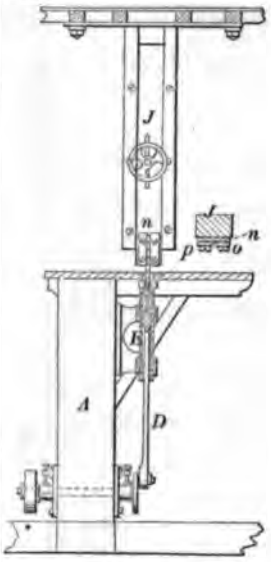

35394

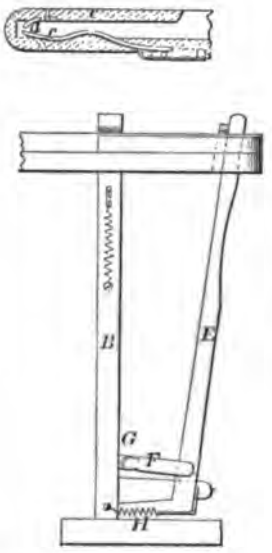

35393

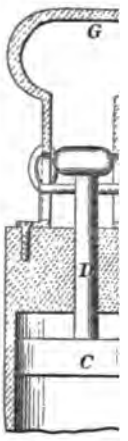

35395

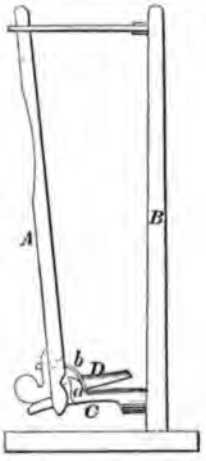

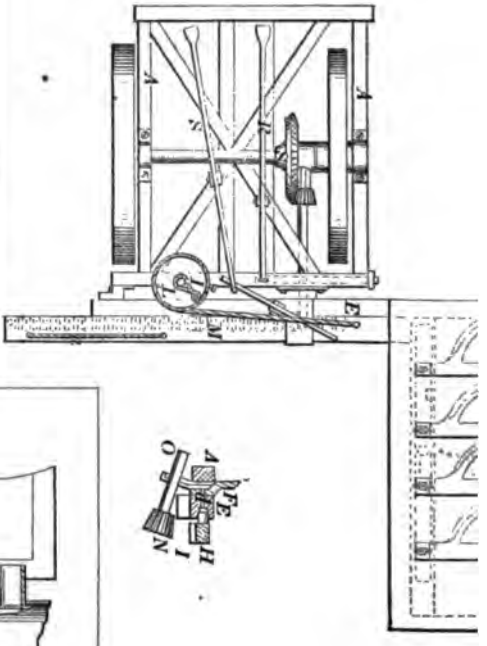

35396

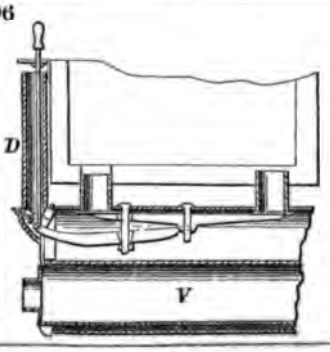

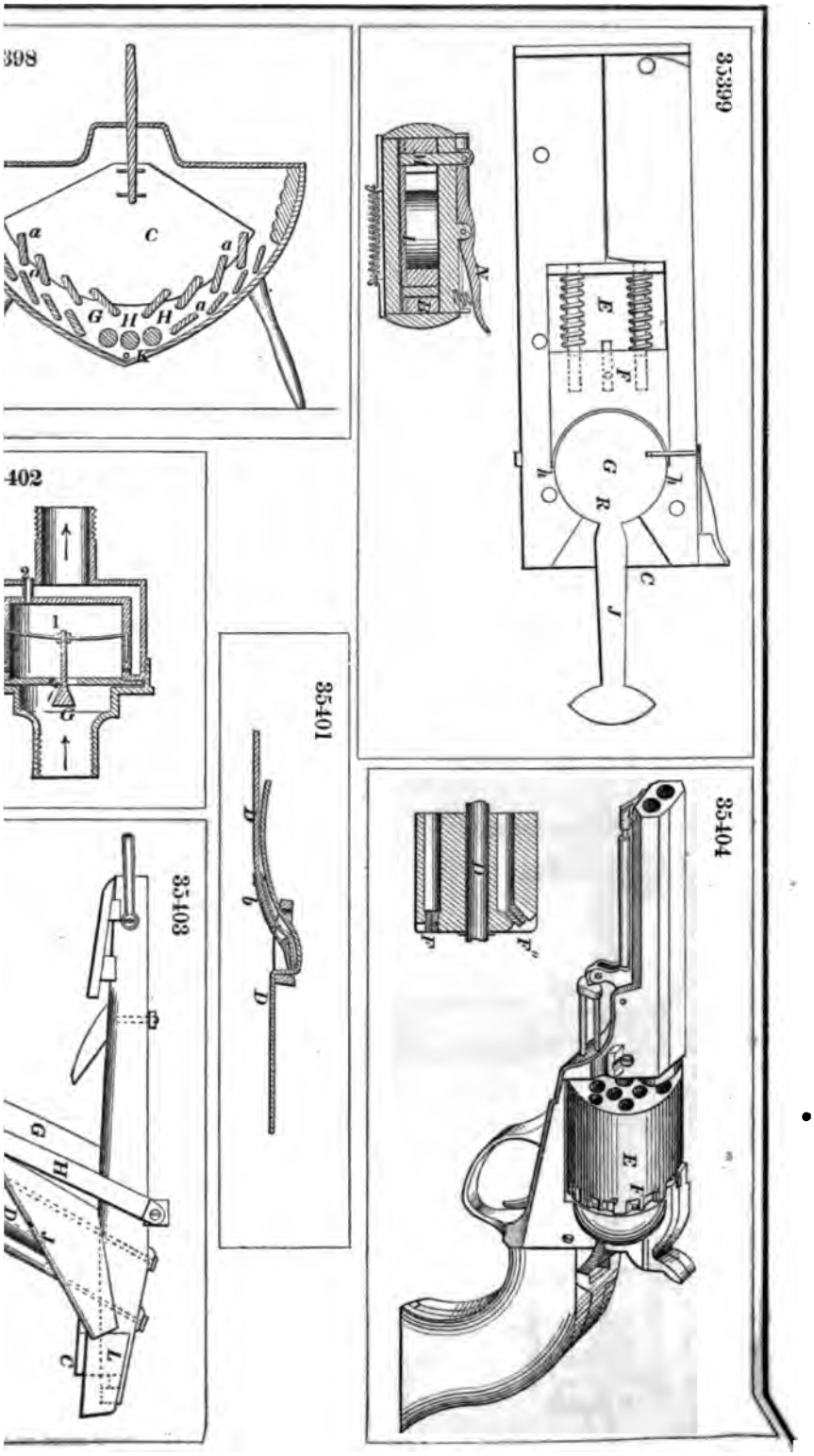
35399
35404
35401
35403
402
398

35406

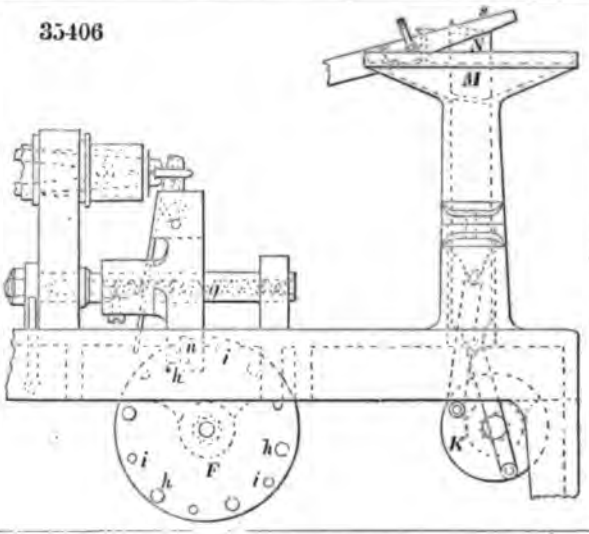

35405

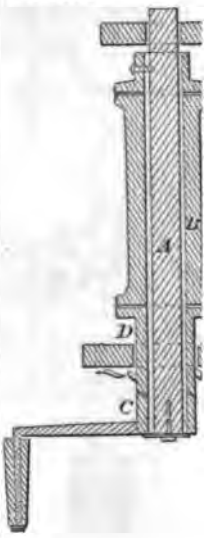

33408

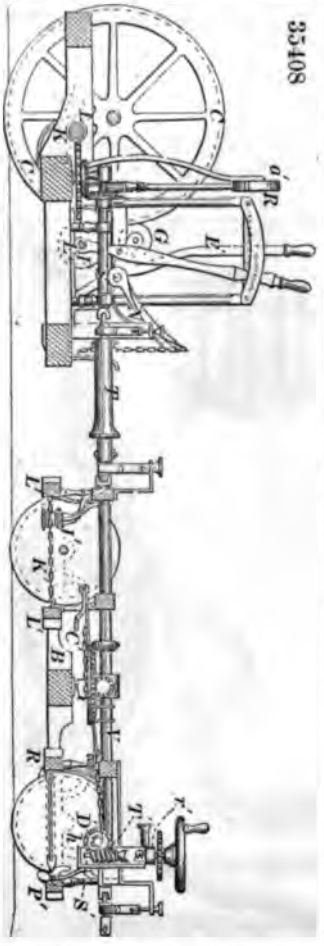

35407

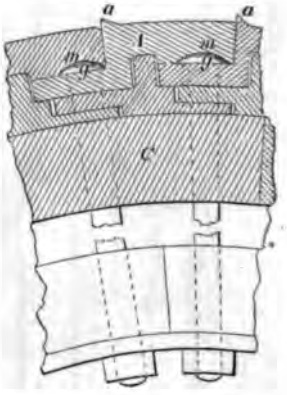

35410

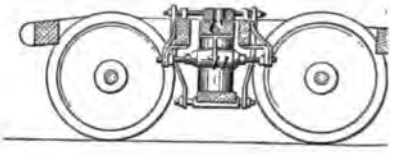

411

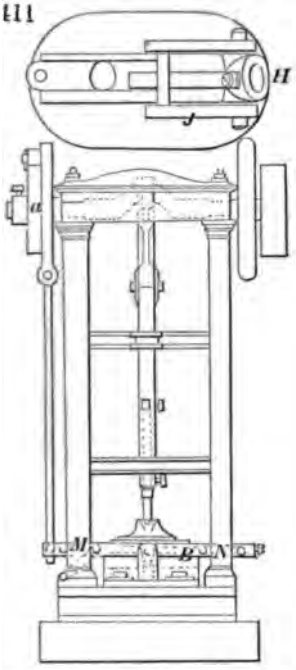

35412

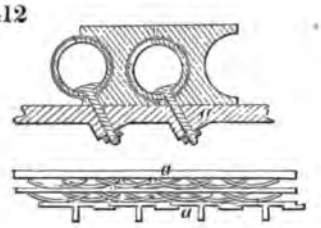

35413

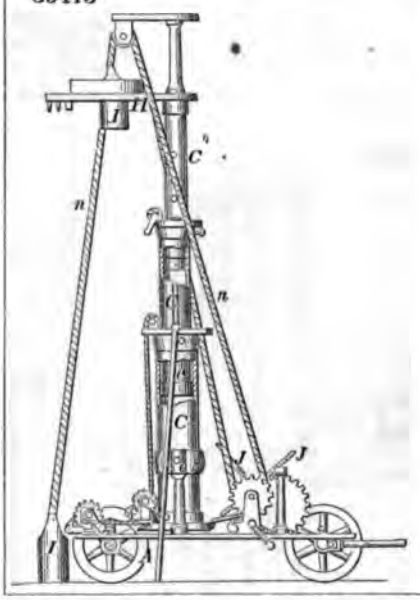

35414

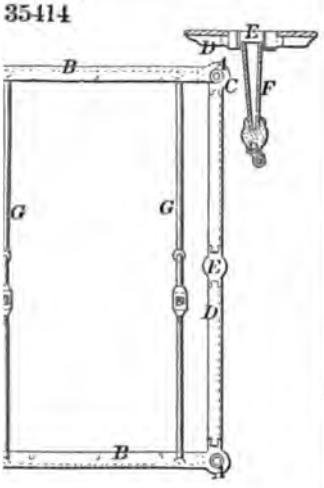

35416

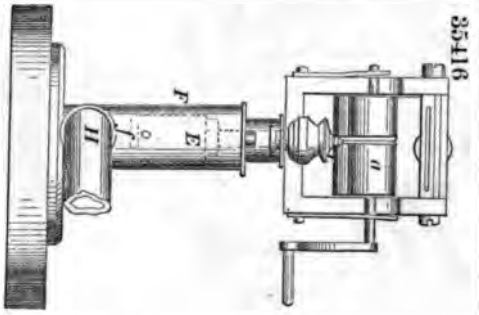

35415

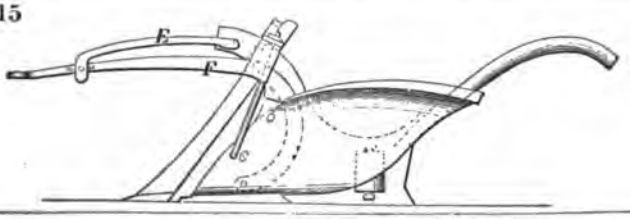

35419

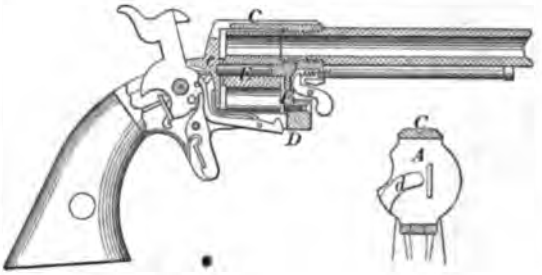

35418

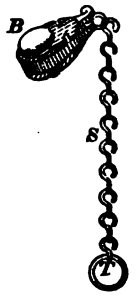

35420

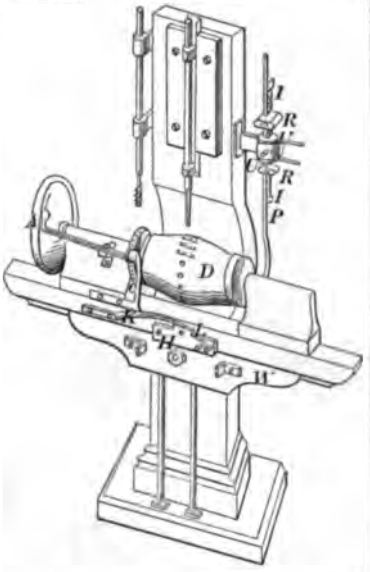

35421

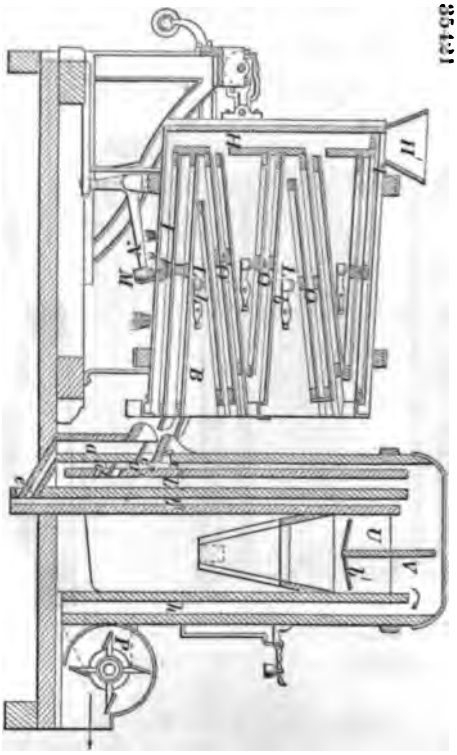

35422

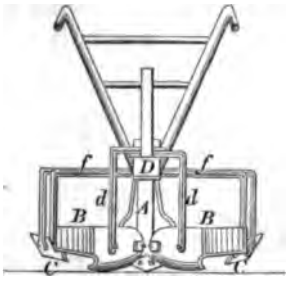

35423

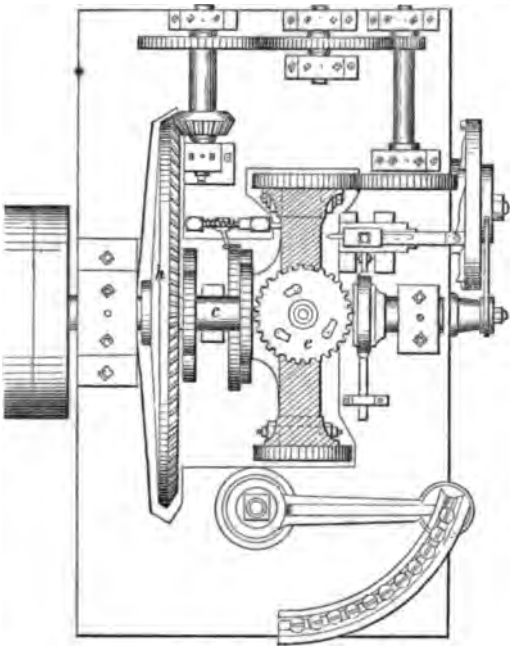

35424

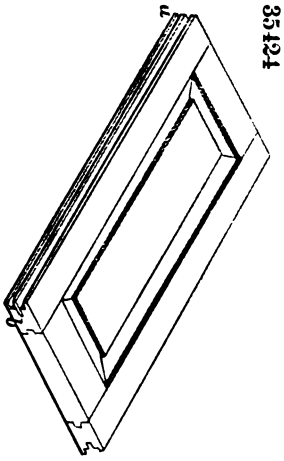

35426

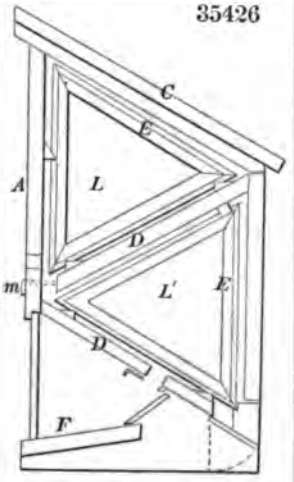

35425

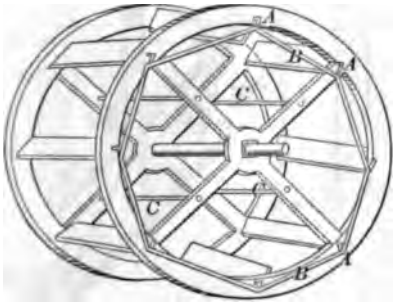

35429

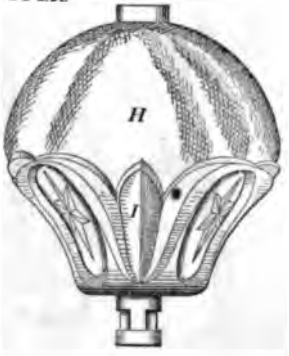

35428

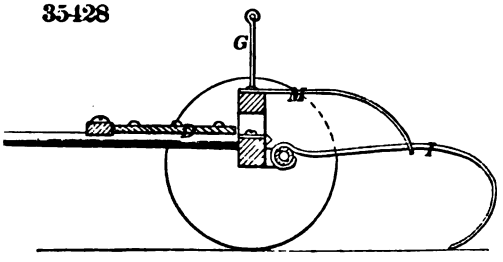

35430

35431

35432

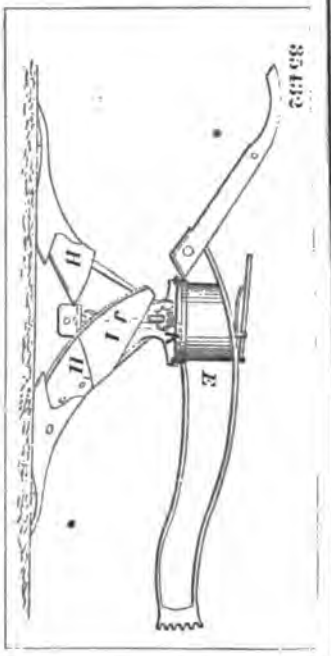

35433

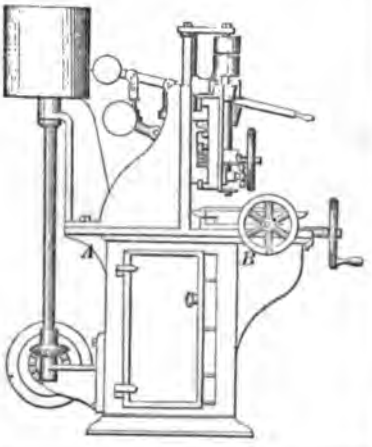

35434

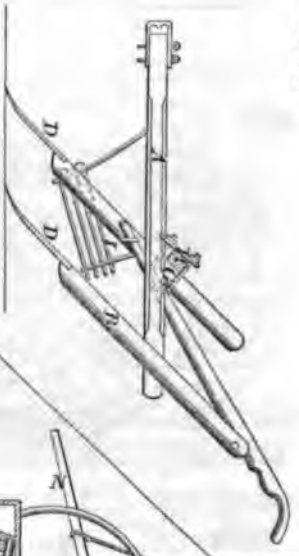

35435

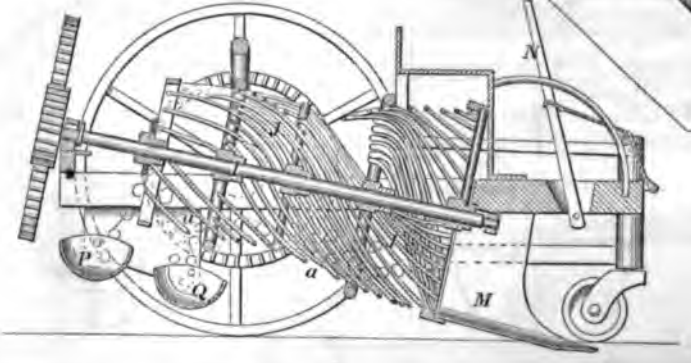

5436

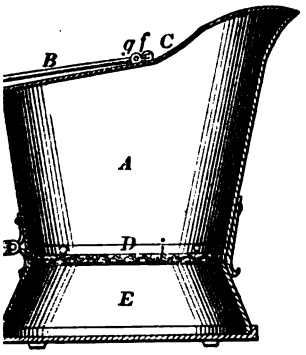

35437

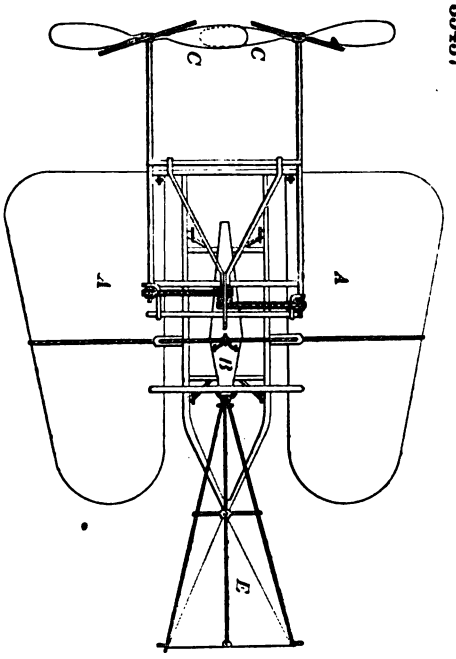

5438

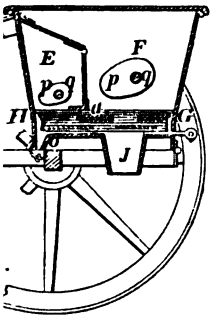

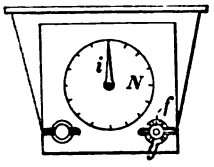

35439

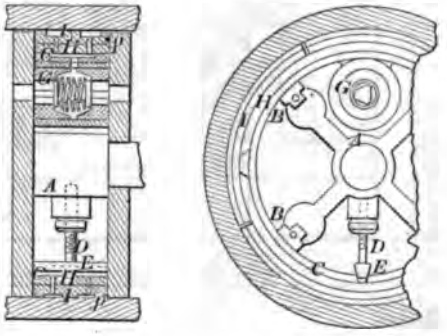

441

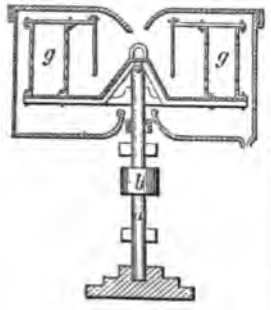

35440

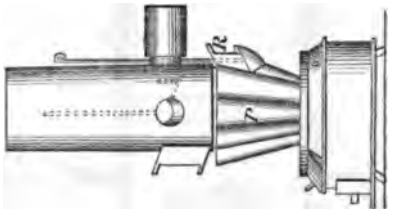

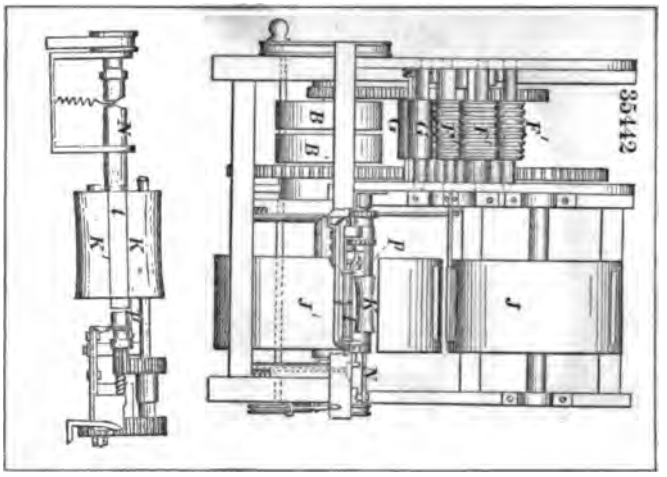
35442

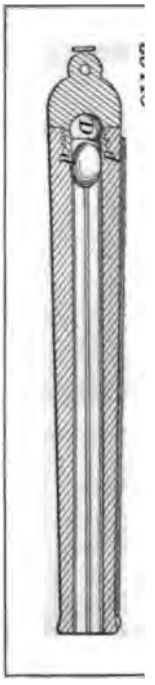

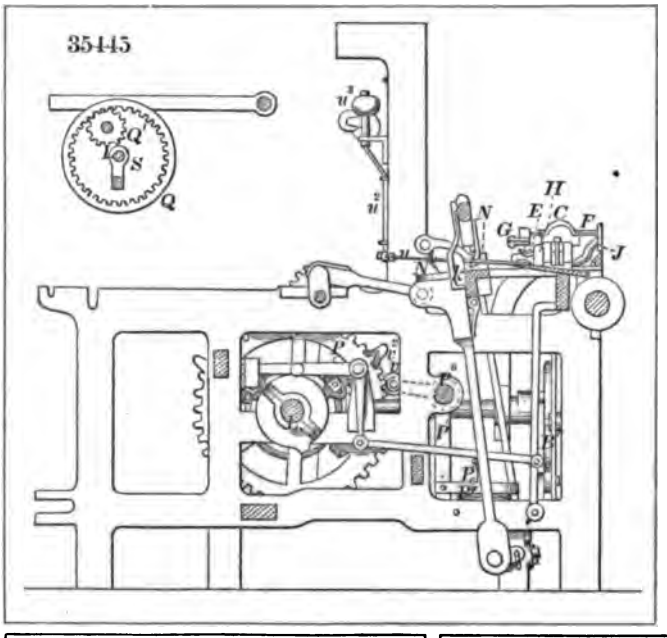
35445
Q
Q
H
N
E
C
G
F
J

3544
B

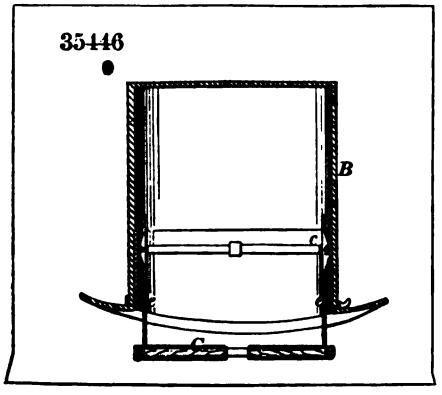
35446
B
C
C

35448
C
A

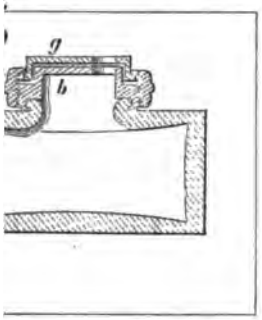

35450

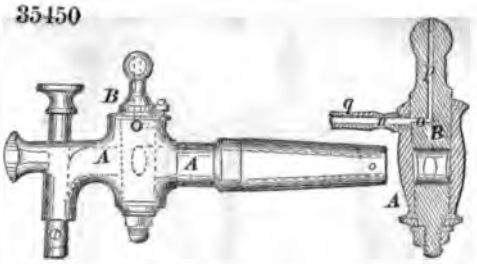

35453

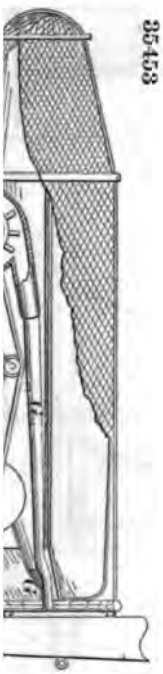

35454

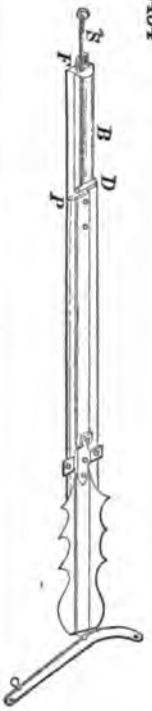

35452

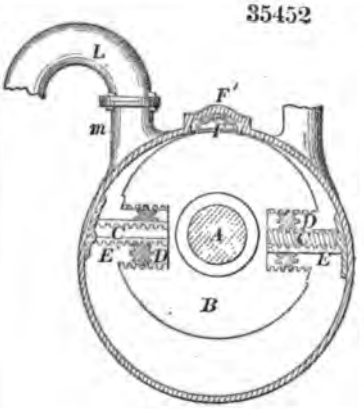

35451

456

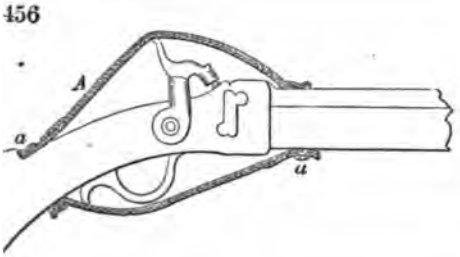

35455

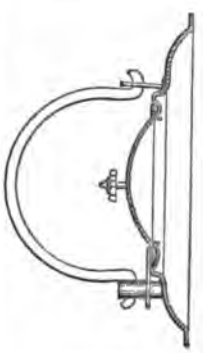

35442

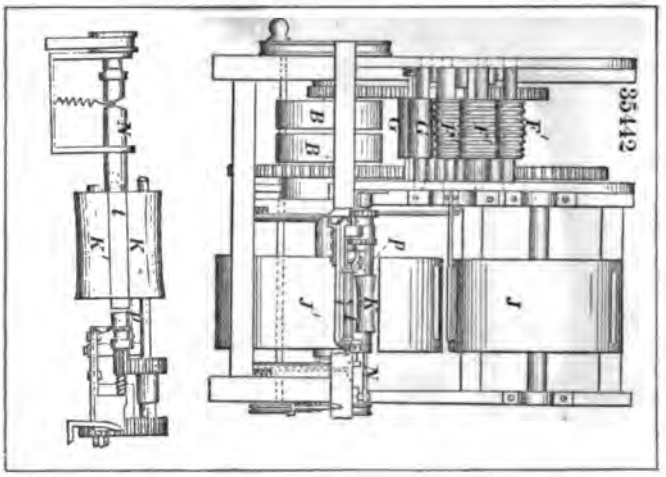

35443

35445

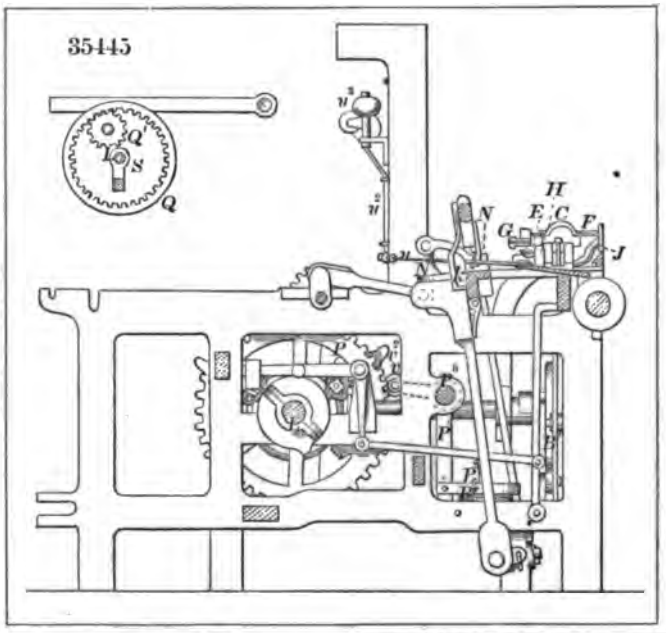

35447

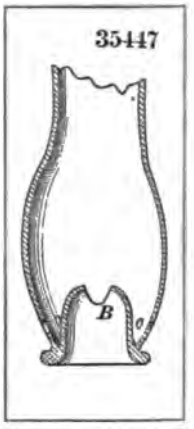

35446

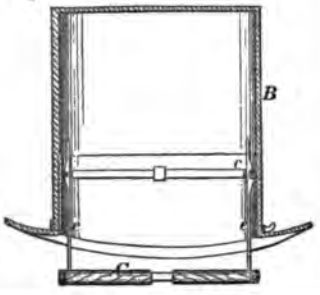

35448

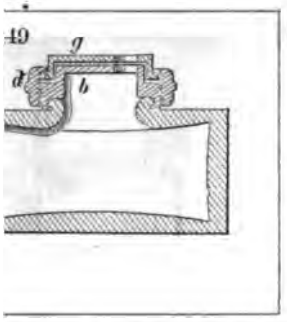
49
g
d
b

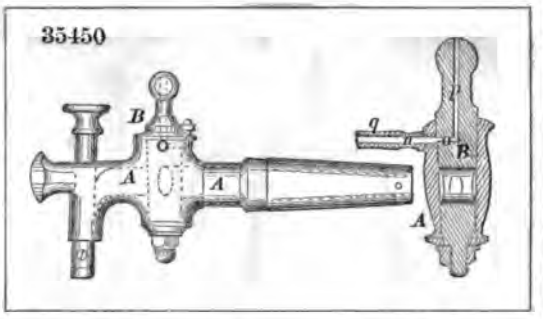
35450
B
A
A
q
p
B
A

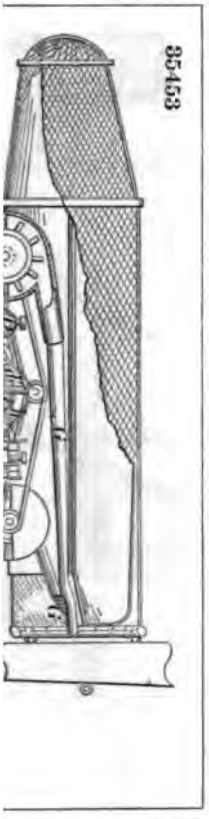
35453

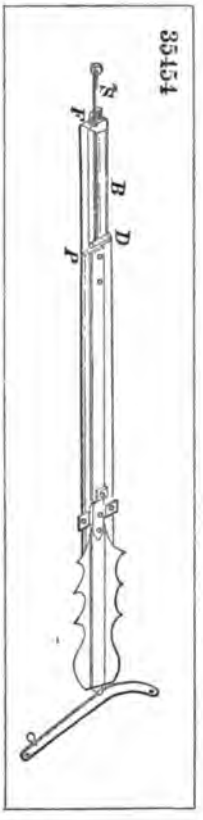
35454
S
F
B
D
P

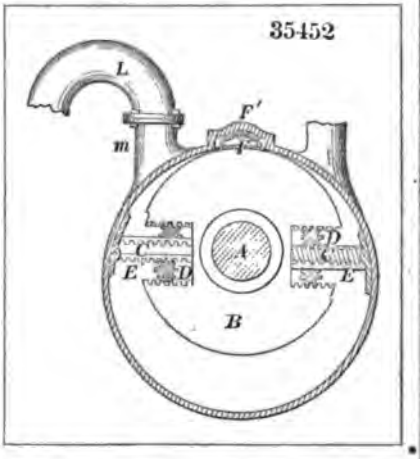
35452
L
F'
m
A
E
D
D
E
B

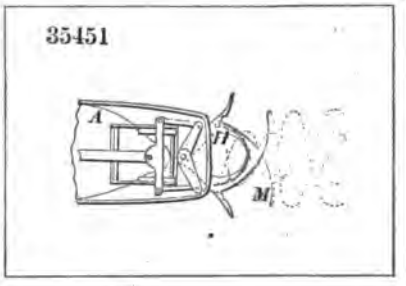
35451
A
H
M

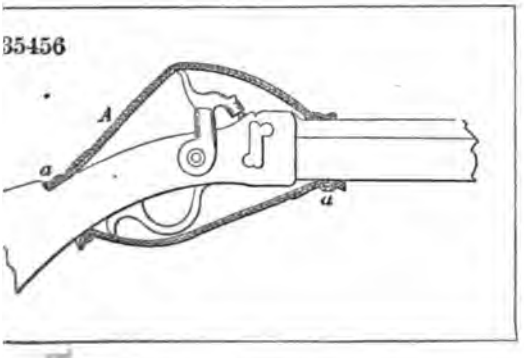
35456
A
a
a

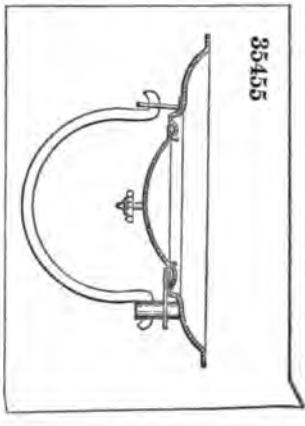
35455

35457

35460

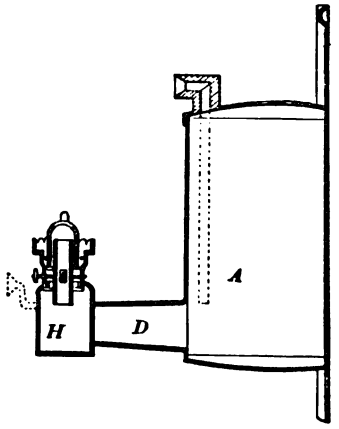

35458

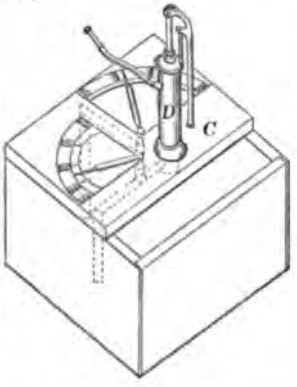

35461

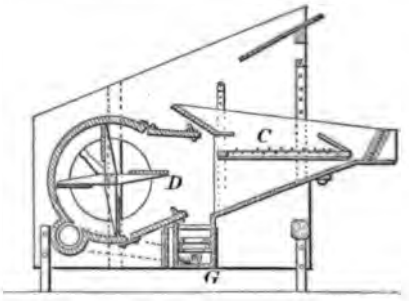

35459

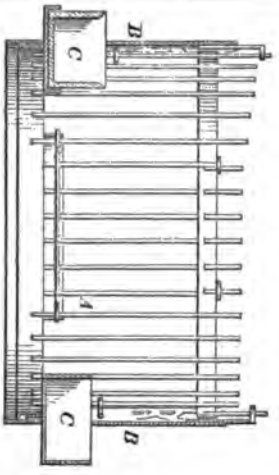

35462

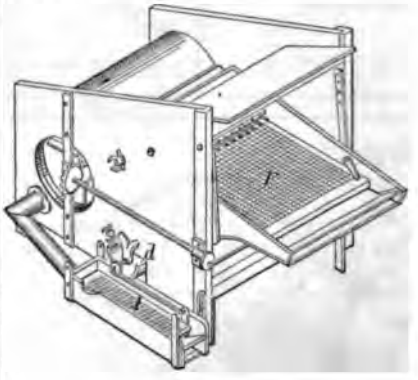

35463

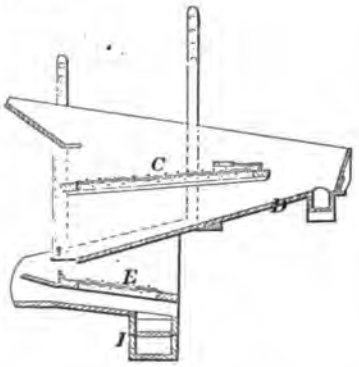

35465

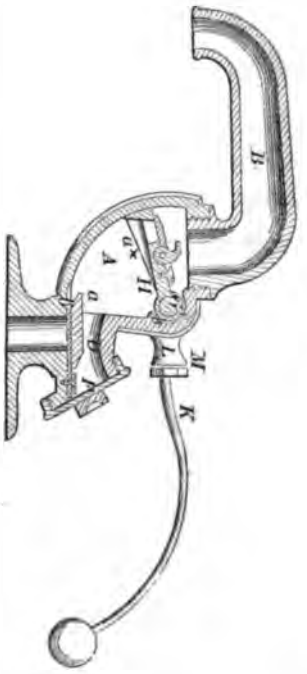

35466

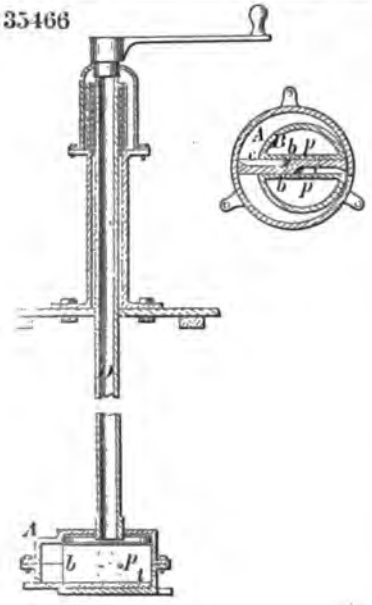

35467

35468

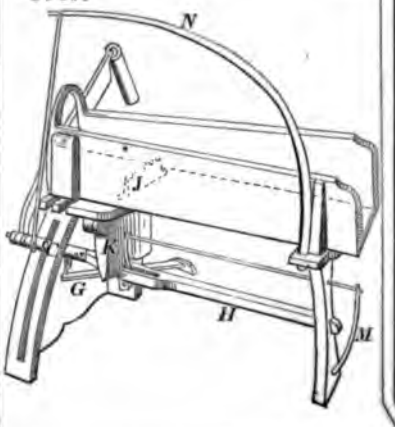

35470

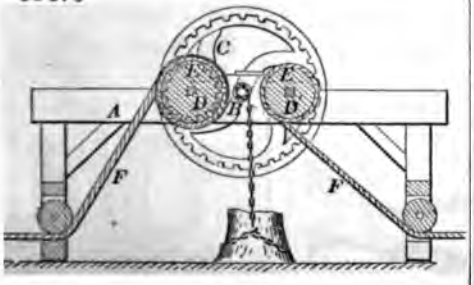

35469

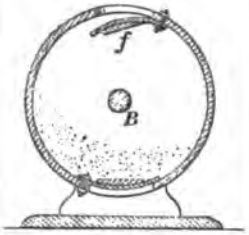

35471

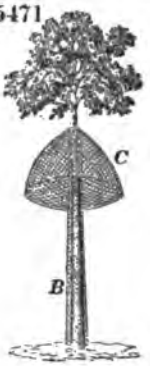

35472

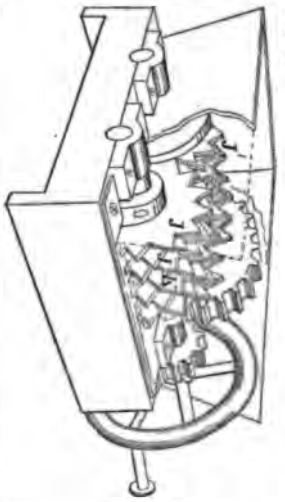

35473

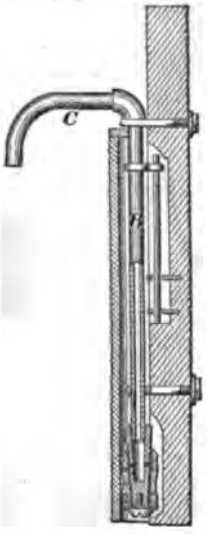

35475

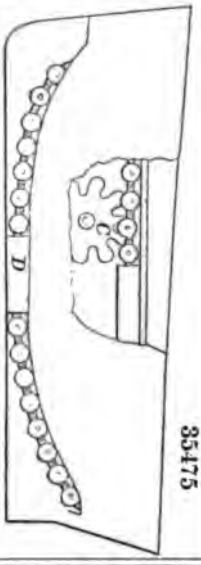

35474

35476

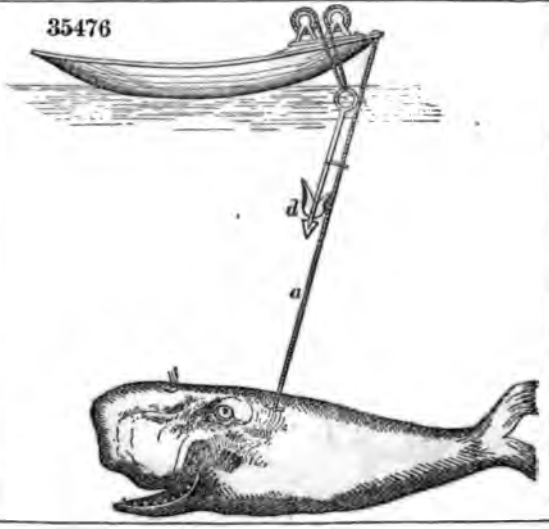

35478

35479

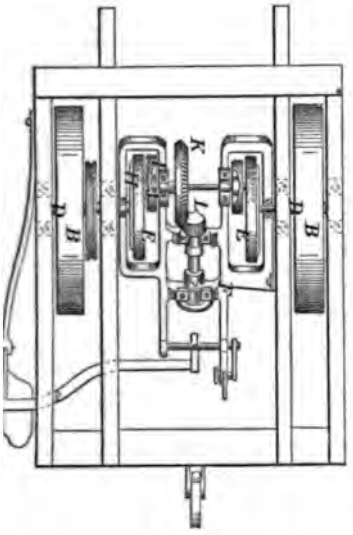

35480

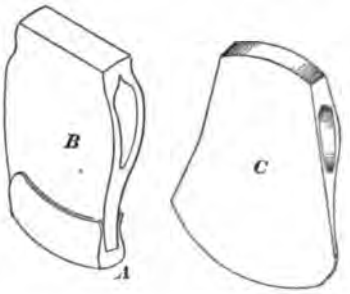

35481

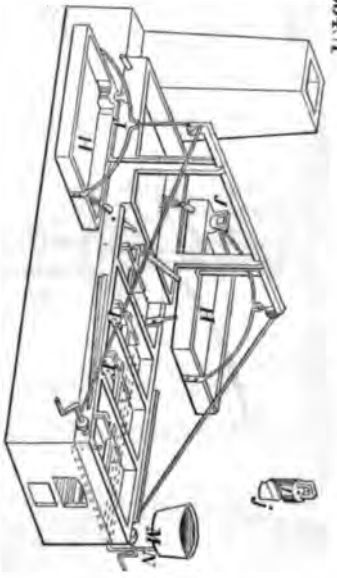

35482

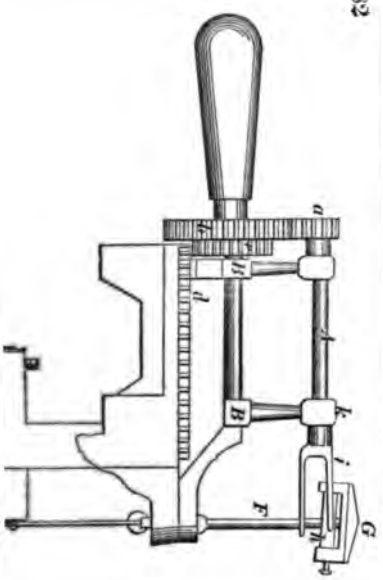

35483

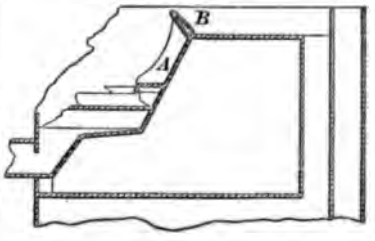

35484

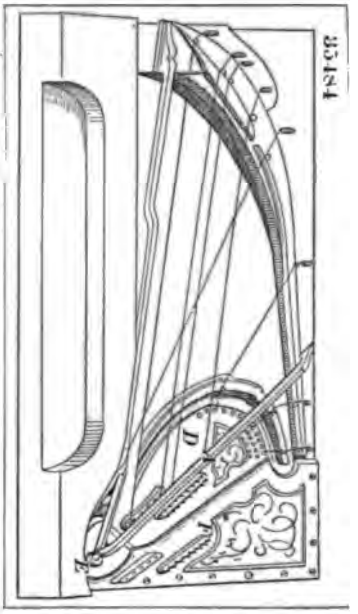

35485

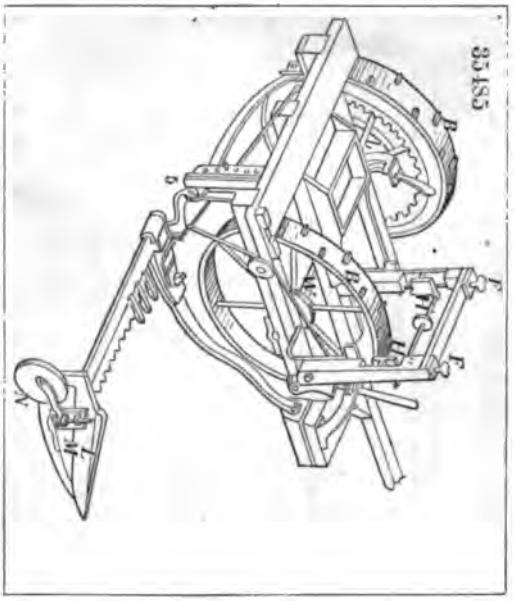

35486

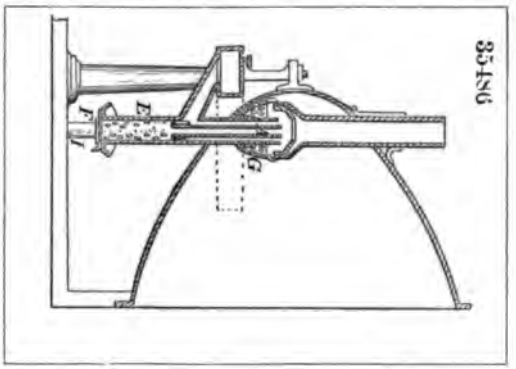

35487

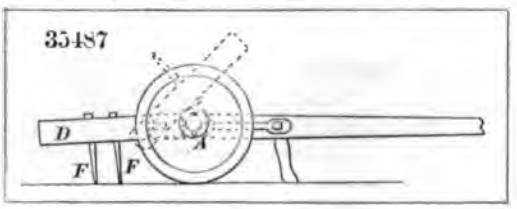

35488

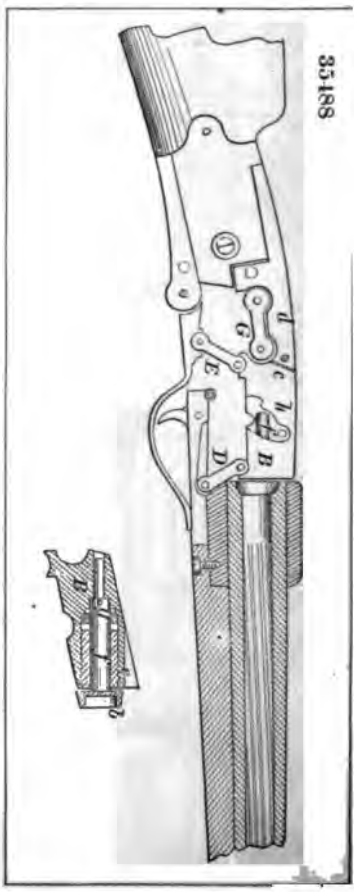

35489

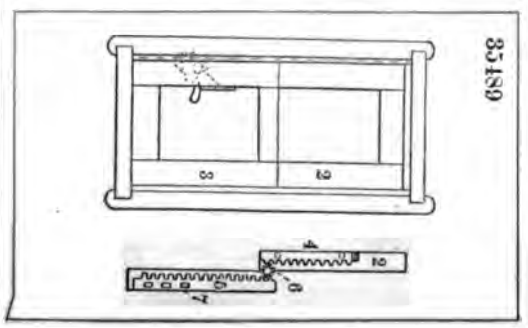

490

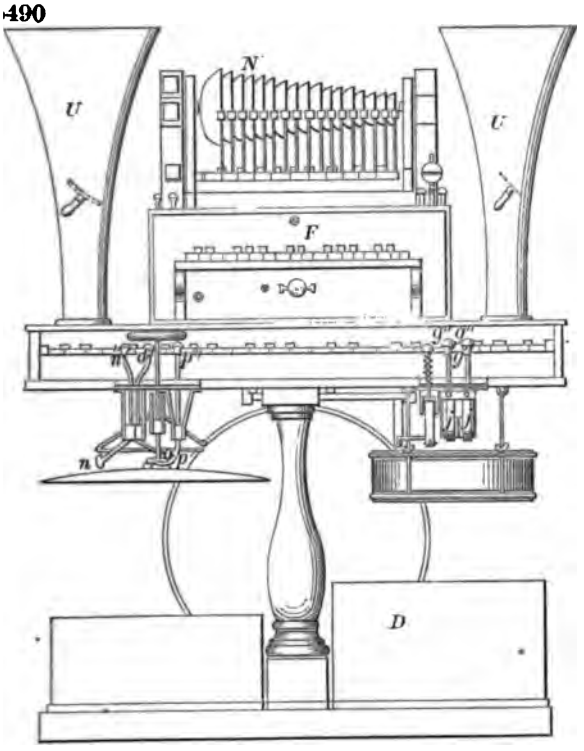

35491

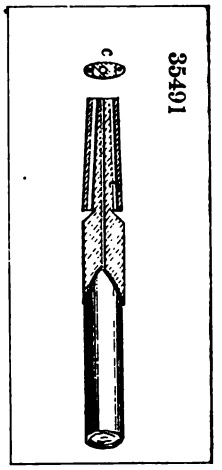

35493

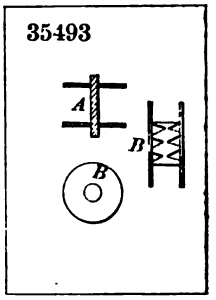

35492

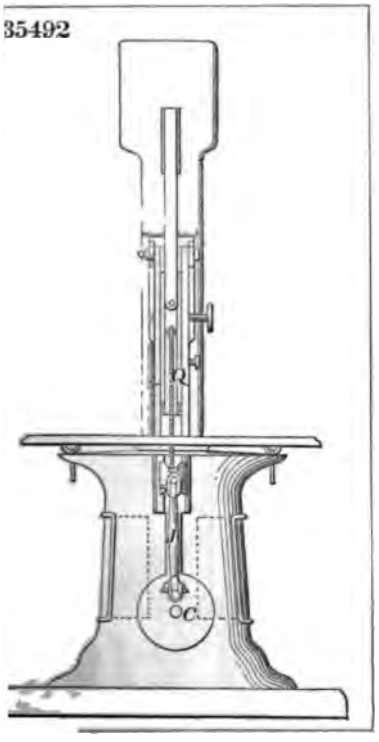

35494

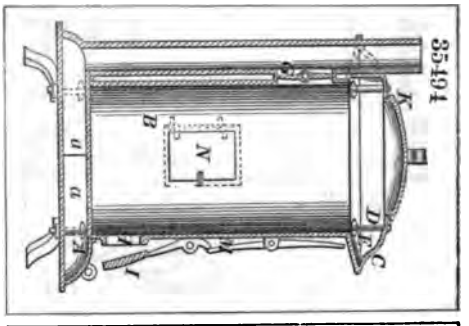

35495

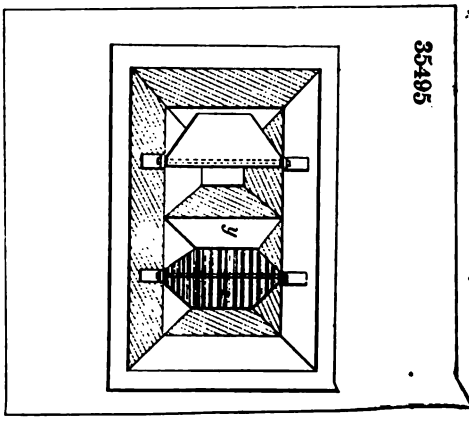

35496

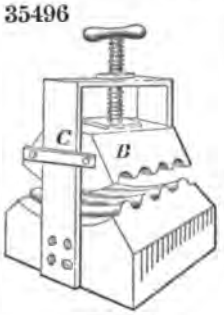

35497

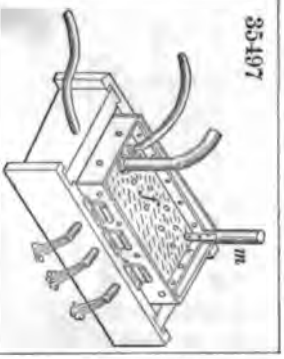

35498

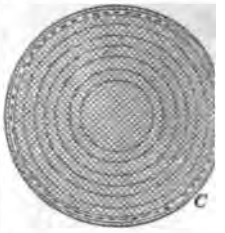

35499

35500

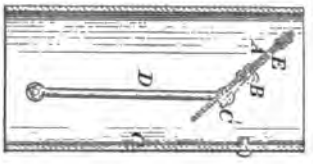

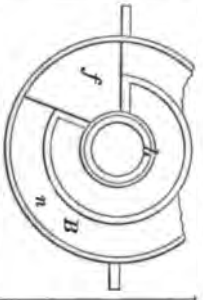

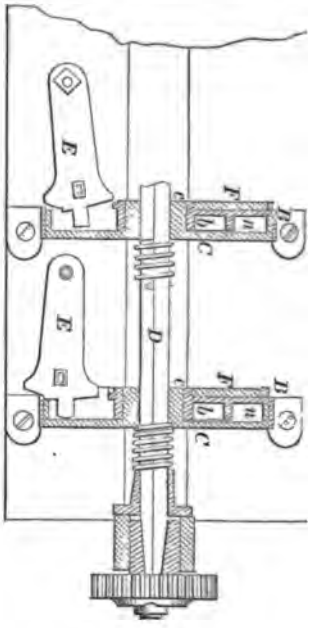

35503

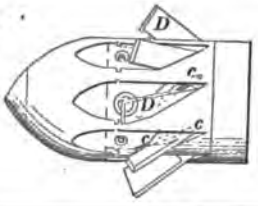

35502

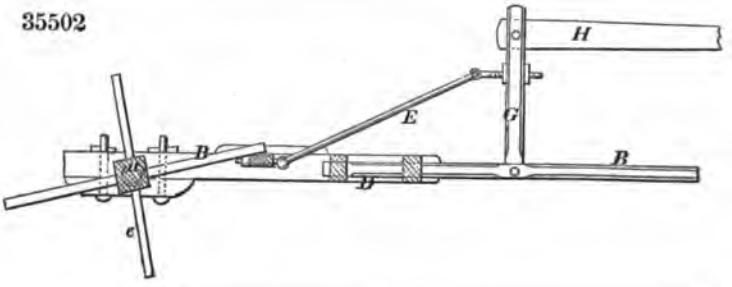

35504

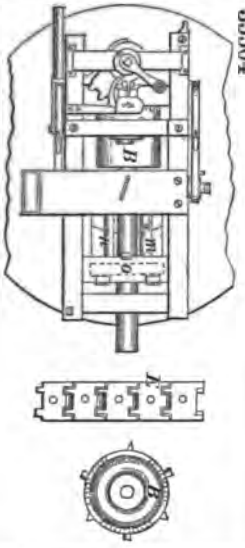

35505

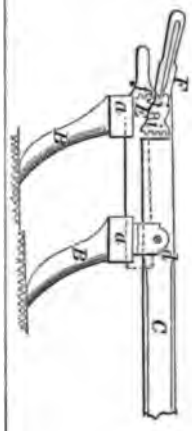

35506

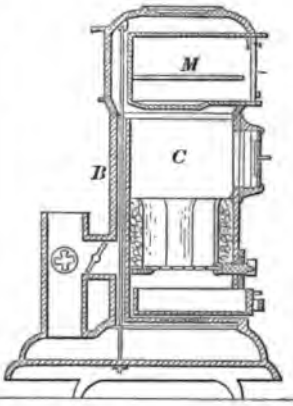

35508

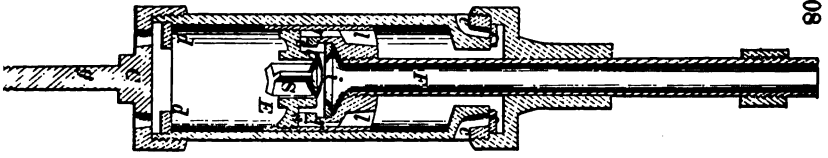

35507

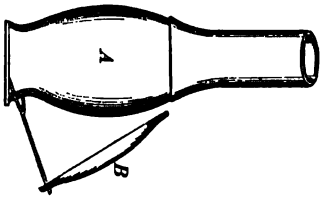

35510

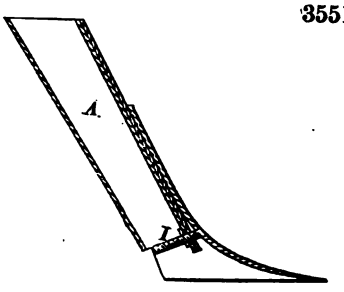

35511

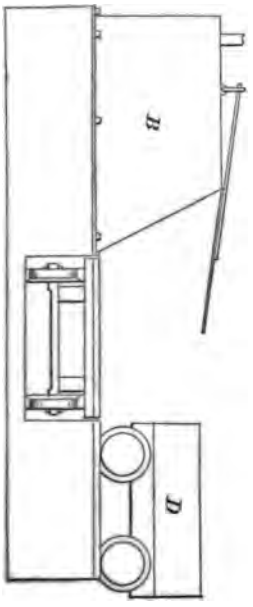

35512

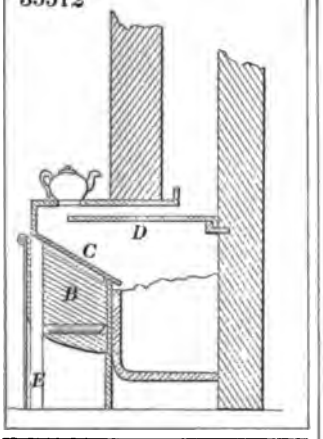

35513

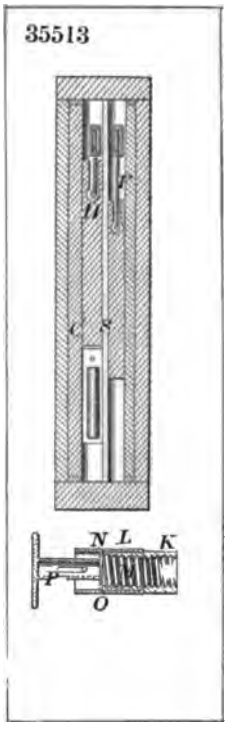

35517

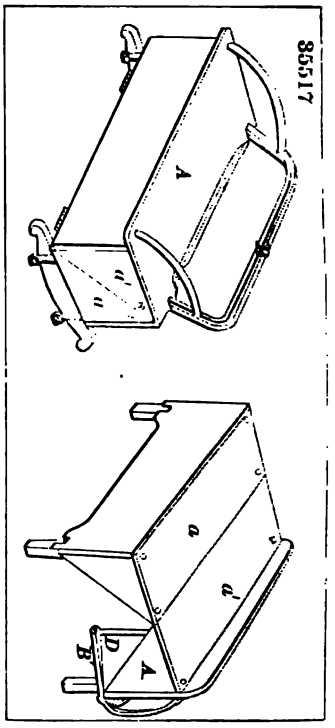

35516

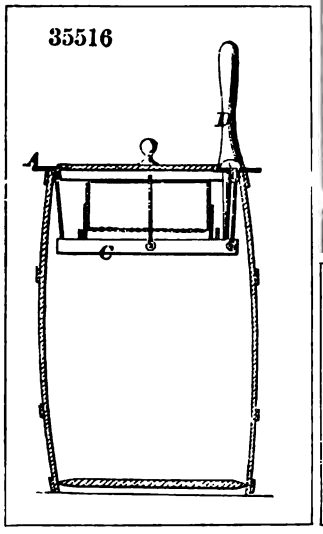

35514

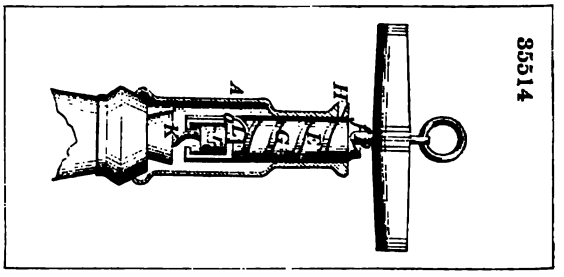

35515

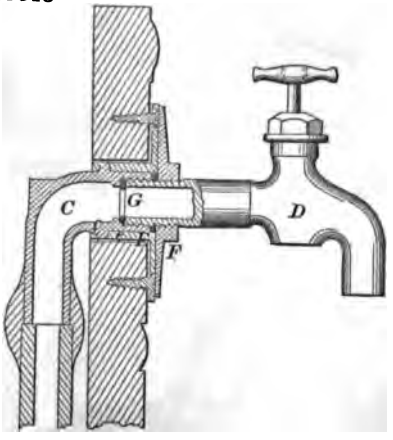

35518

35519

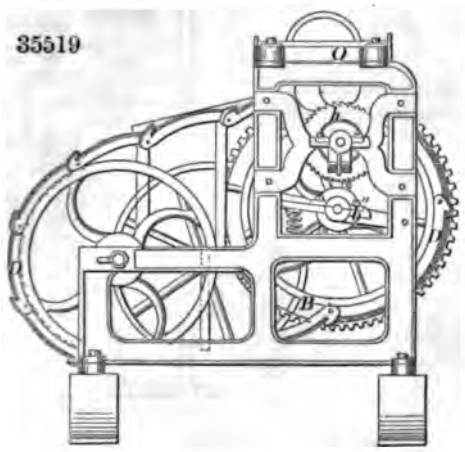

35521

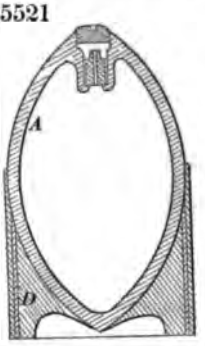

35528

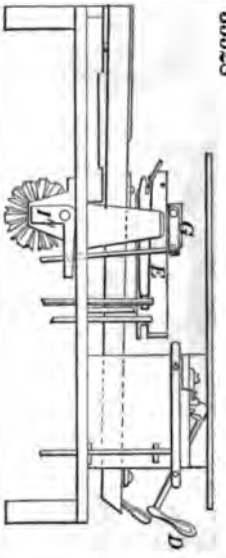

35520

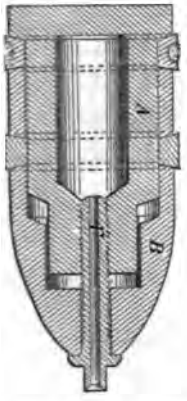

35523

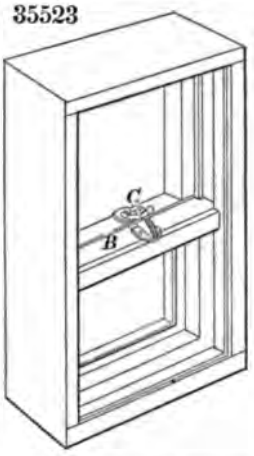

524

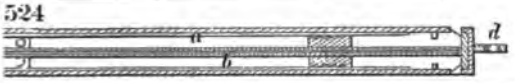

35522

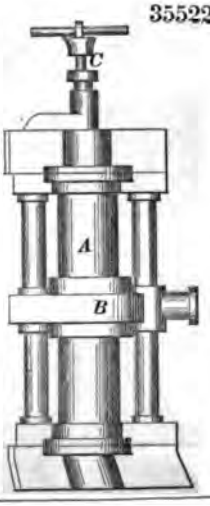

35525

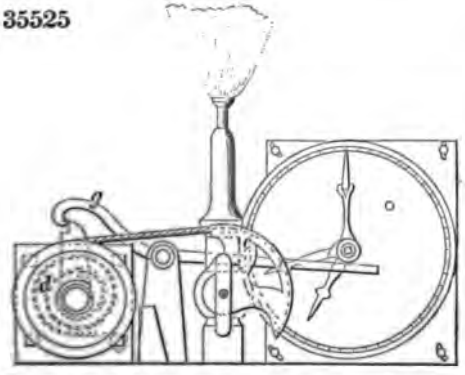

35529

35531

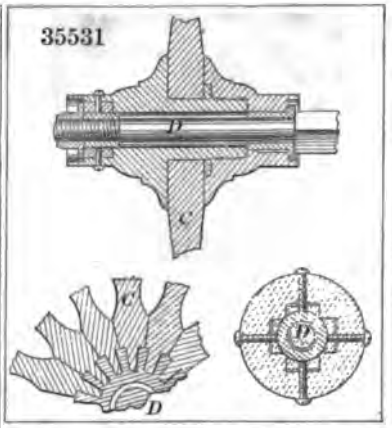

35533

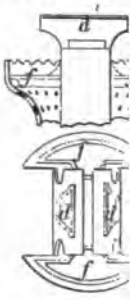

35532

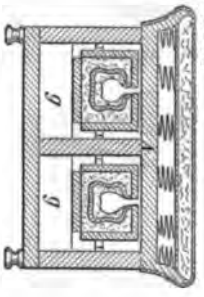

35530

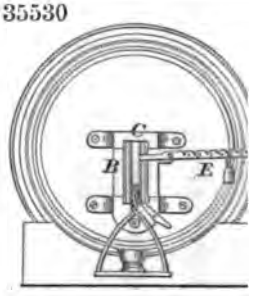

35534

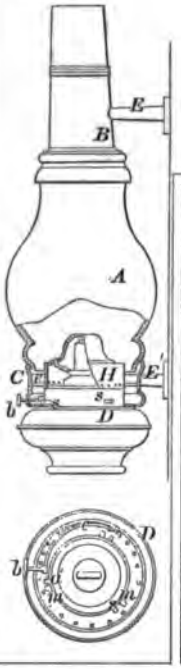

35536

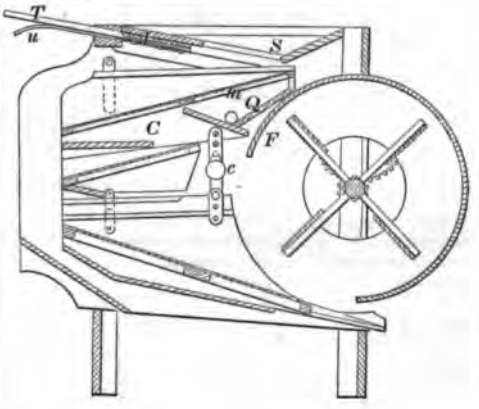

35537

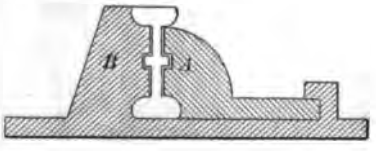

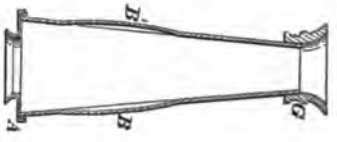

35538

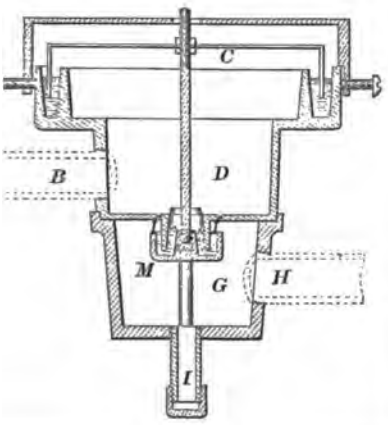

35539

LETTERS from Troy N. Y.

a _____ 186

Wts	Unpaid.			Paid Drs.			PAID HERE. By Stamps.			In Money			Fee
Cts.	No.	Doll	Cts	No.	Doll	Cts	No	Doll	Cts	No	Doll	Cts	No.

b _____ _____ P M.

To Wiesenbach _____ _____
d _____ e _____

35540

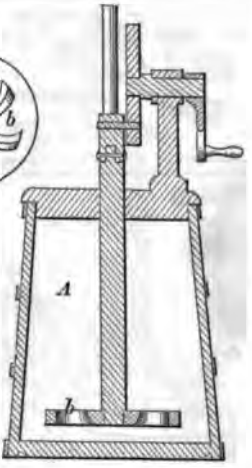

541

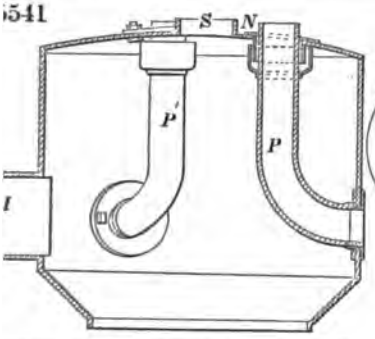

35543

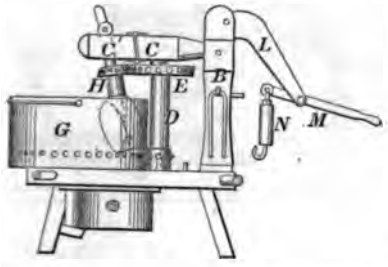

35542

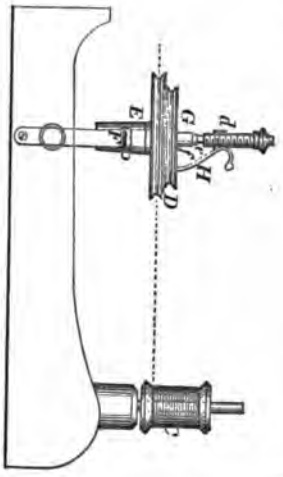

5544

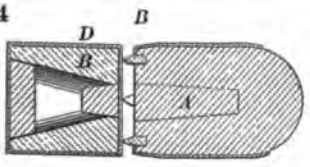

35546

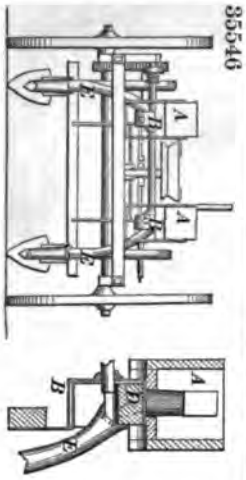

35545

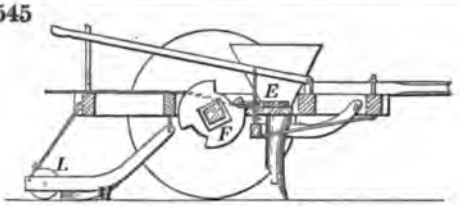

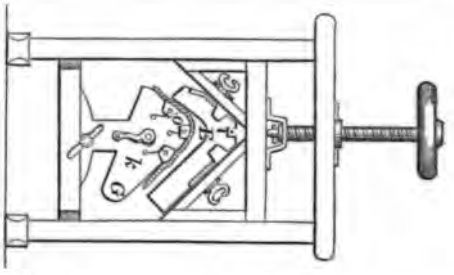

35550

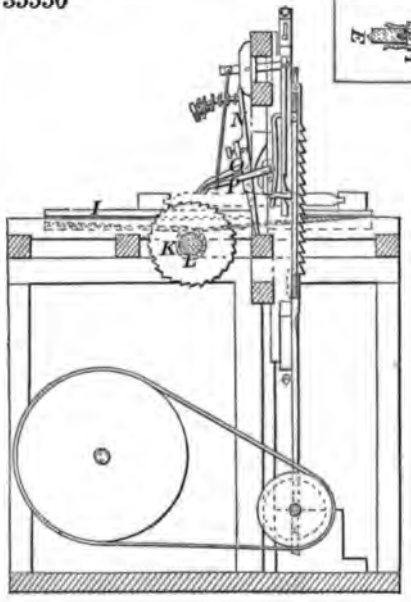

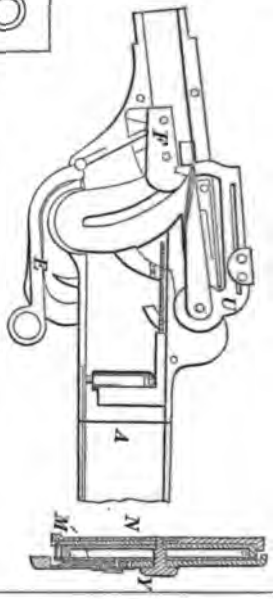

35549

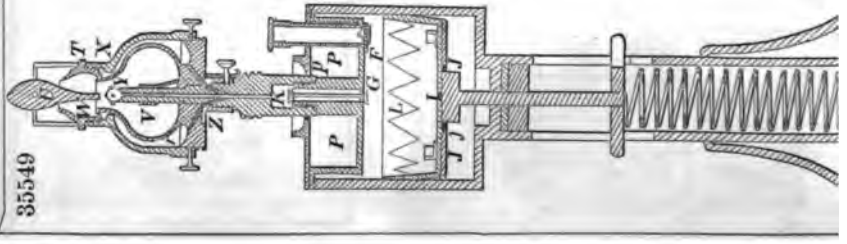

35551

35552

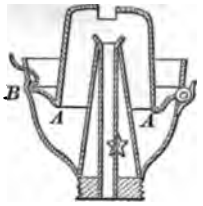

35553

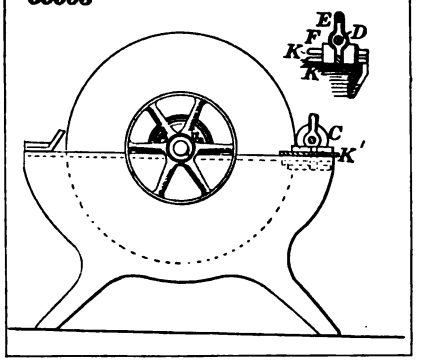

35555

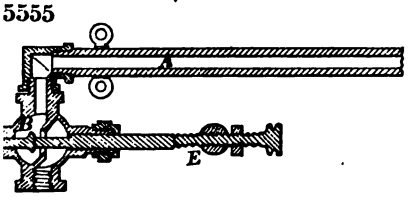

35557

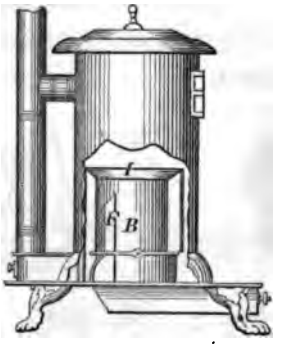

35554

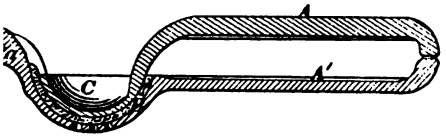

35558

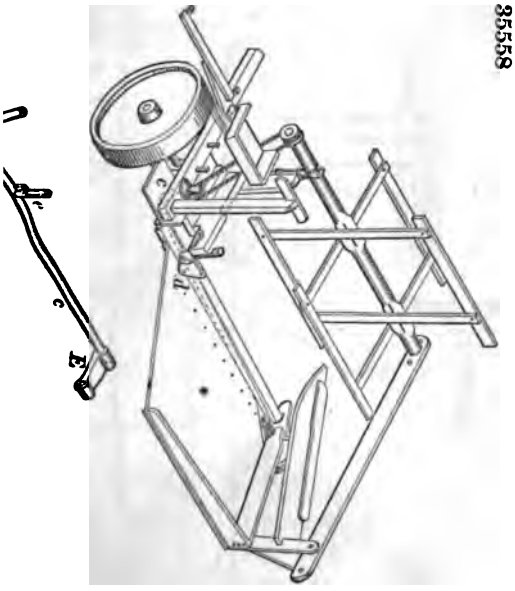

35559

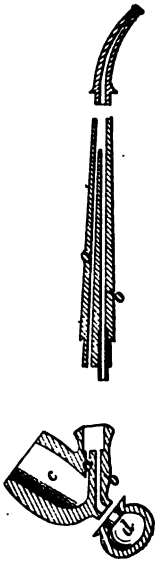

35560

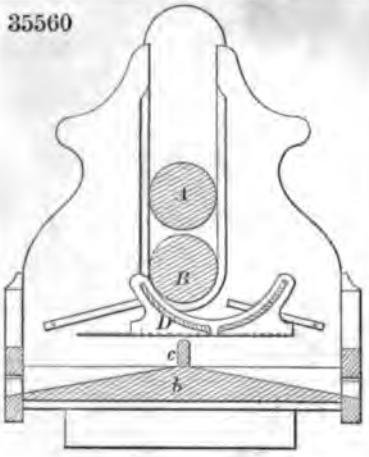

35561

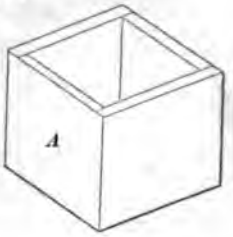

35564

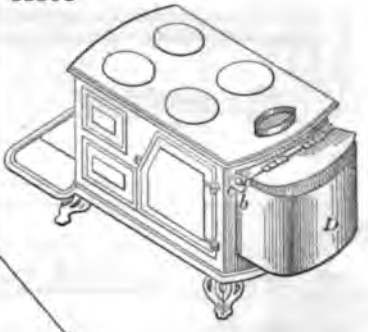

35562

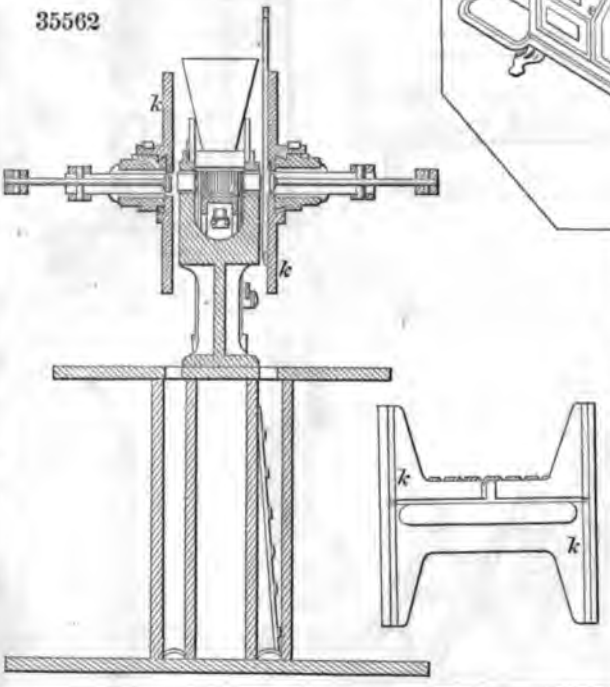

35566

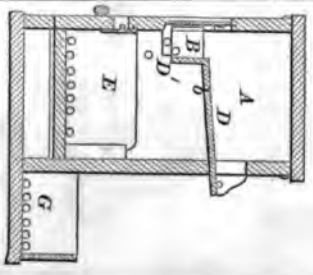

35565

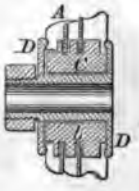

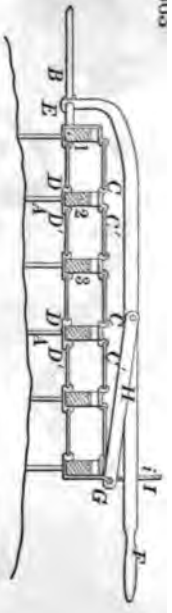

35567

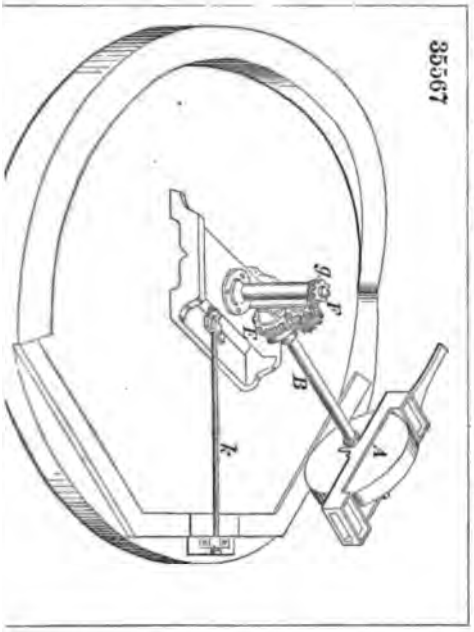

35568

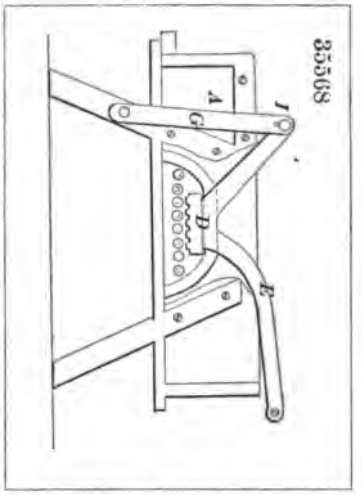

35569

35570

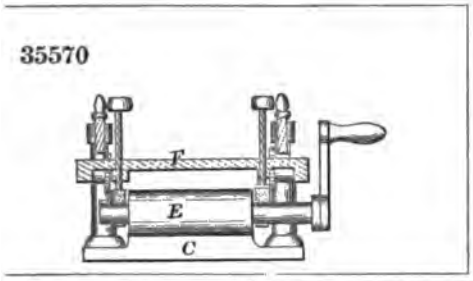

35571

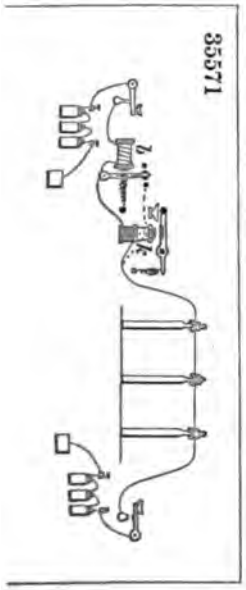

35572

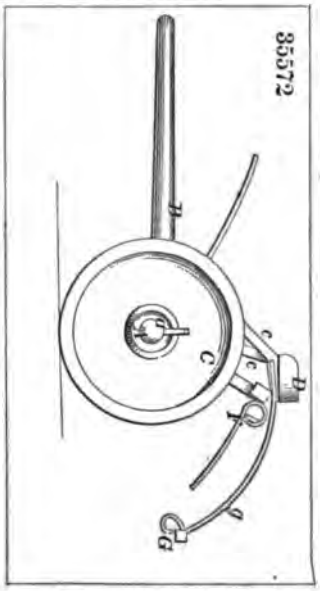

35573

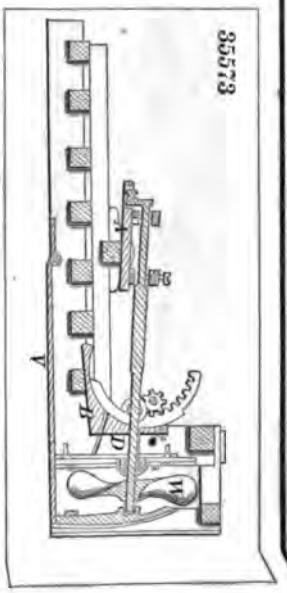

35575

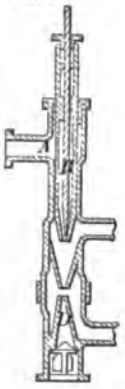

35576

35574

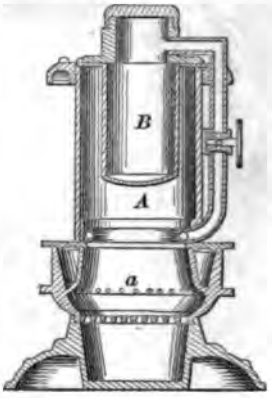

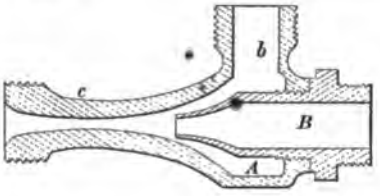

35578

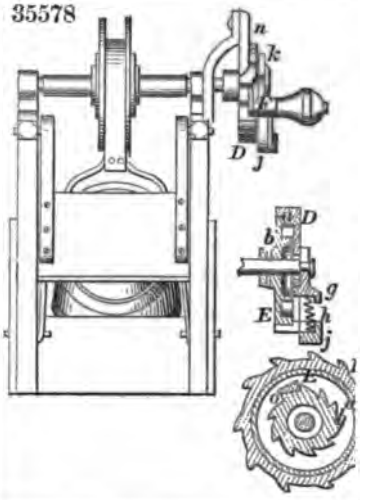

35577

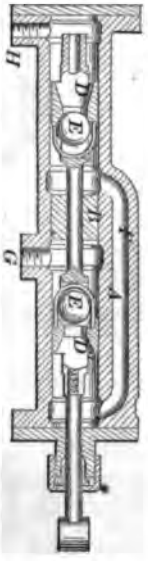

35579

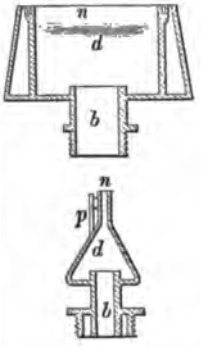

35581

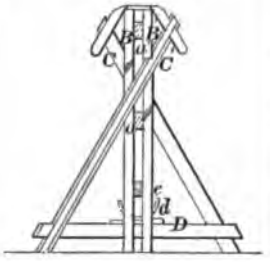

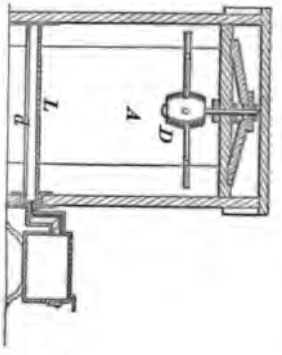

35583

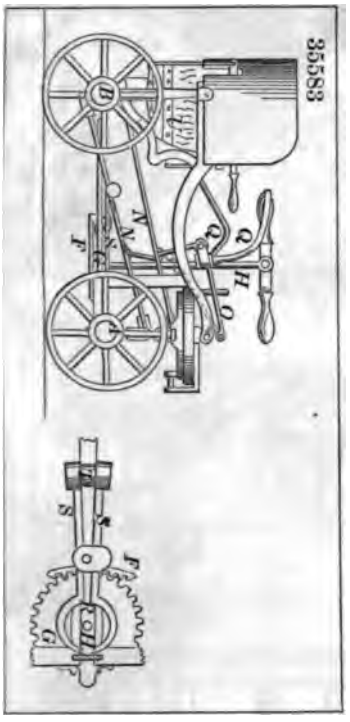

35584

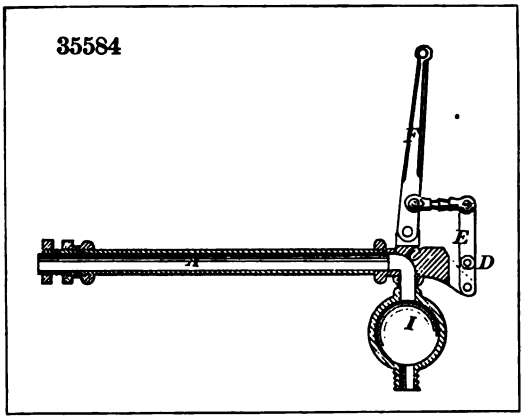

35582

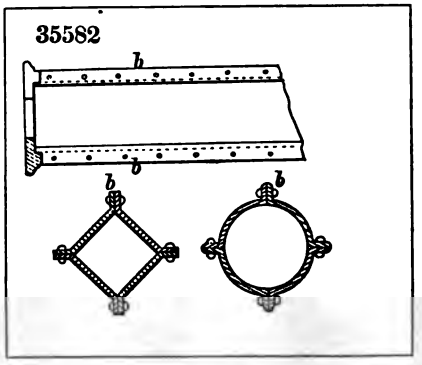

35585

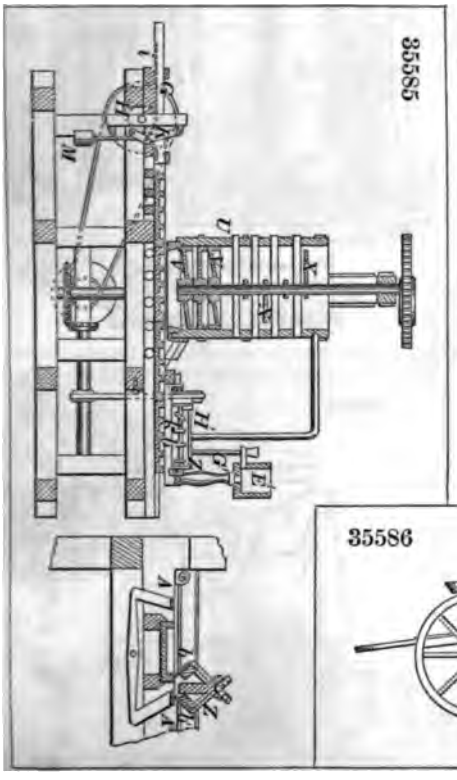

35587

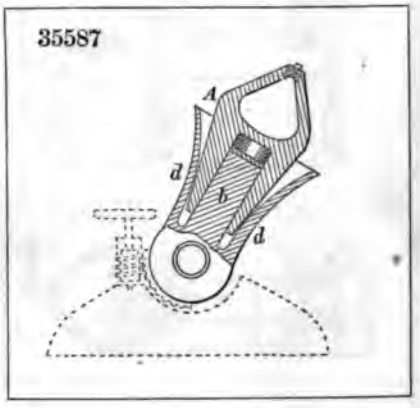

35586

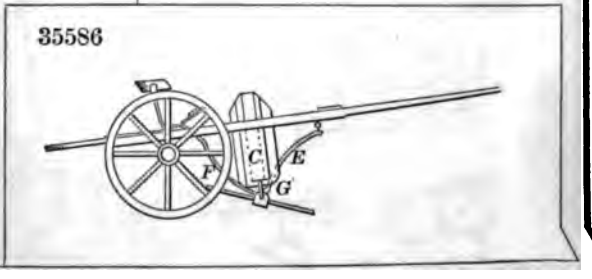

35589

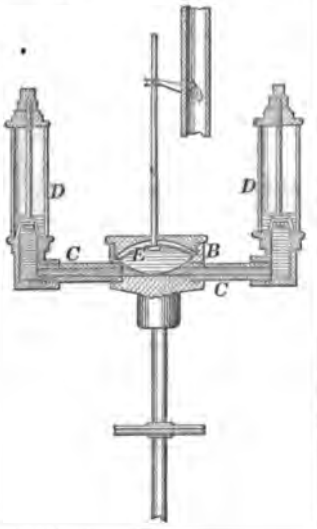

35590

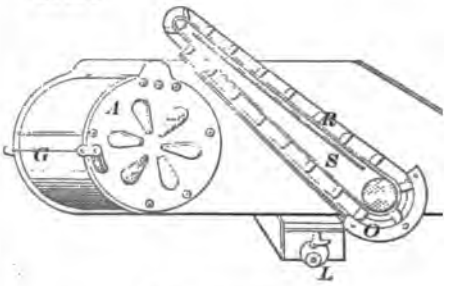

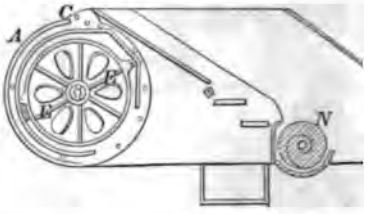

35588

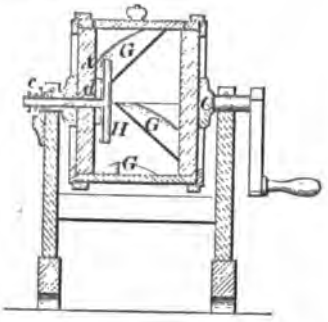

35592

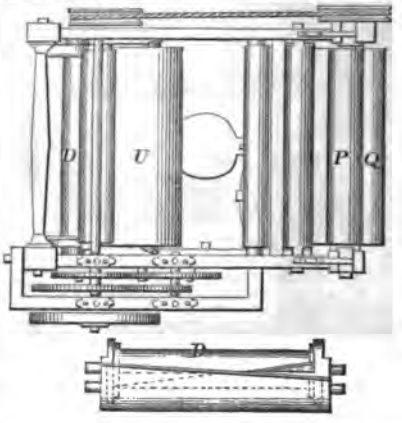

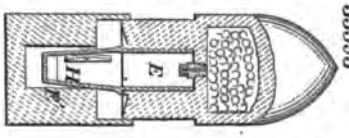

35593

35594

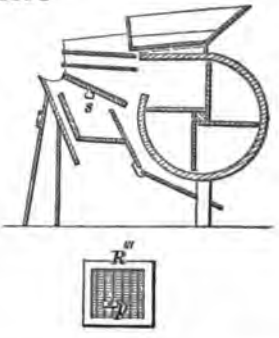

35591

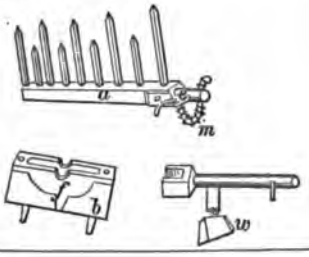

5

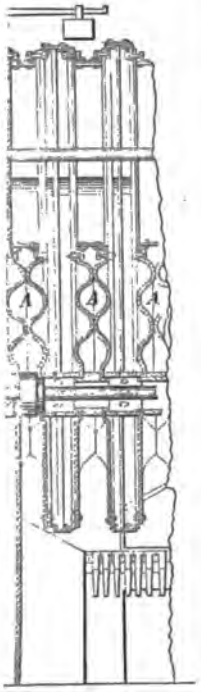

35597

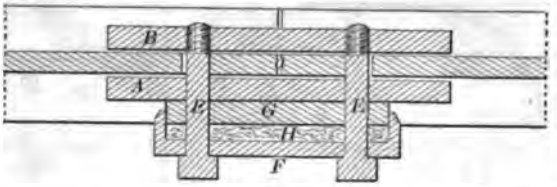

35596

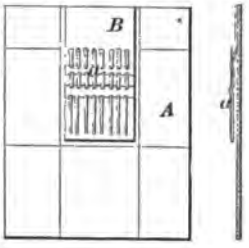

35600

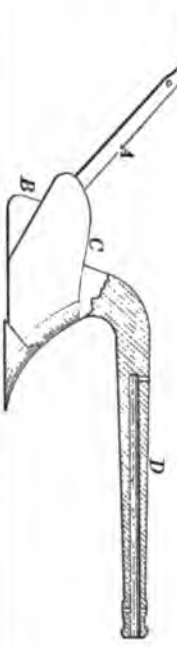

35602

35601

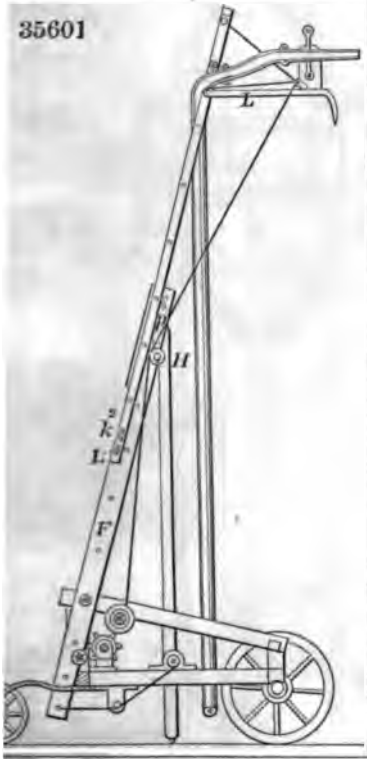

35598

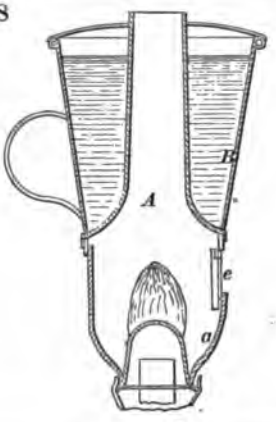

35603

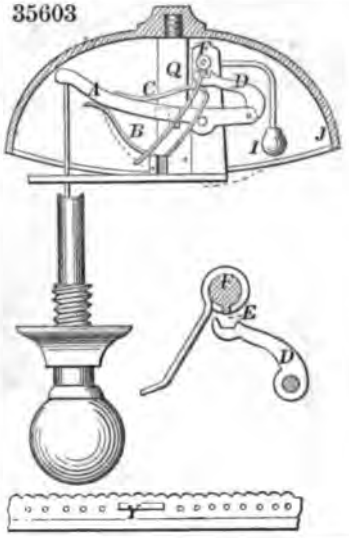

35606

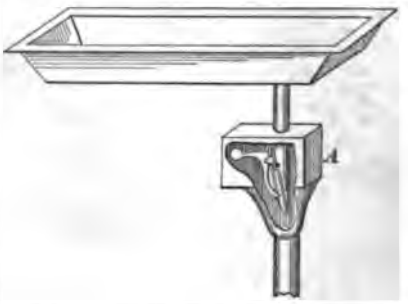

35604

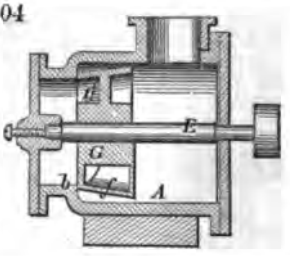

35607

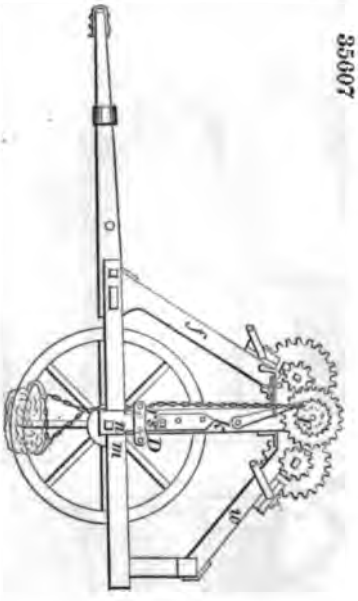

35609

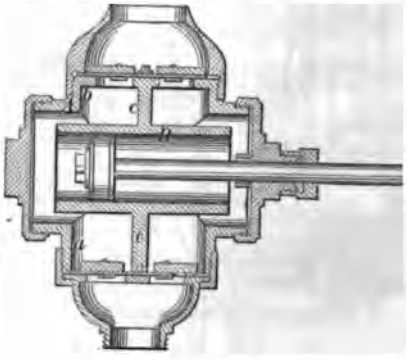

35608

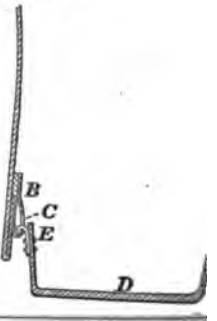

35605

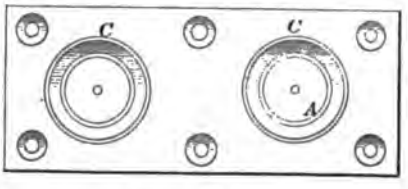

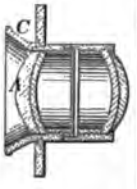

35610

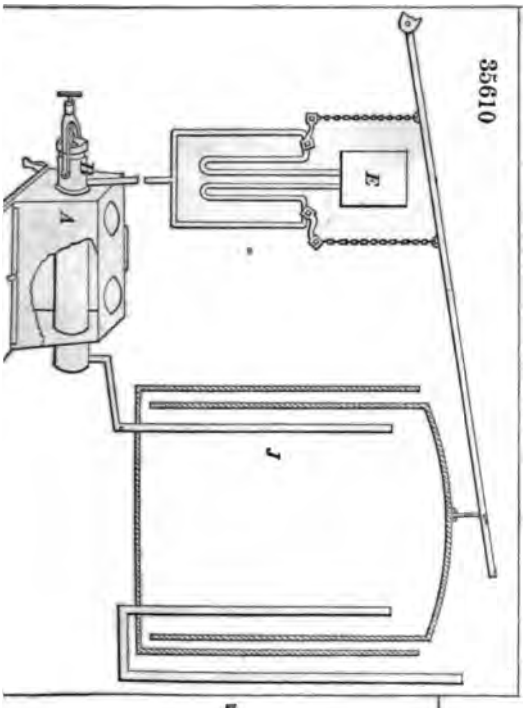

35611

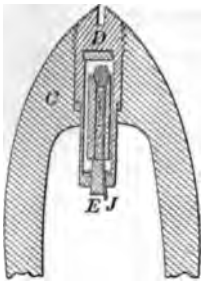

35612

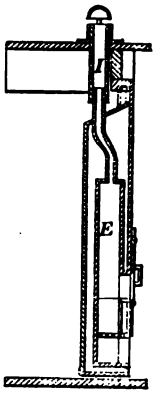

35614

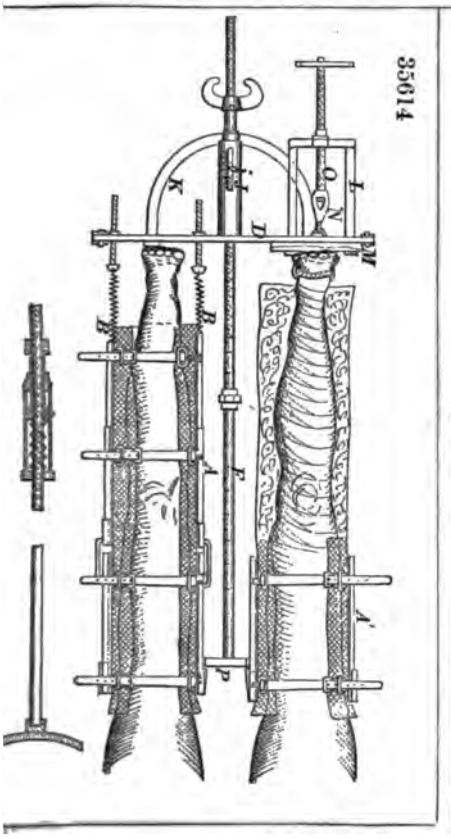

35613

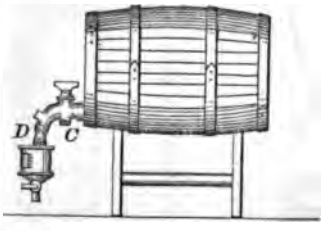

35615

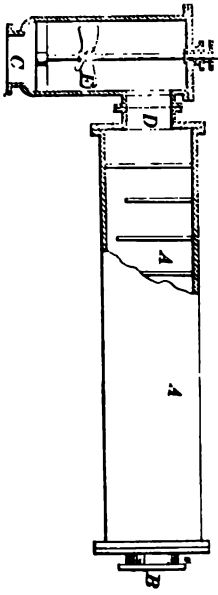

35616

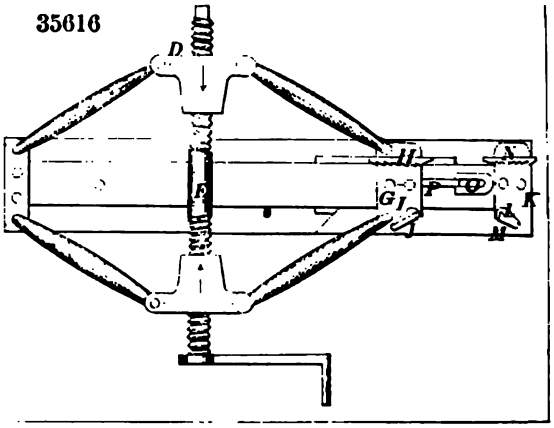

35617

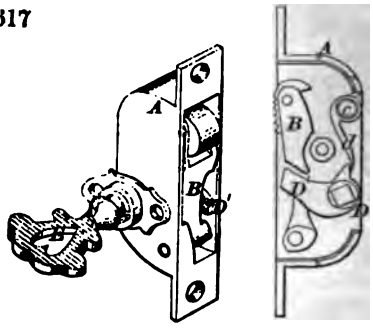

35618

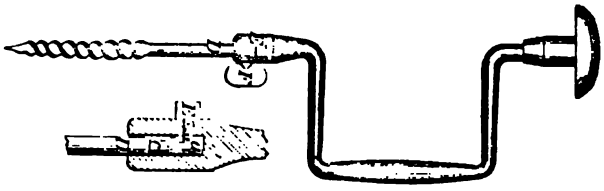

35620

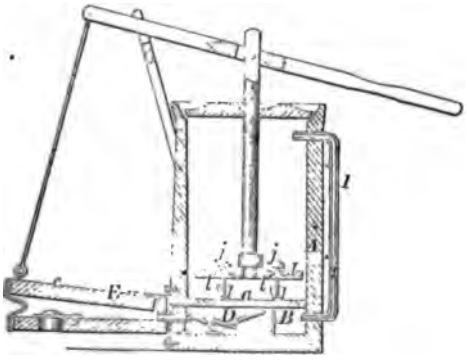

35619

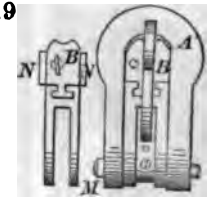

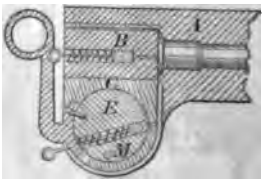

35621

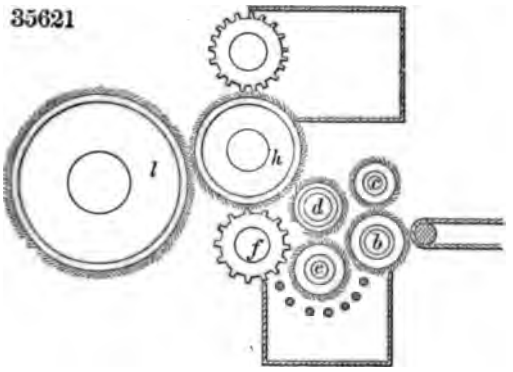

35622

5623

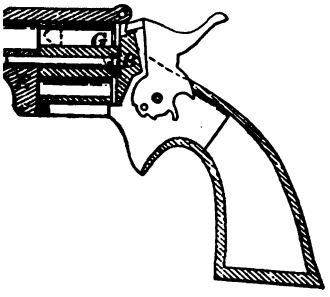

35629

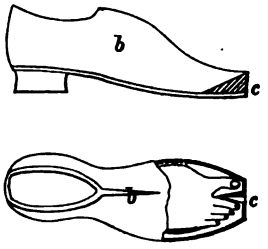

5625

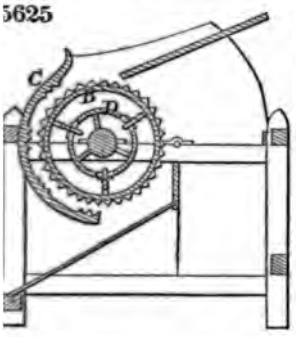

35628

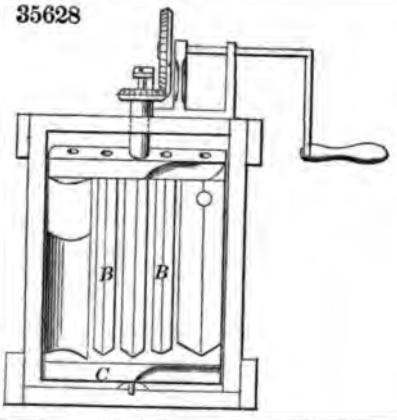

627

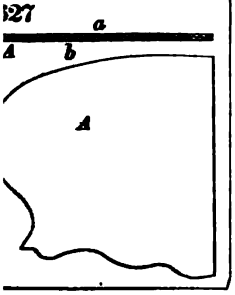

35624

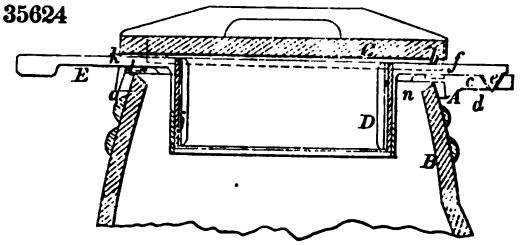

35630

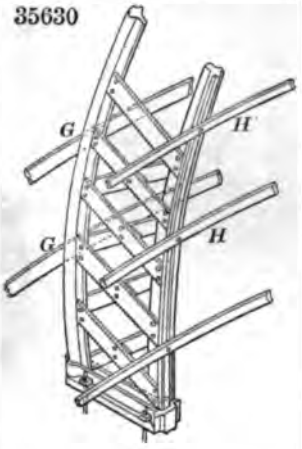

35631

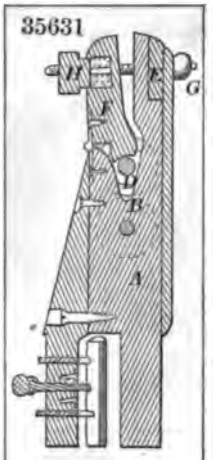

35632

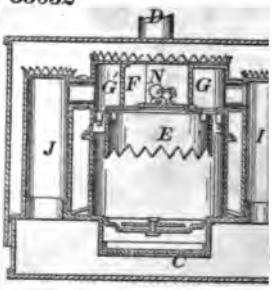

35635

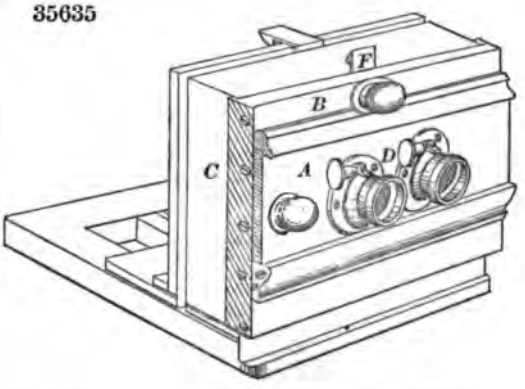

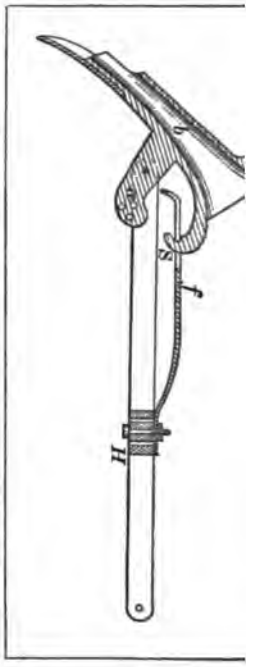

35633

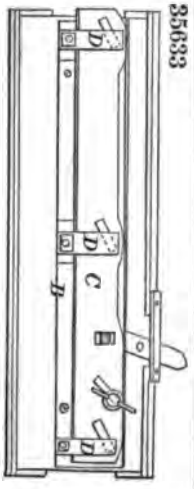

35636

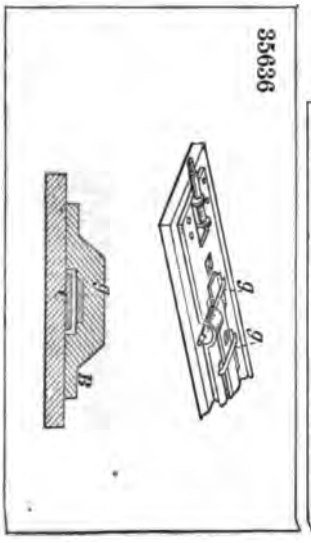

35637

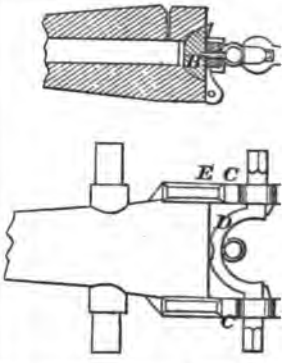

35638

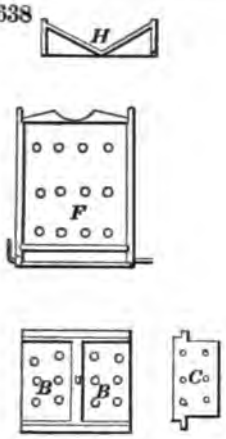

35639

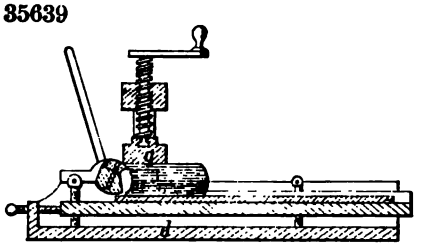

35640

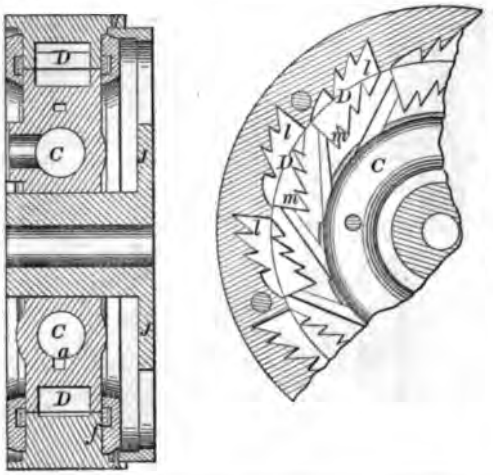

35642

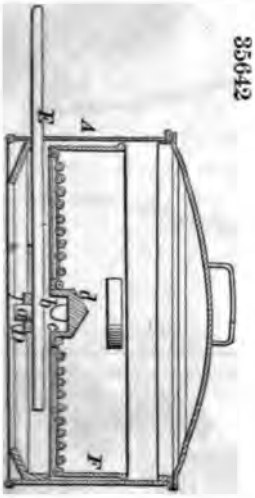

35641

35645

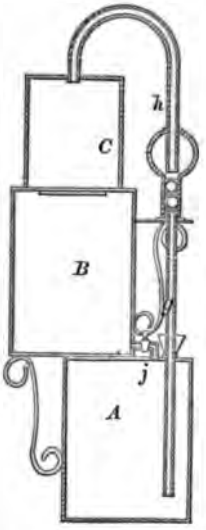

35646

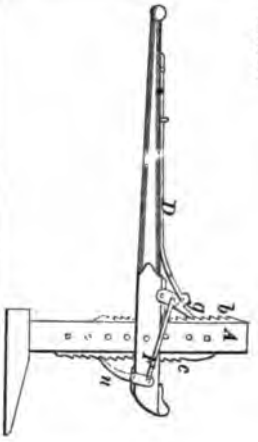

35644

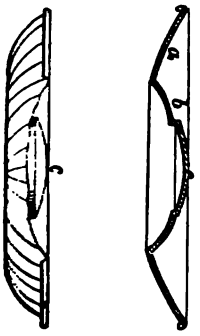

35647

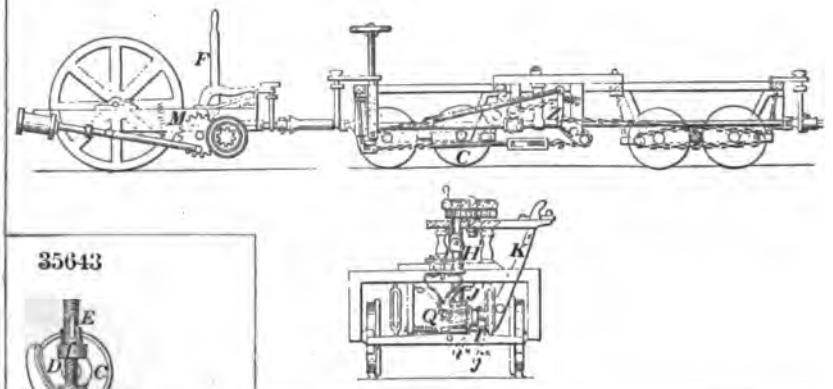

35643

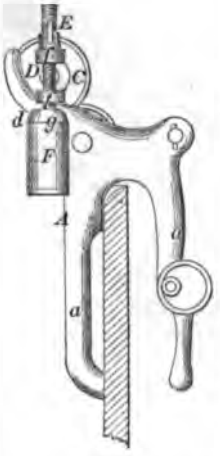

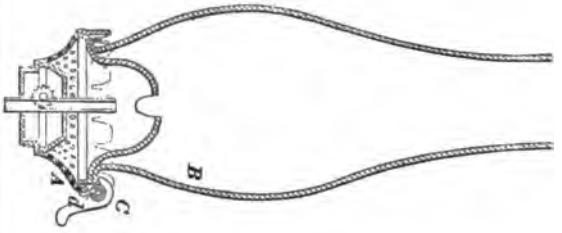

35648

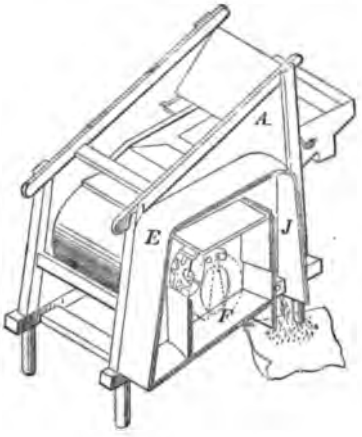

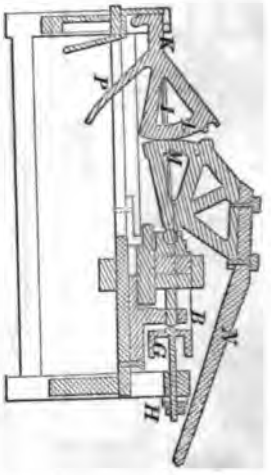

35651

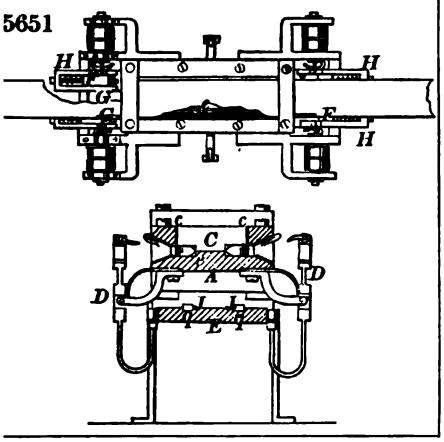

35652

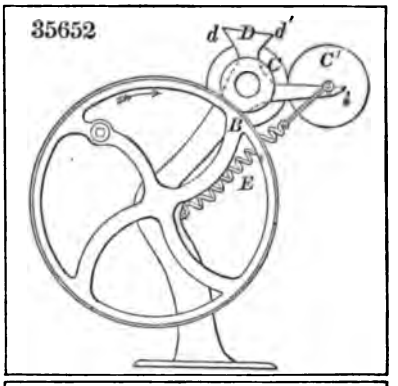

35653

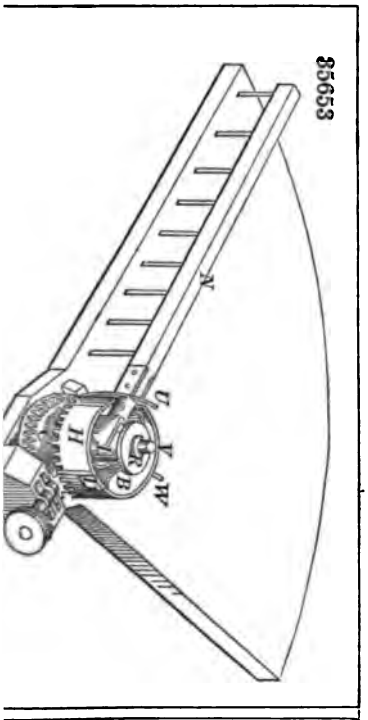

35657

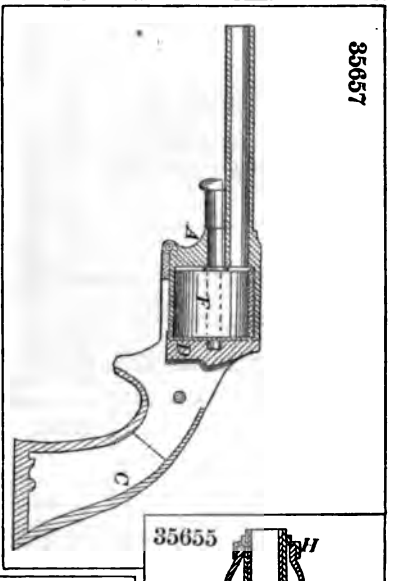

35655

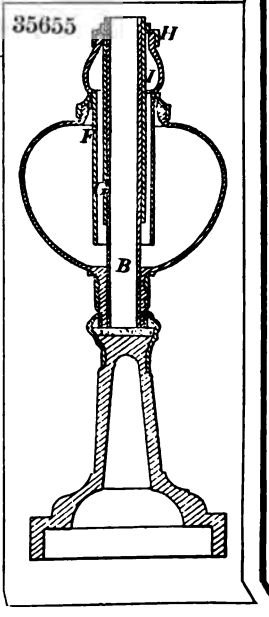

35656

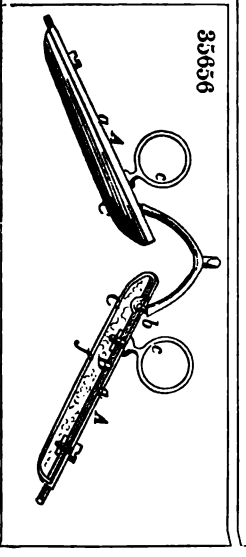

35654

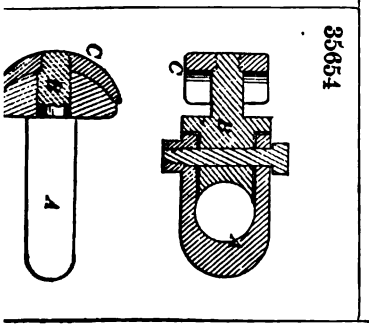

35658

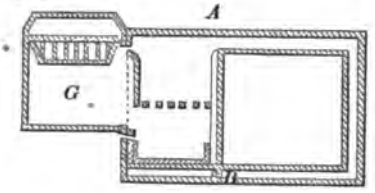

35660

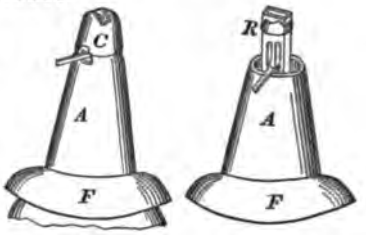

35661

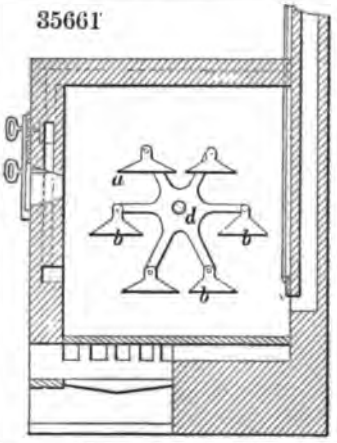

35662

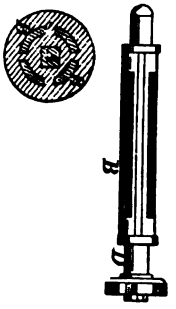

35664

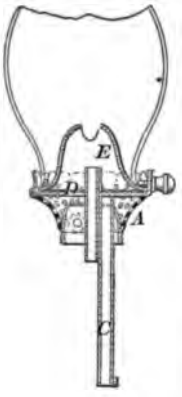

35665

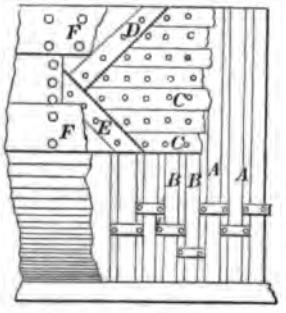

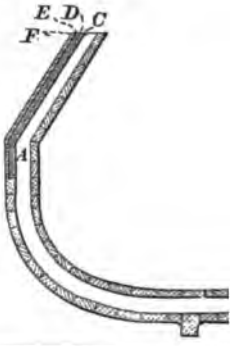

35667

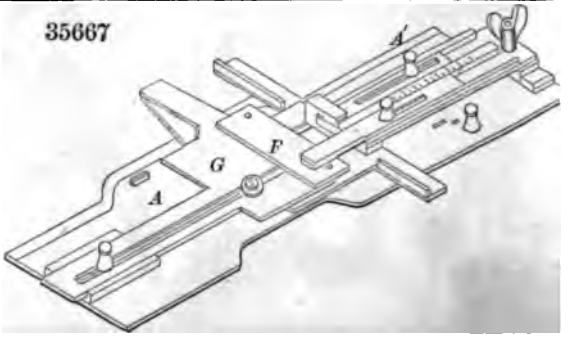

35666

35668

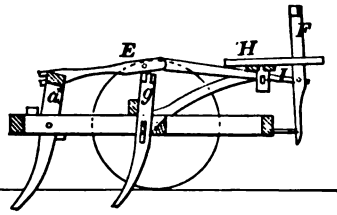

35669

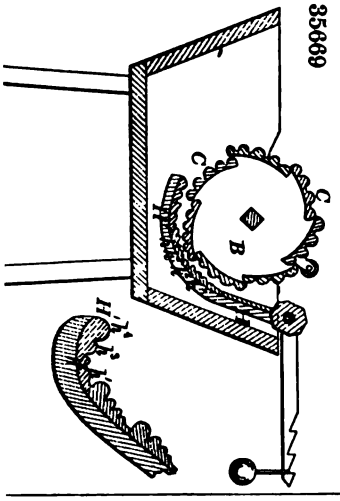

35671

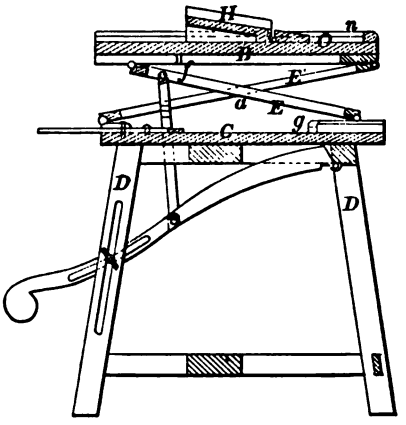

5670

35672

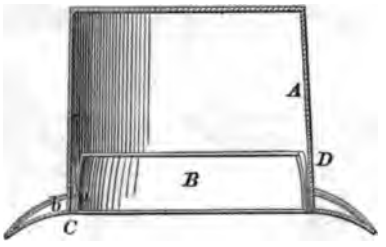

35673

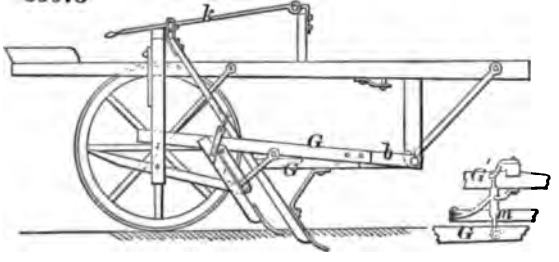

35674

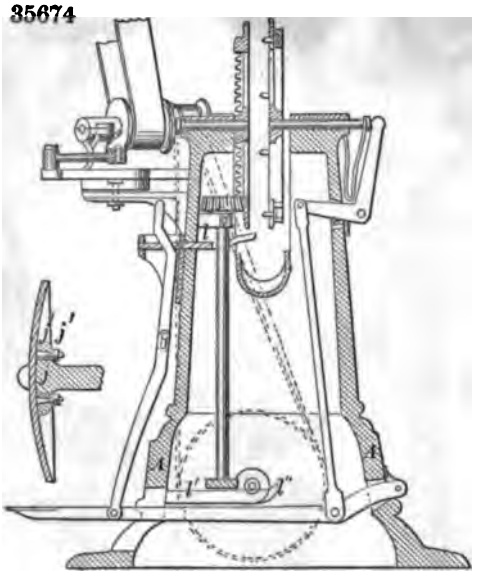

35675

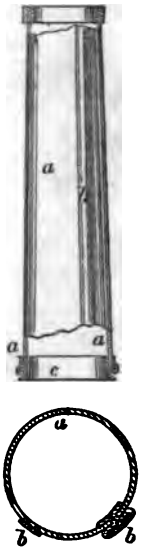

35677

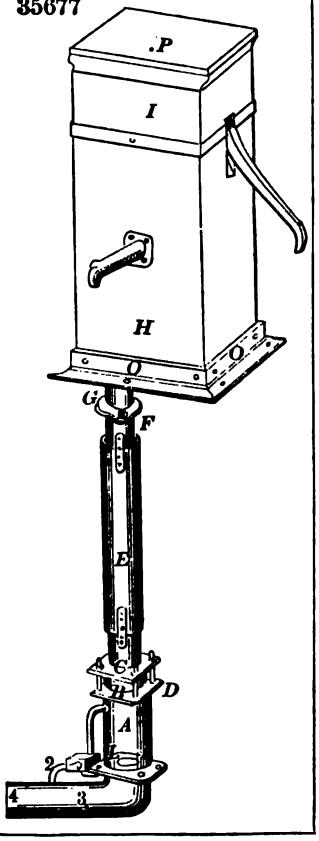

35676

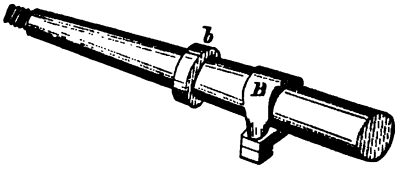

35678

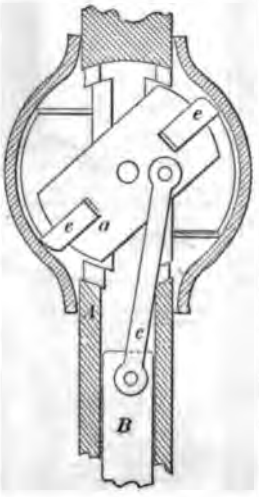

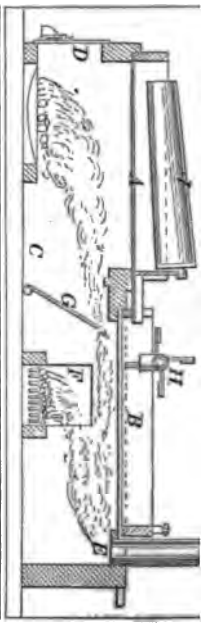

35681

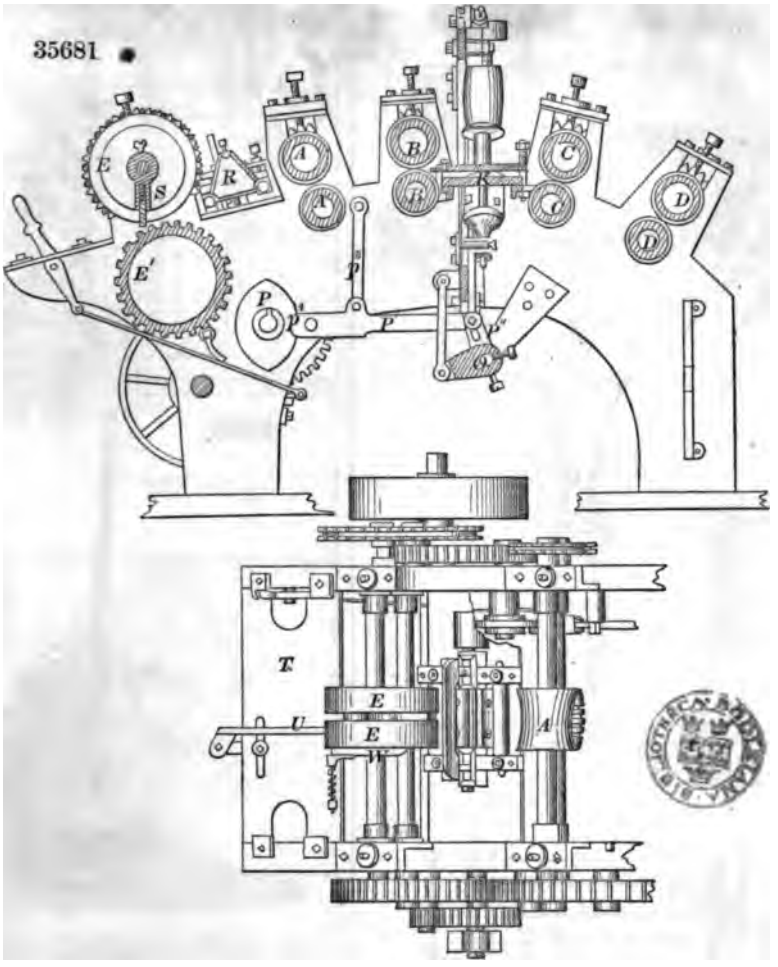

35682

35680

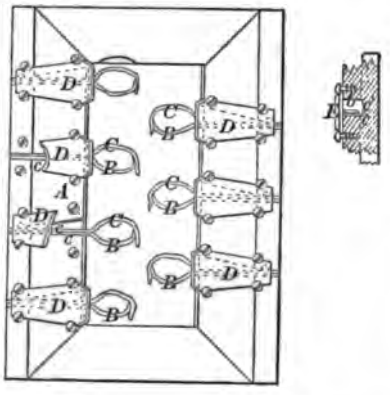

35683

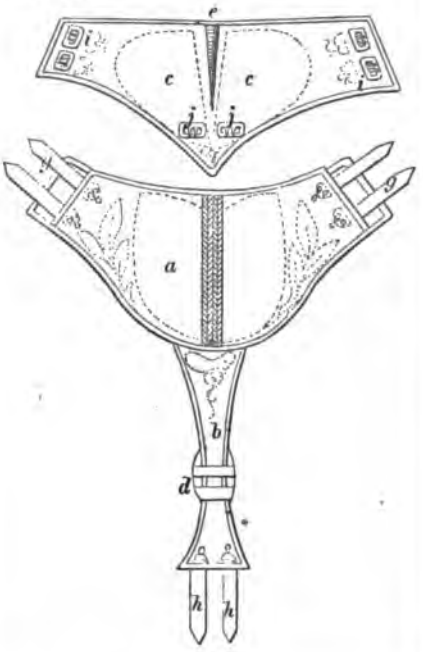

35684

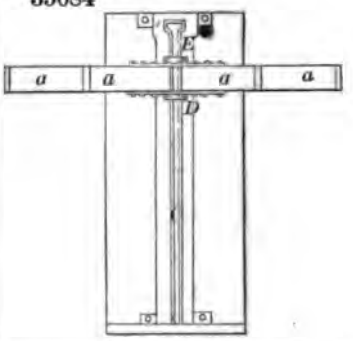

35686

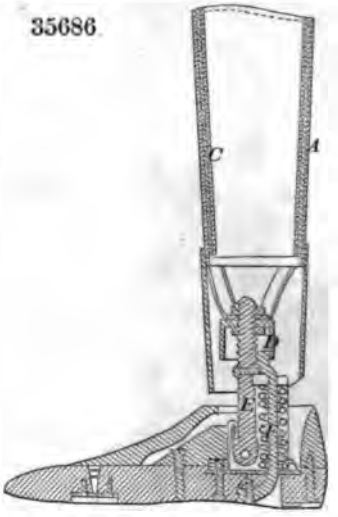

35689

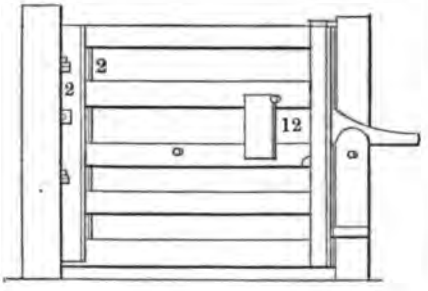

35688

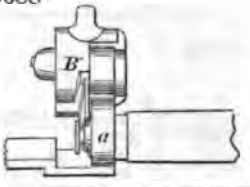

35685

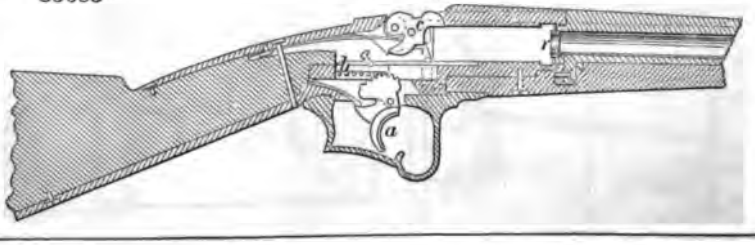

35692

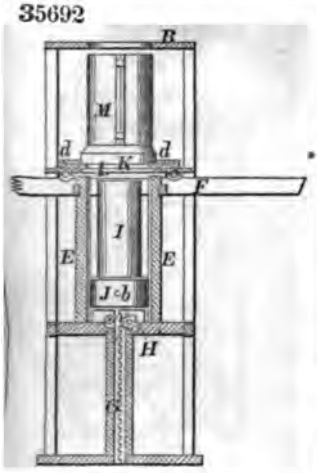

35690

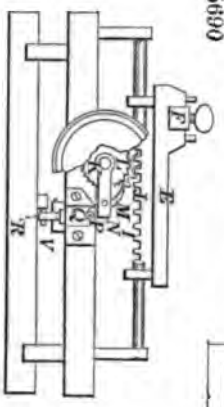

35691

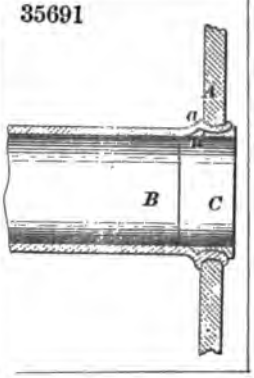

35693

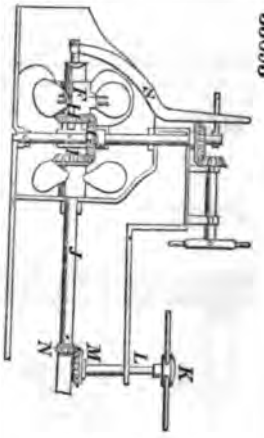

35695

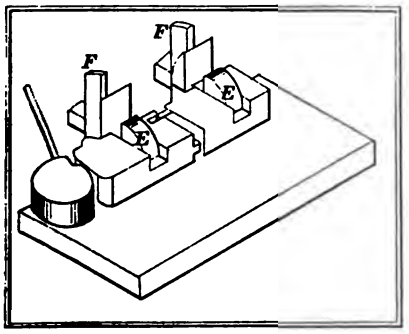

35694

35696

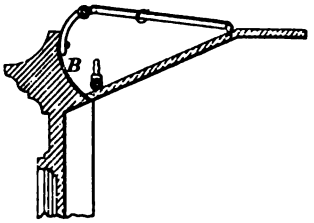

35698

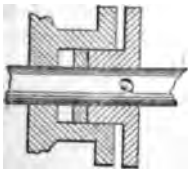

35697

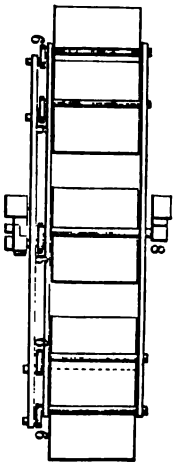

35699

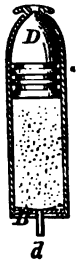

35700

35701

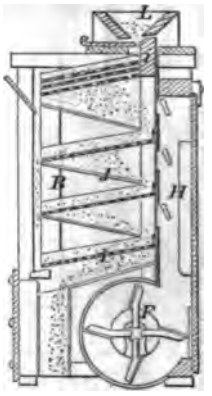

35702

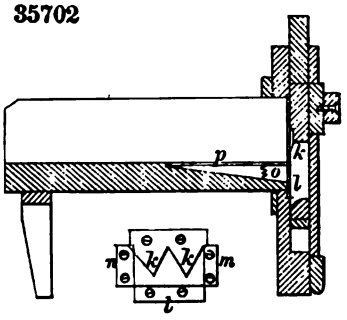

35703

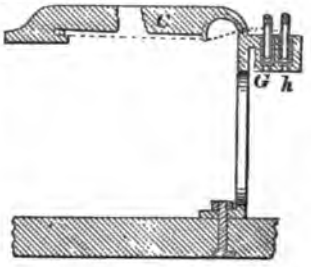

35704

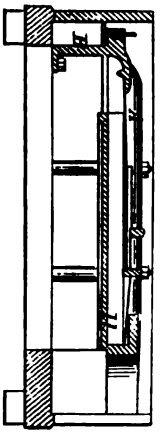

35707

35705

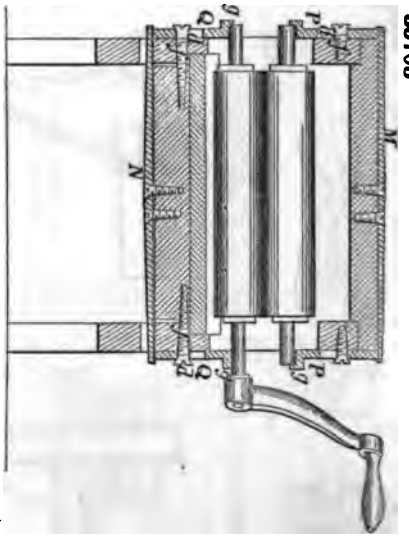

35708

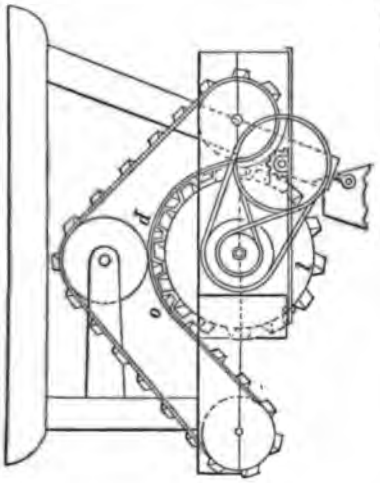

35709

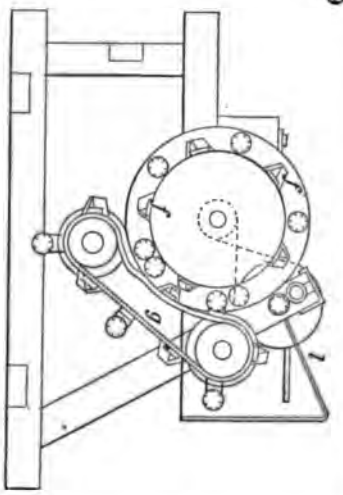

35712

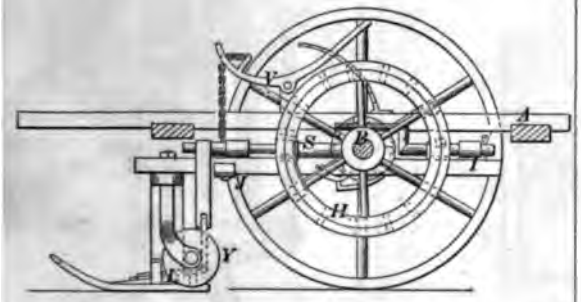

35710

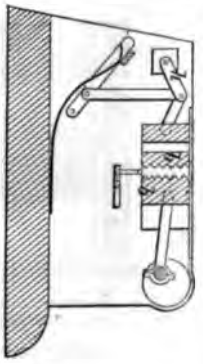

35713

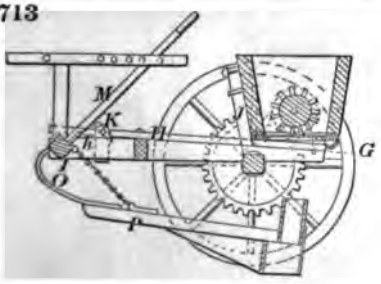

35711

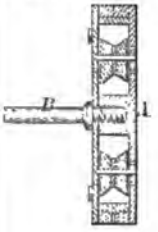

35714

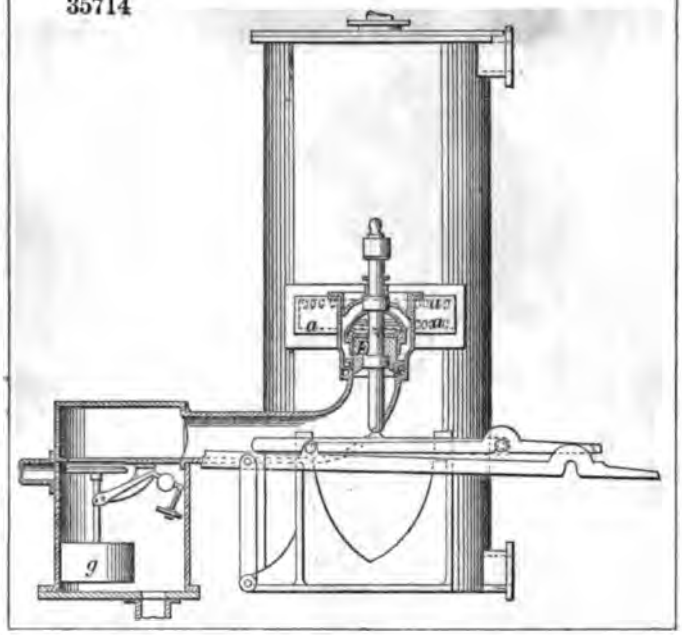

35716

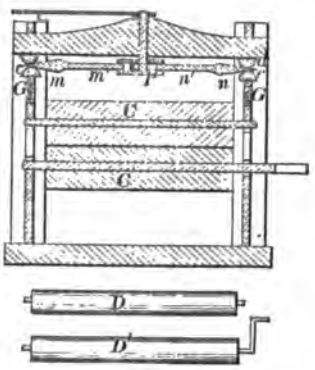

35717

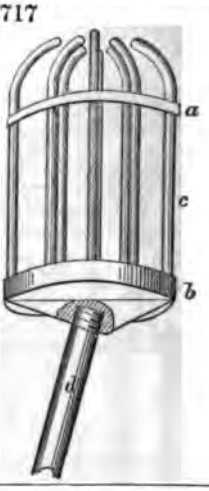

35718

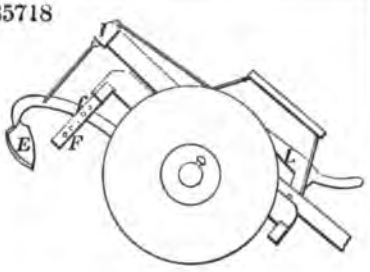

35719

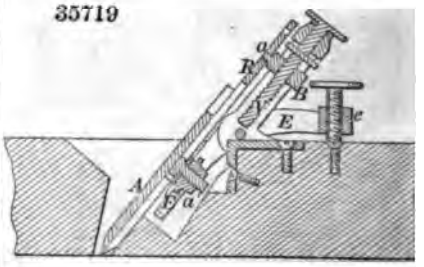

35721

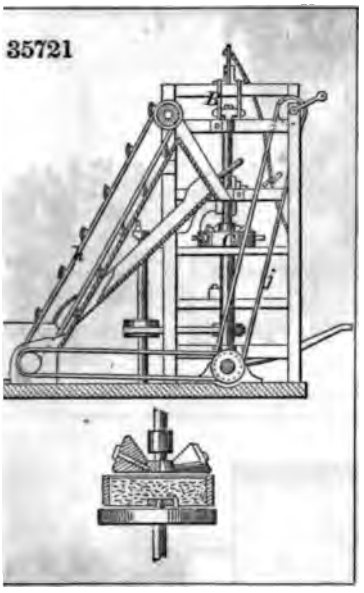

35722

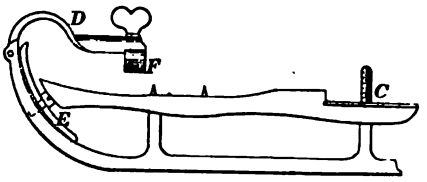

35725

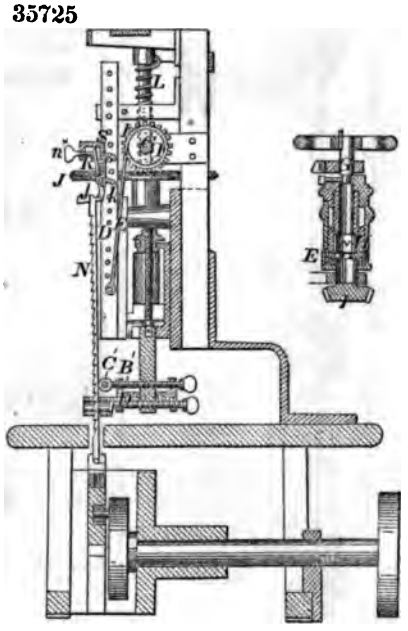

5723

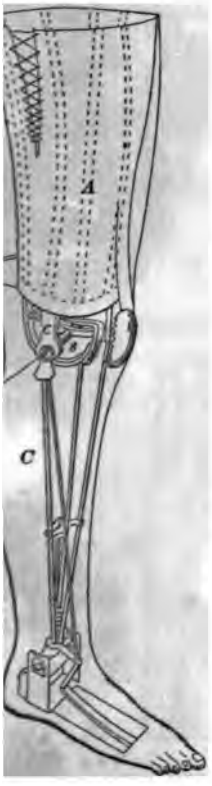

35724

35726

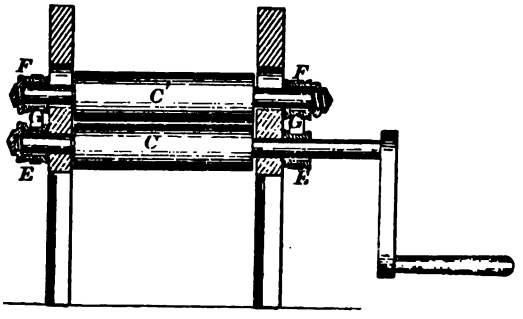

35727

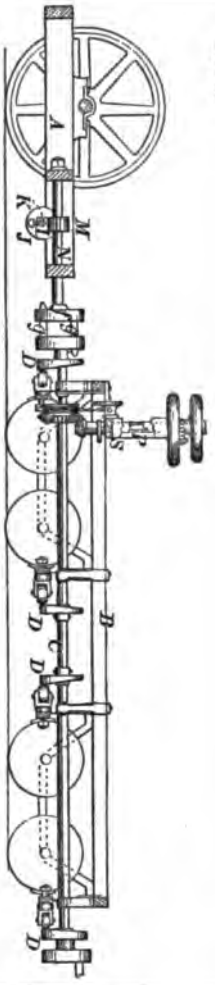

35728

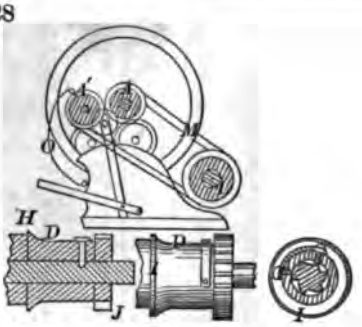

35729

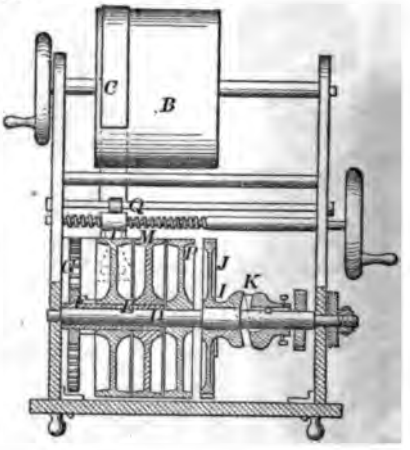

35730

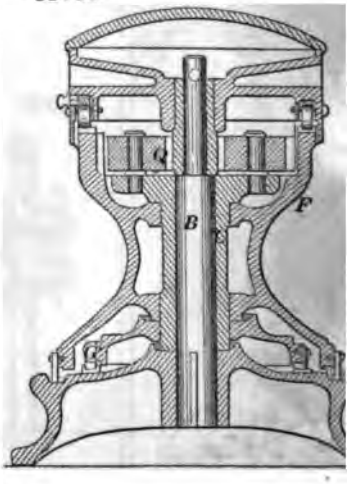

35731

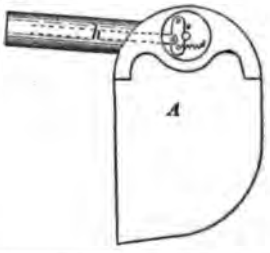

35732

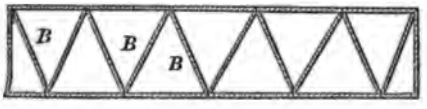

733

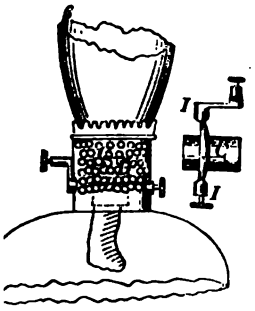

35734

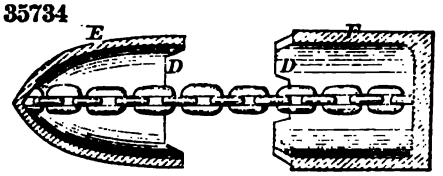

35735

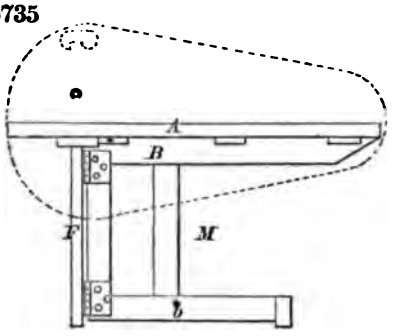

35736

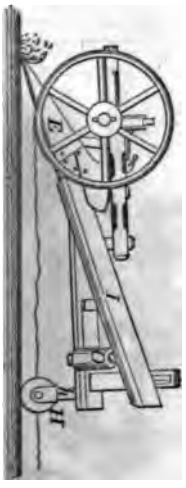

35737

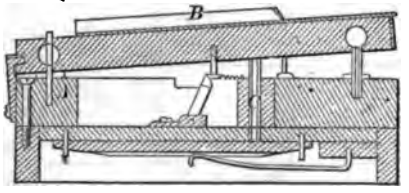

738

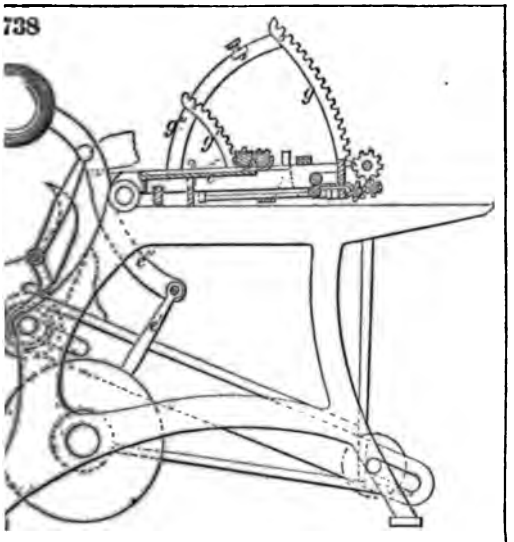

35739

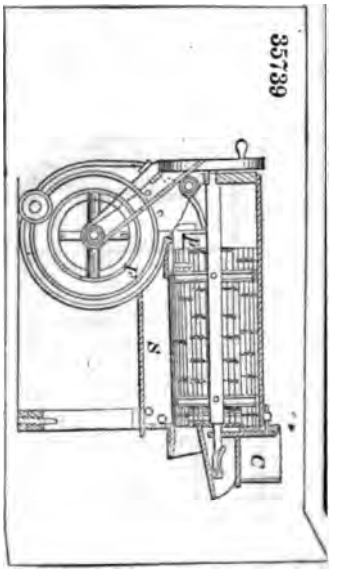

35740

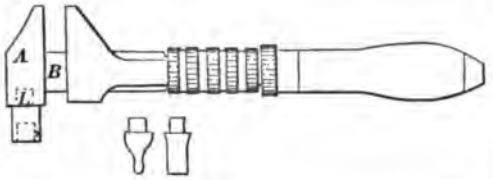

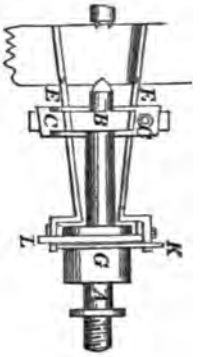

35743

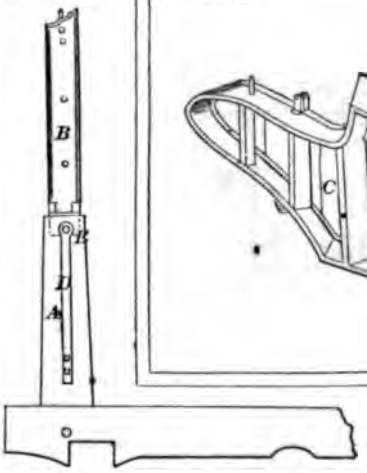

35744

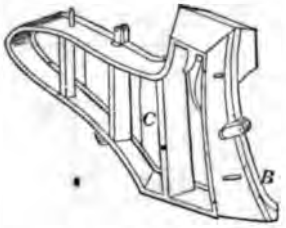

35746

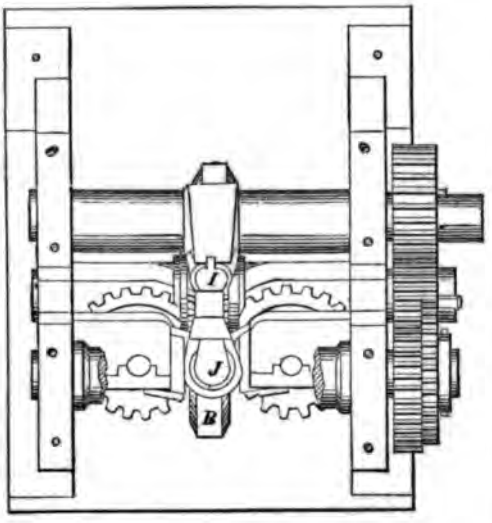

35747

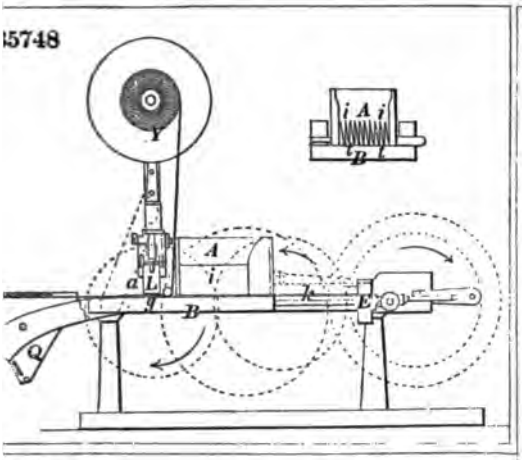
35748
Y
A
a
L
B
E
k
i
j

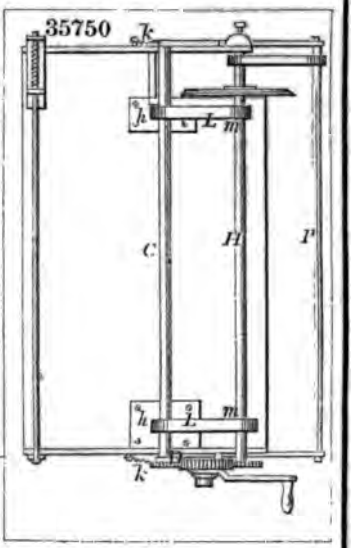
35750
k
h
L
m
C
H
P

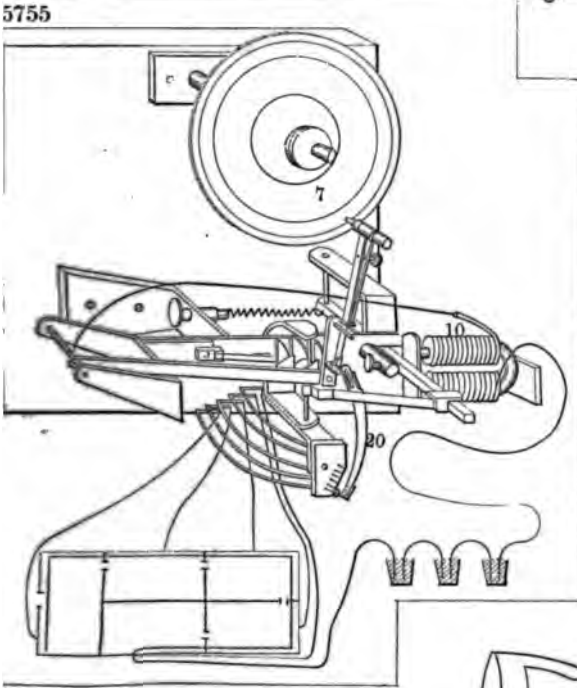
35755
7
10
20

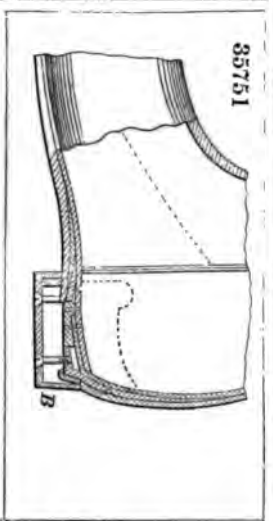
35751
B

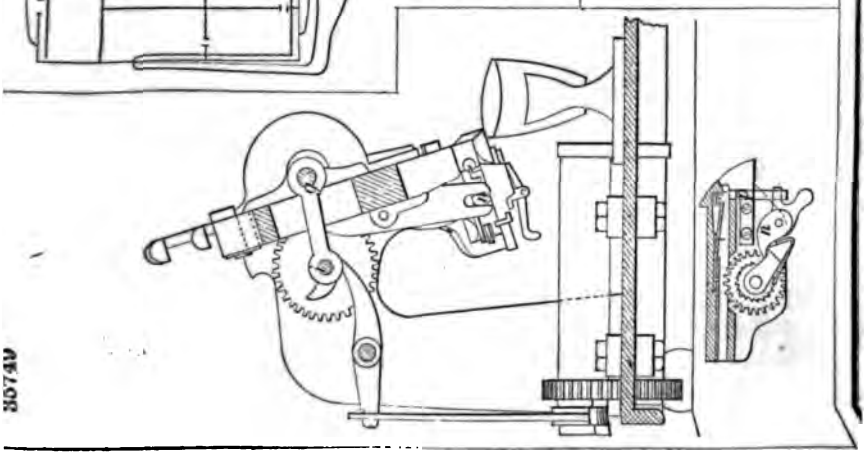
35749
R

35756

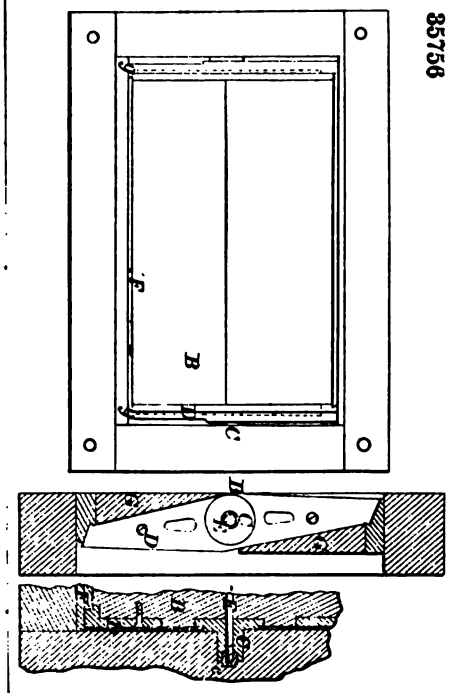

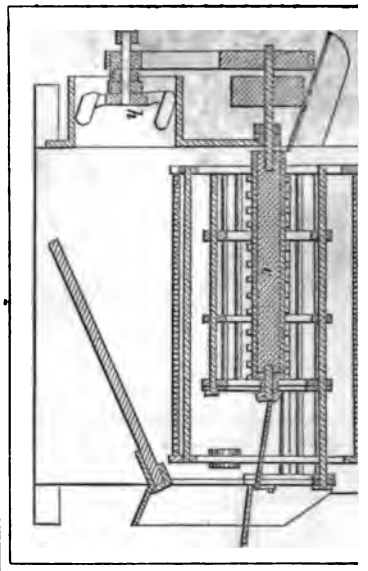

35759

35758

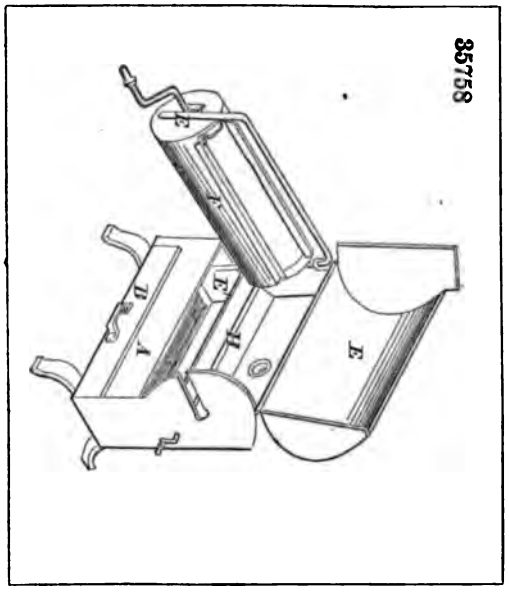

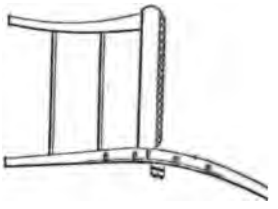

35760

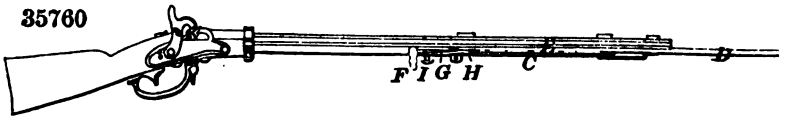

35762

35763

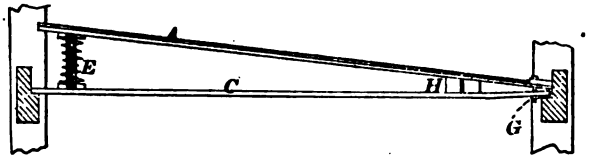

35764

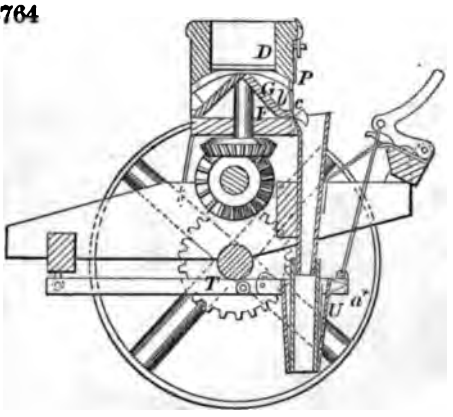

35765

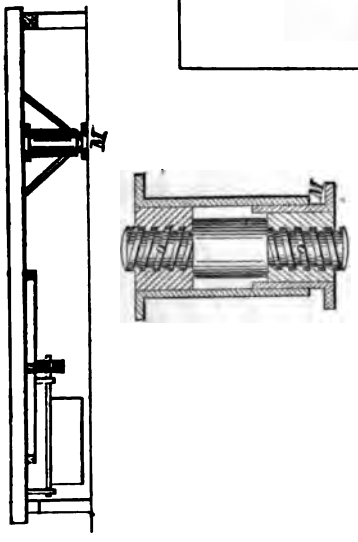

35767

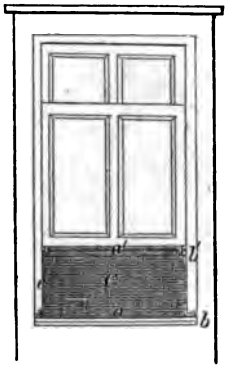

35766

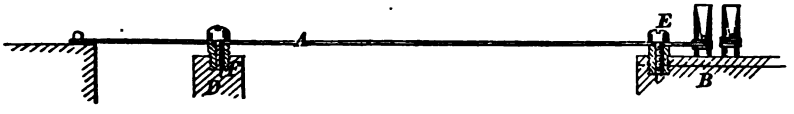

35768

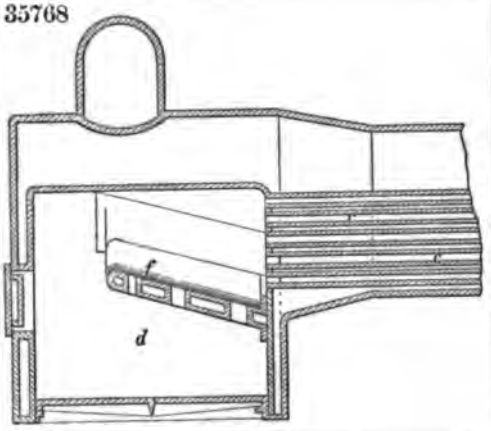

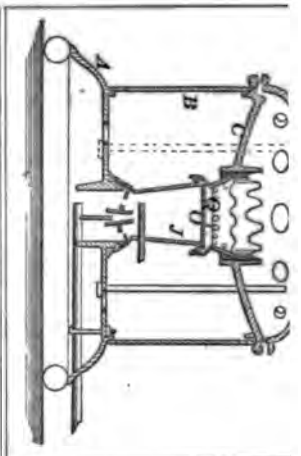

35772

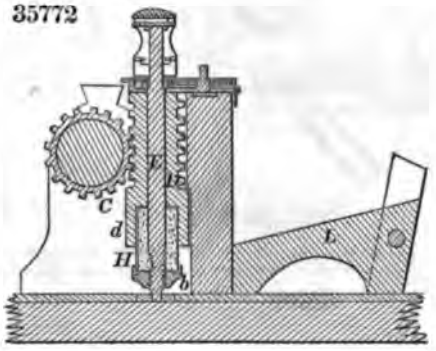

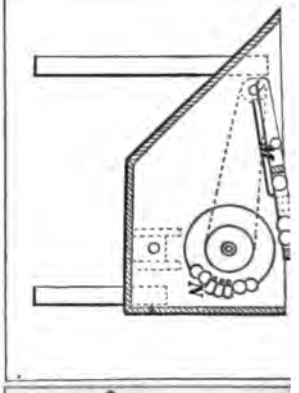

35774

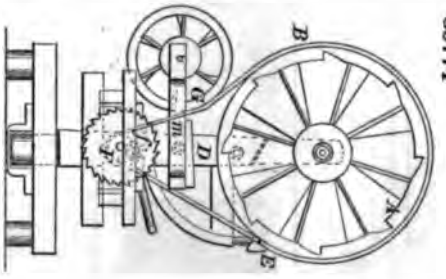

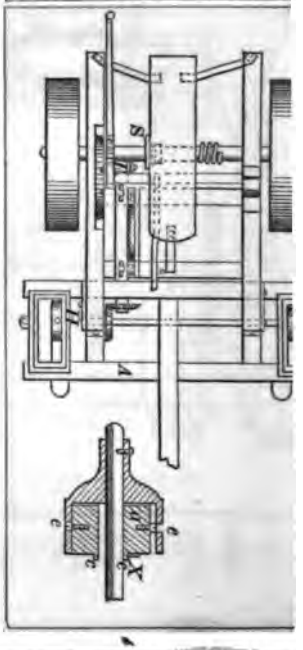

35773

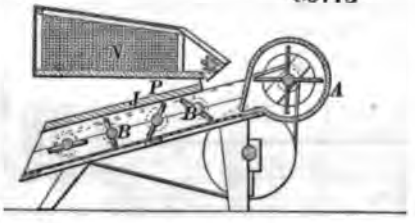

35775

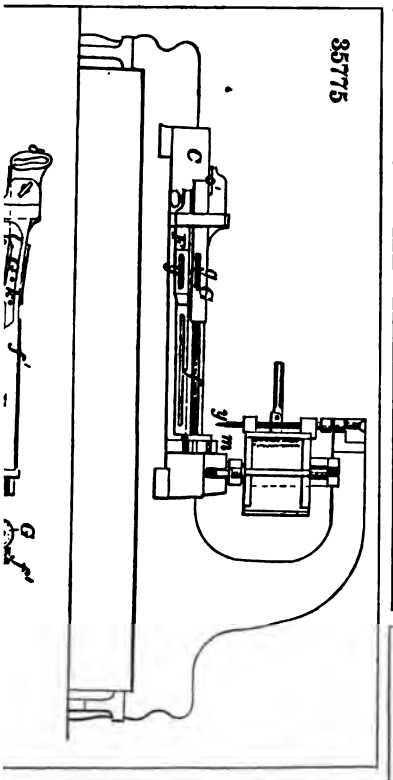

35779

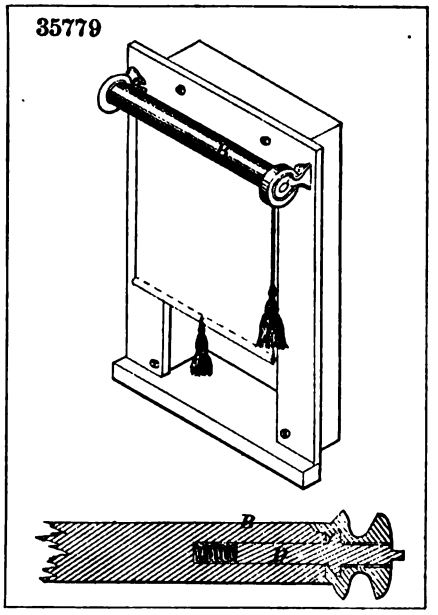

35780

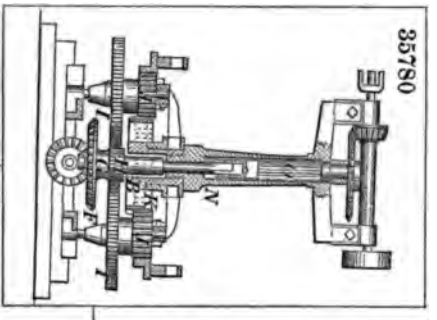

5778

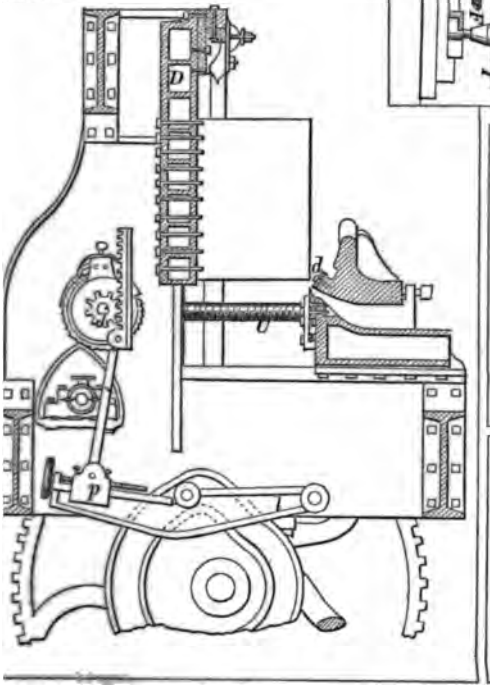

35776

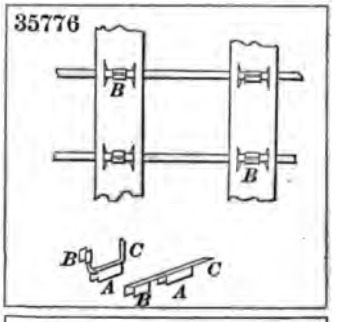

35777

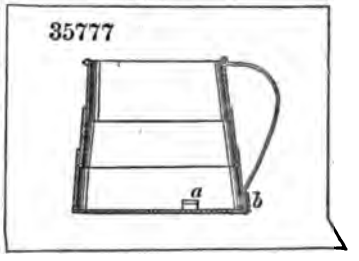

35783

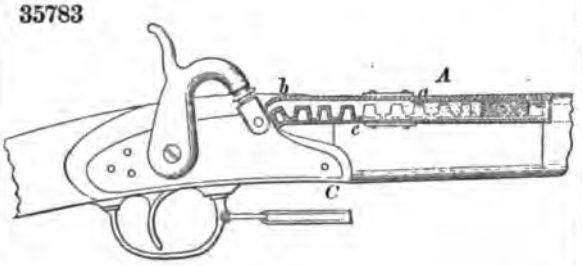

35782

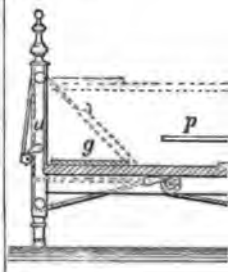

35786

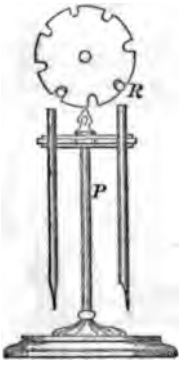

35787

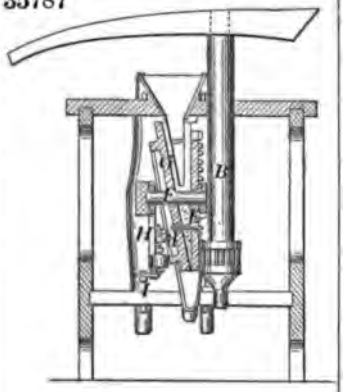

35784

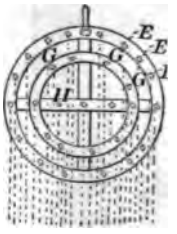

35785

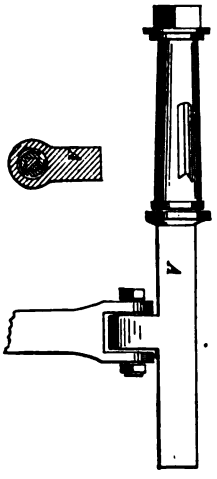

35781

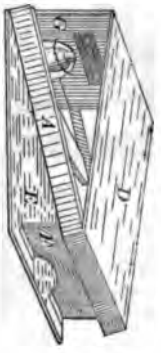

35788

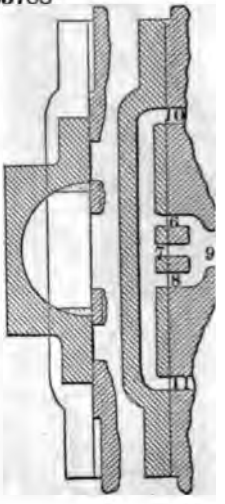

35789

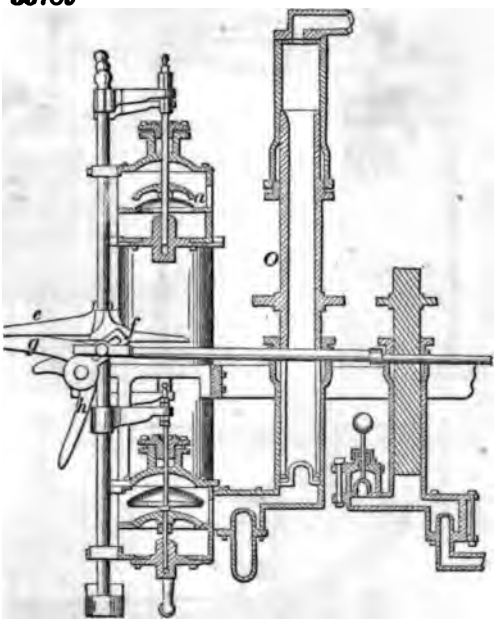

35791

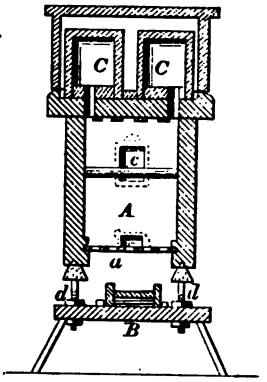

35793

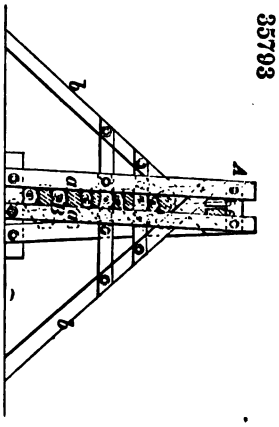

35790

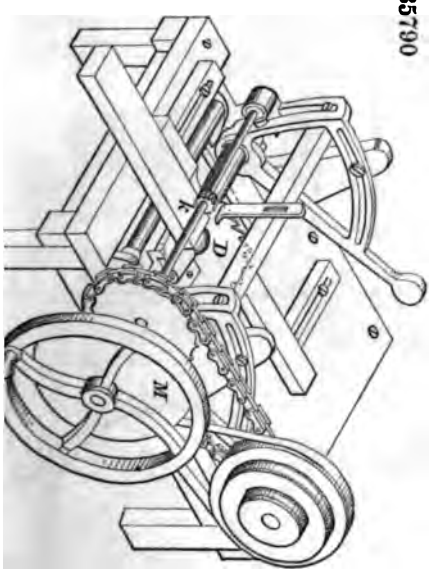

35792

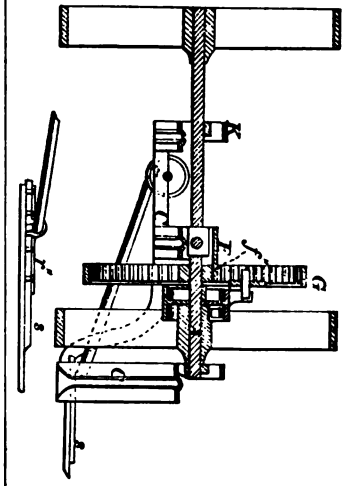

35794

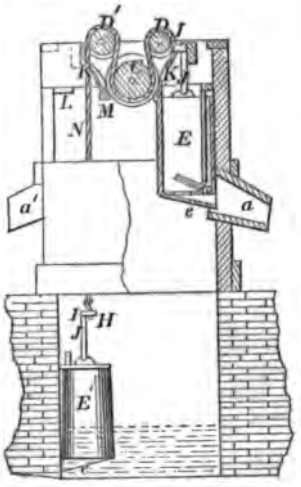

35796

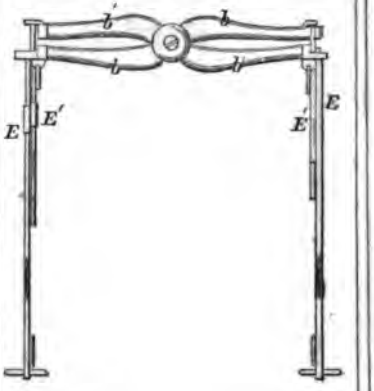

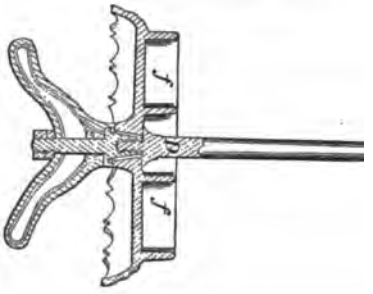

35797

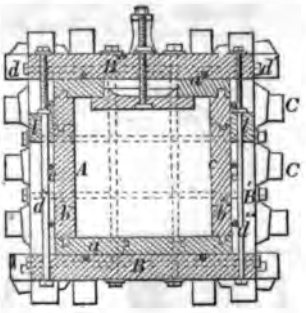

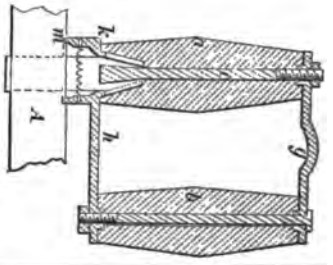

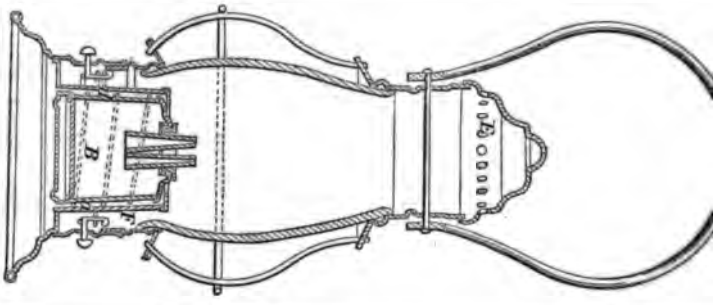

35805

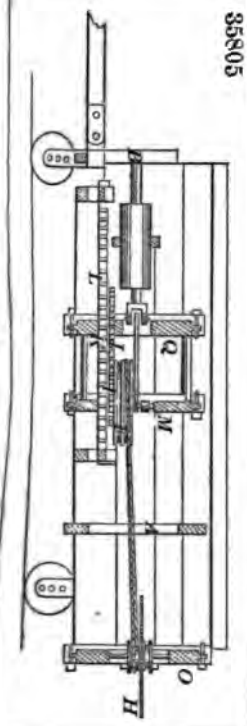

35803

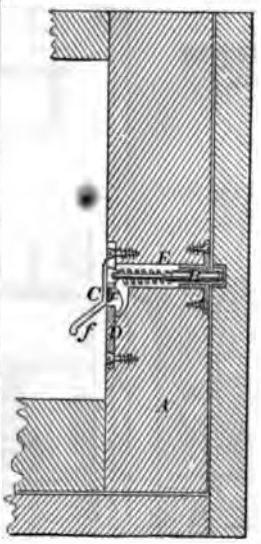

35806

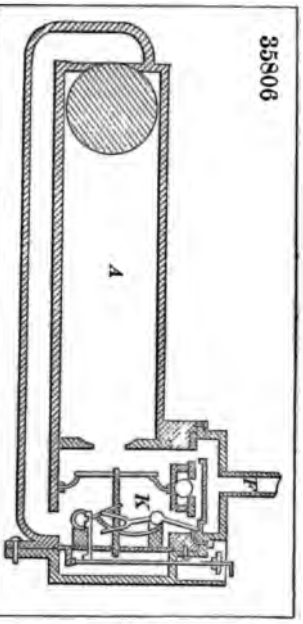

35804

35801

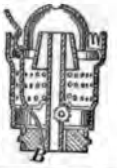

35807

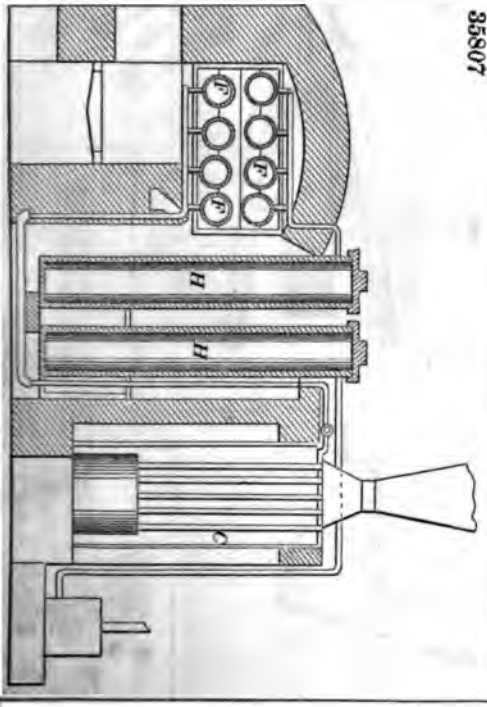

35802

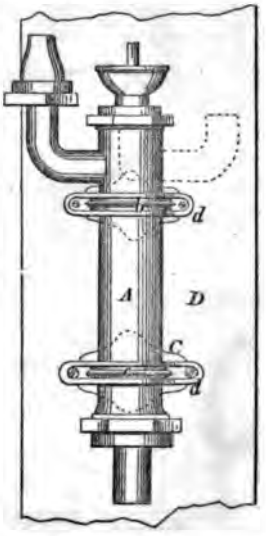

35808

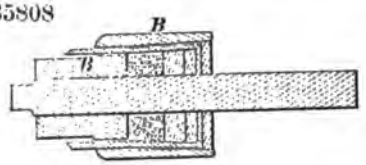

35809

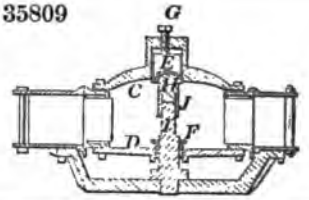

35810

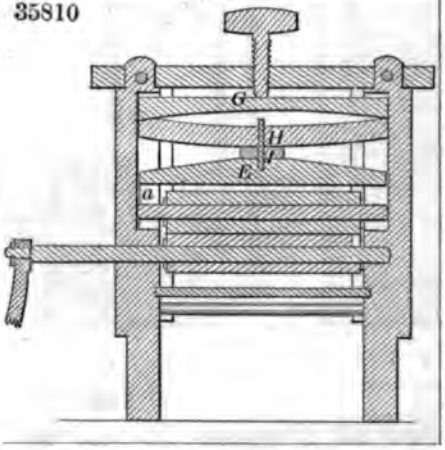

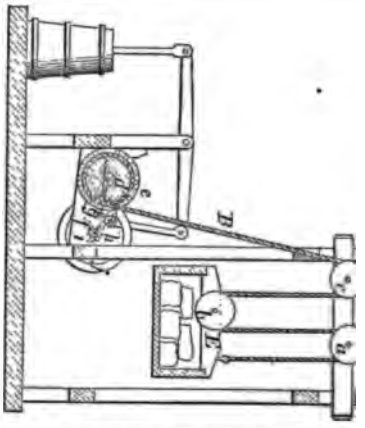

35816

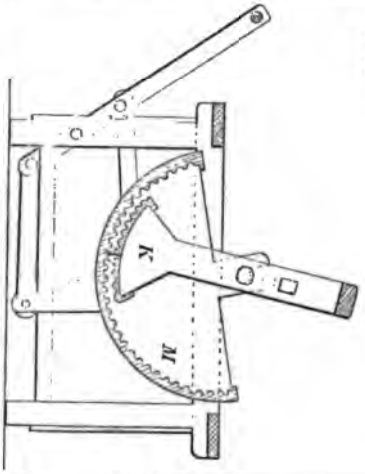

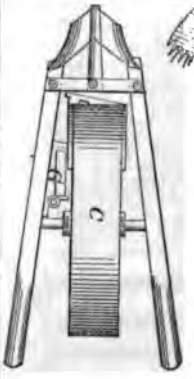

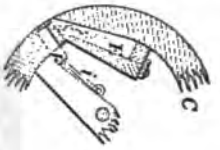

35815

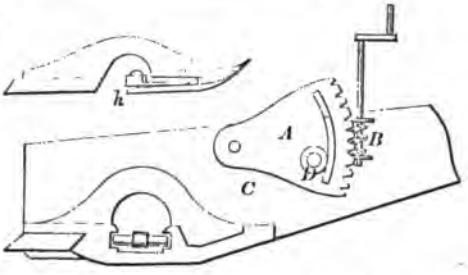

17

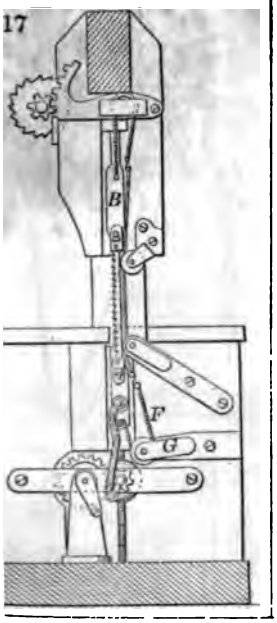

35818

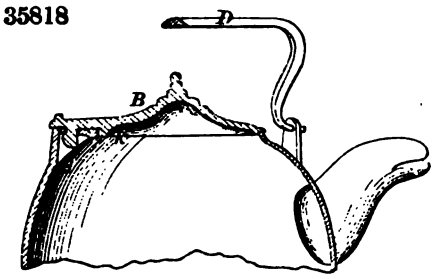

35819

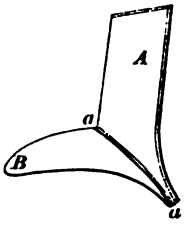

35820

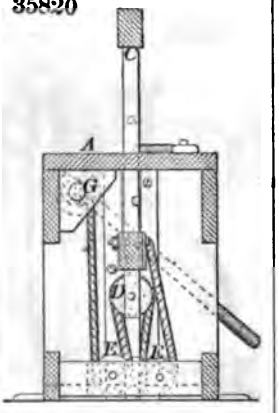

821

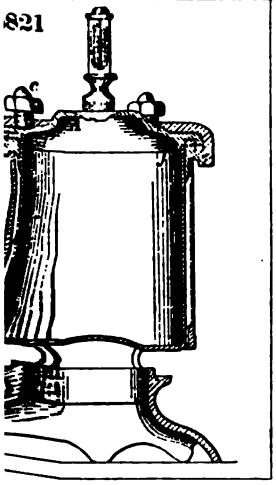

35825

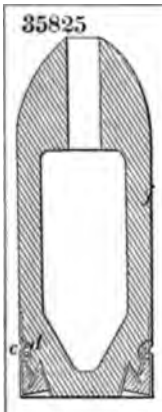

35822

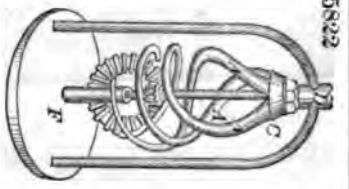

35824

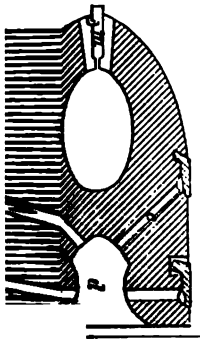

35823

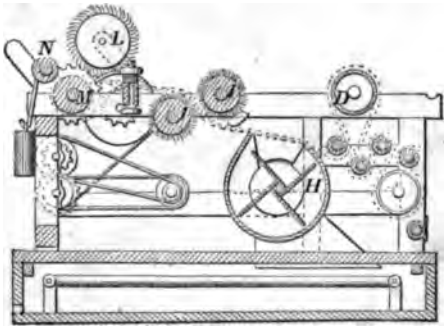

35826

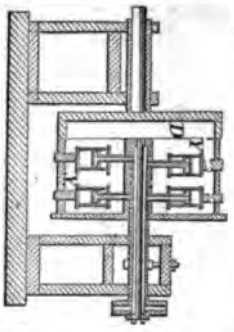

35827

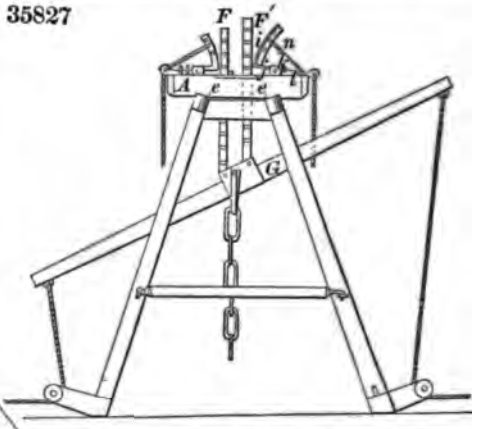

35829

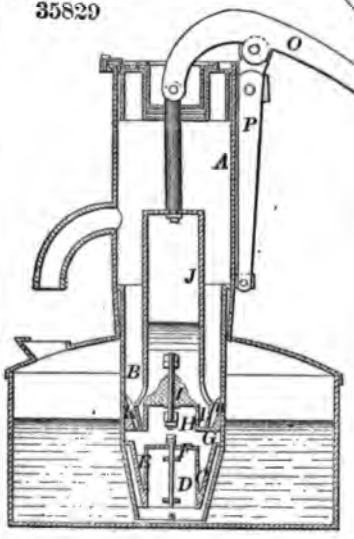

35831

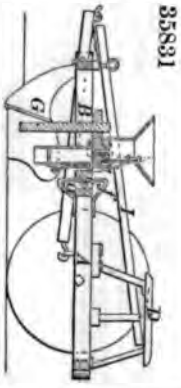

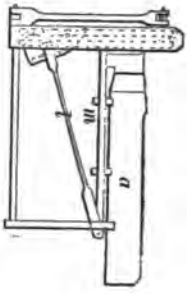

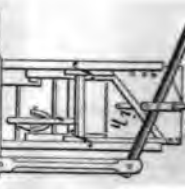

35830

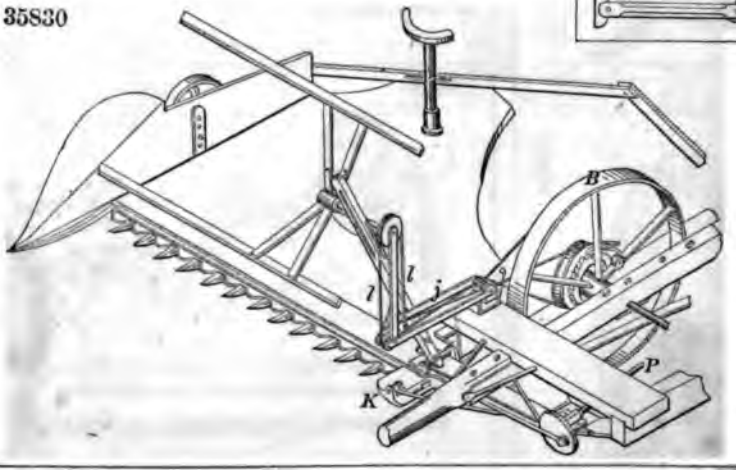

35832

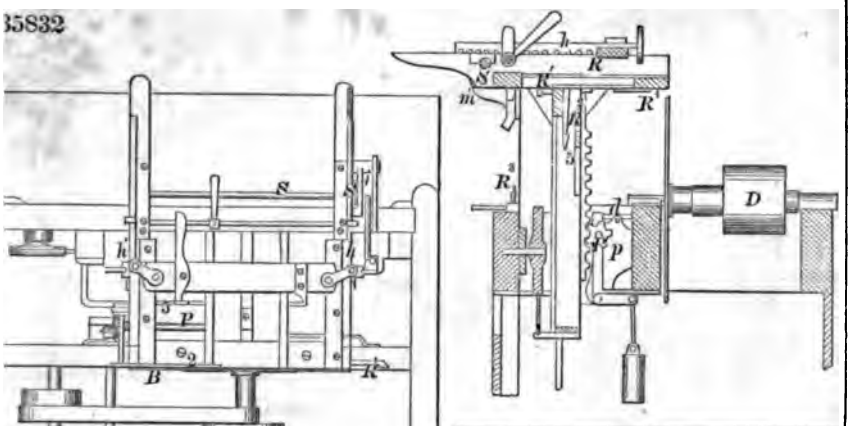

35833

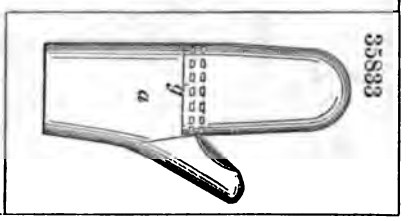

35835

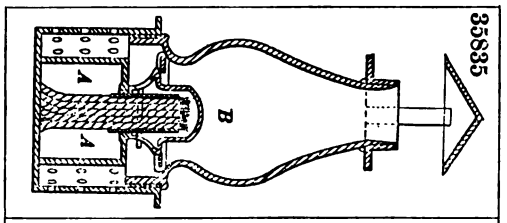

35836

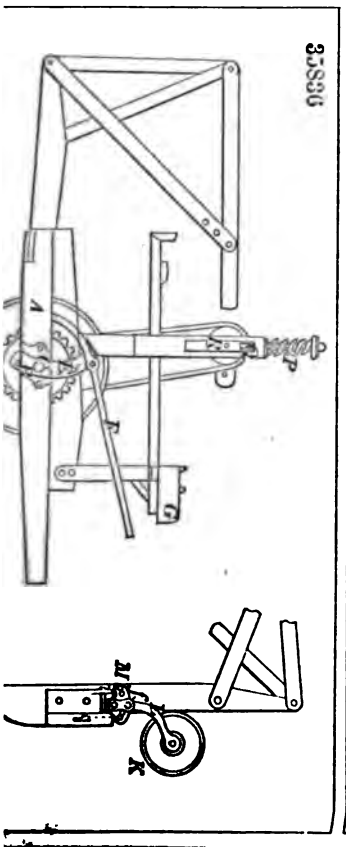

35837

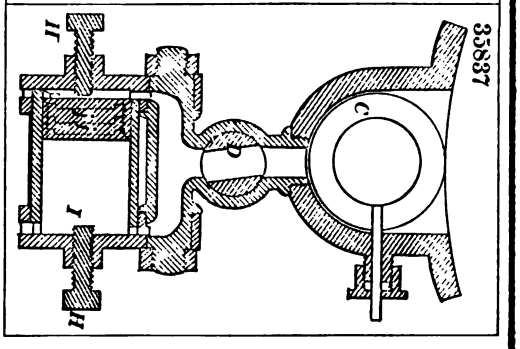

35834

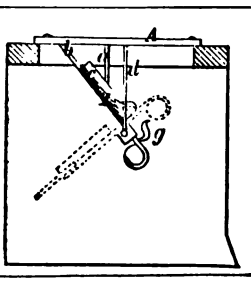

35838

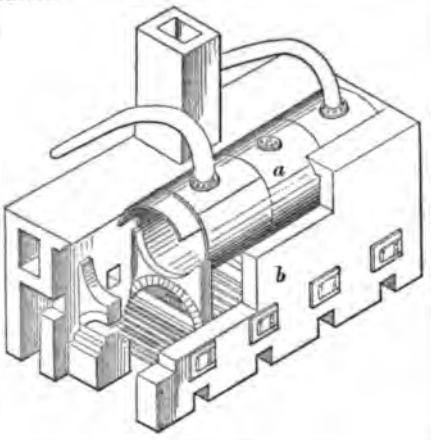

35839

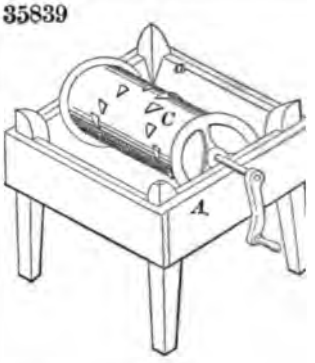

35841

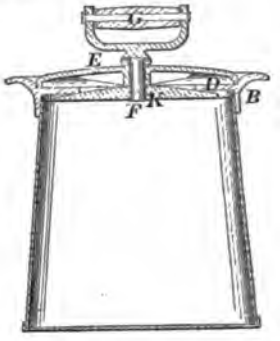

35842

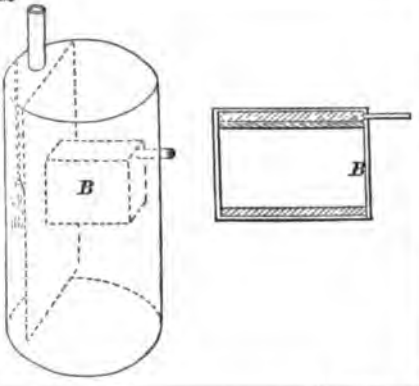

35844

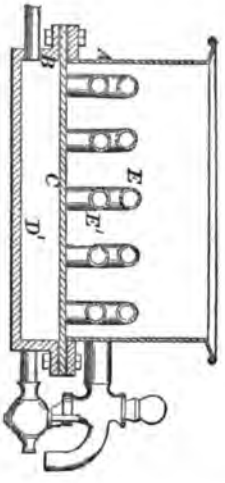

35843

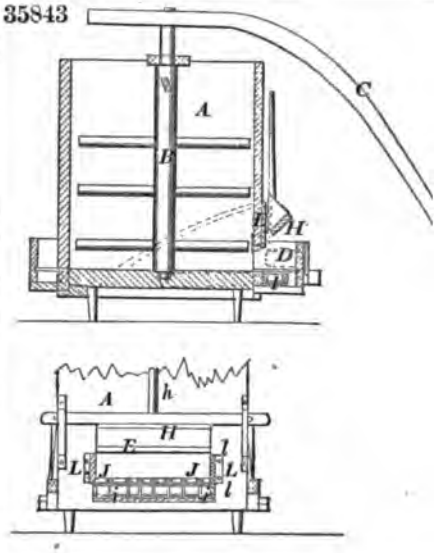

35846

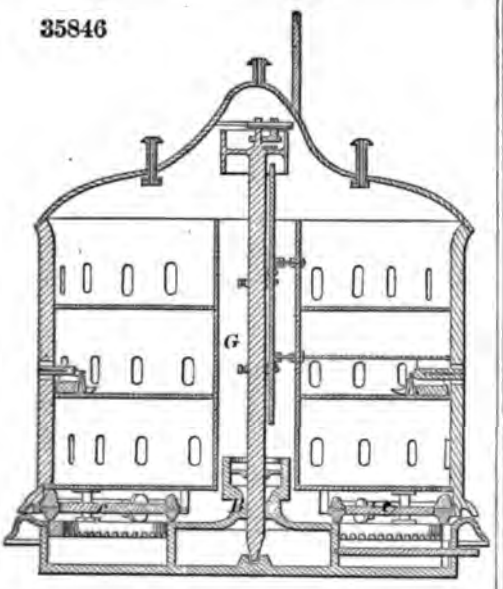

35845

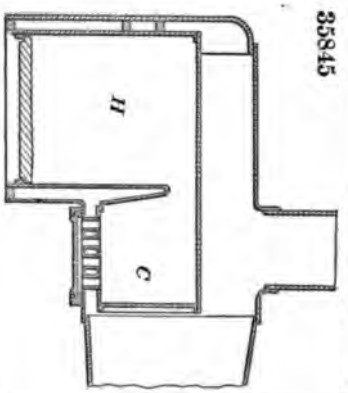

35848

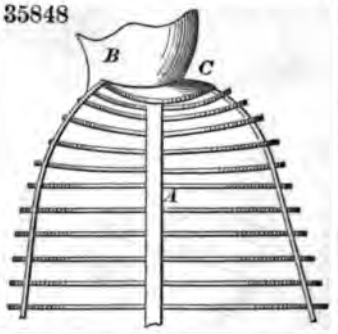

35847

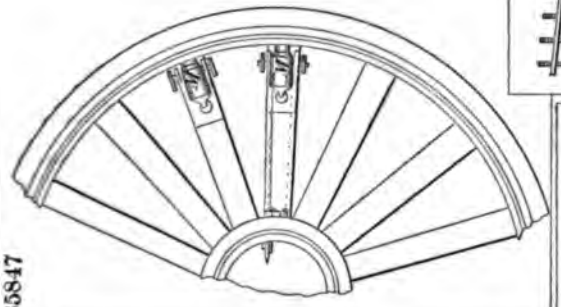

35849

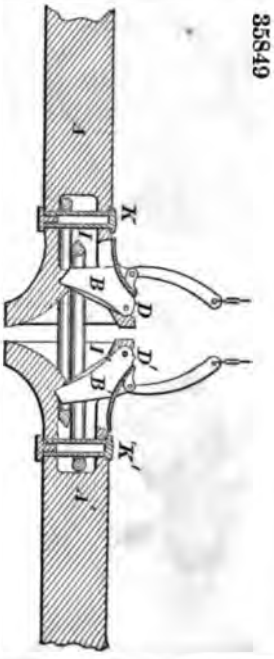

35850

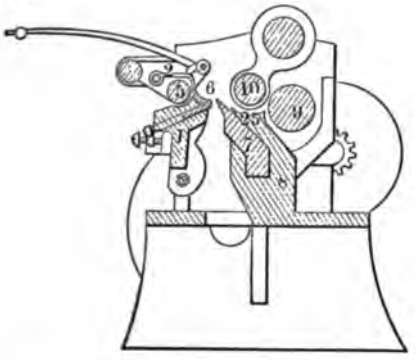

35855

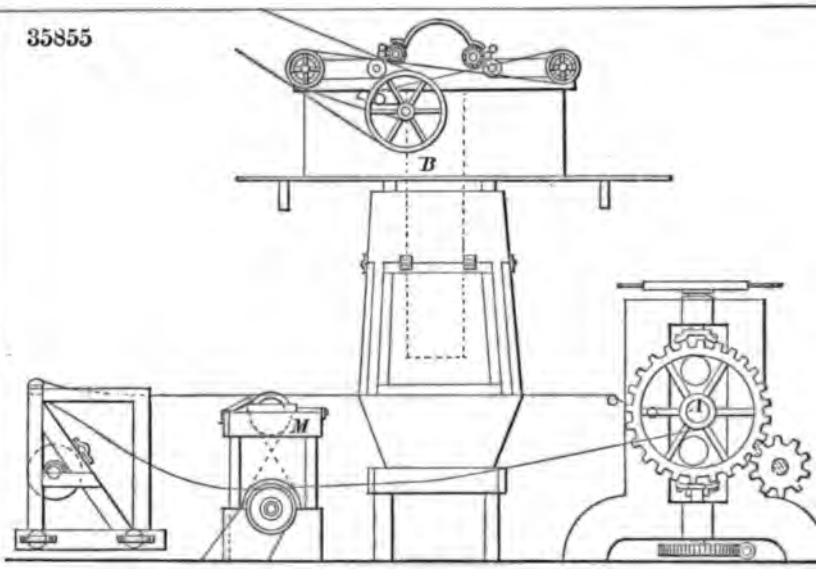

35852

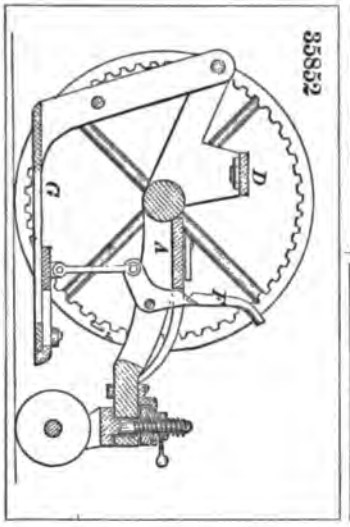

35851

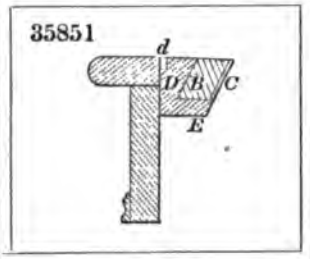

35853

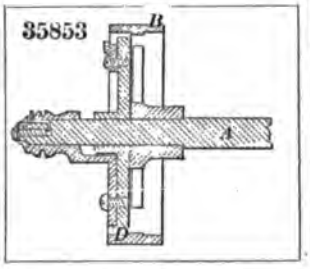

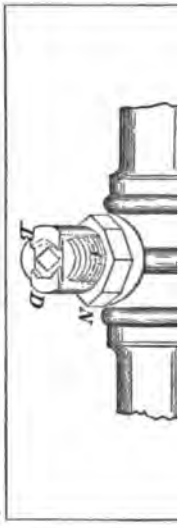

35858

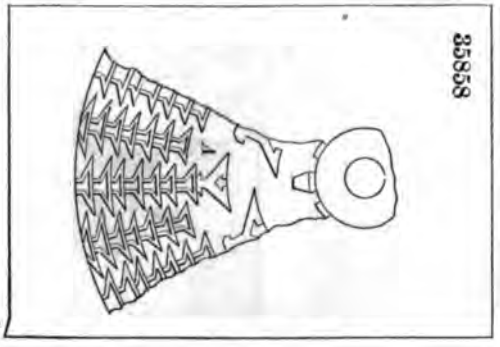

35857

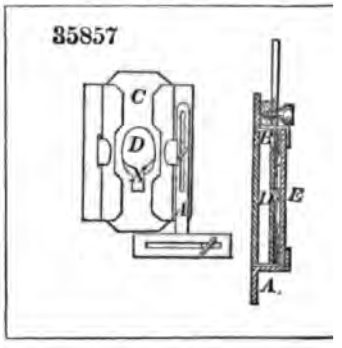

35859

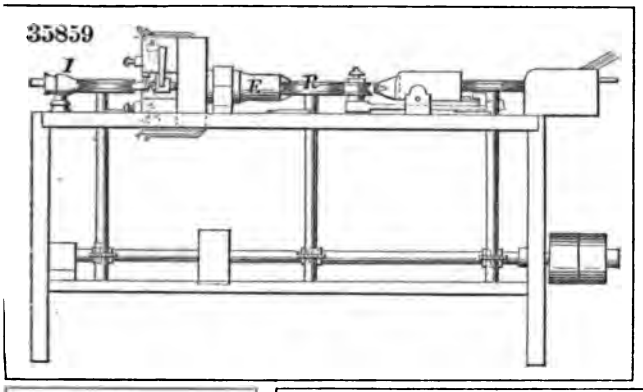

35860

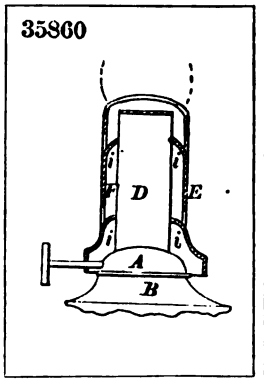

35861

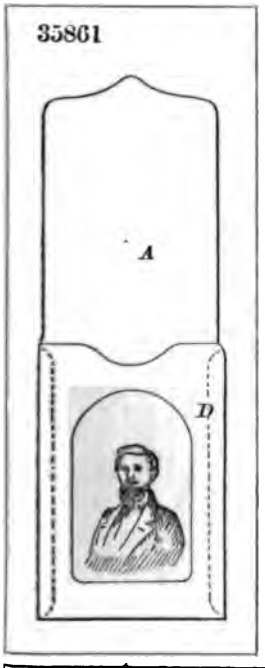

35862

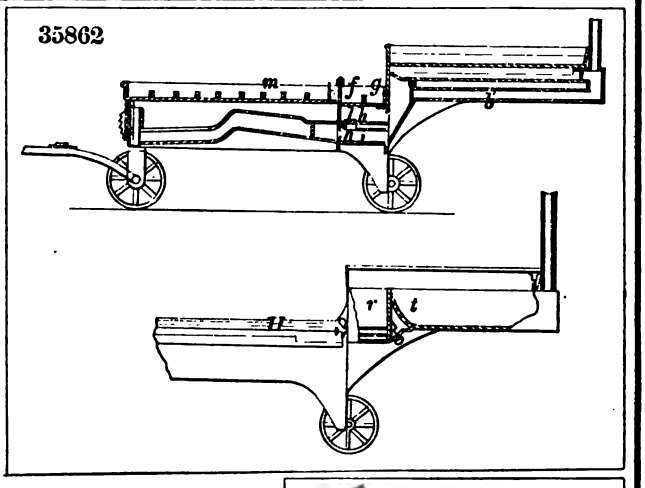

35863

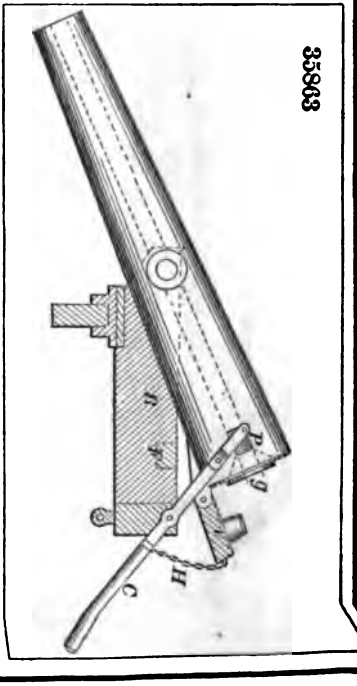

35864

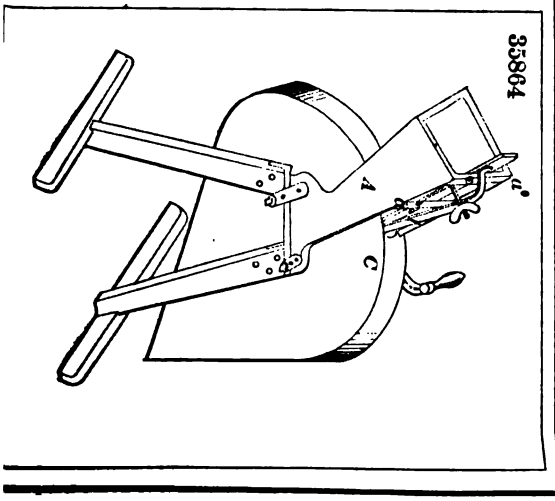

35865

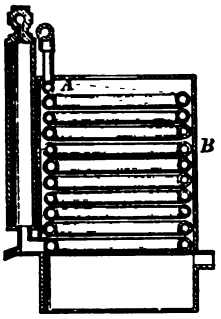

35866

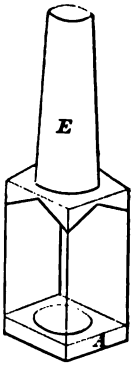

35867

35868

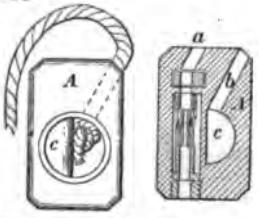

35869

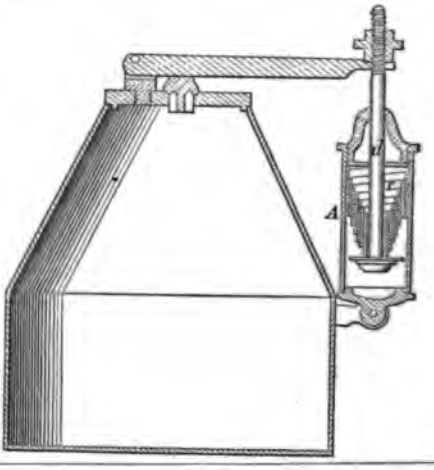

35870

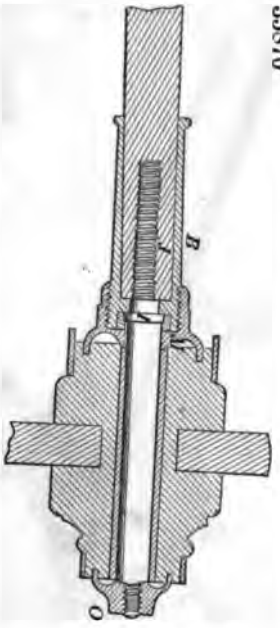

35872

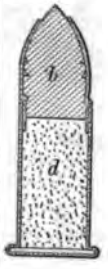

35871

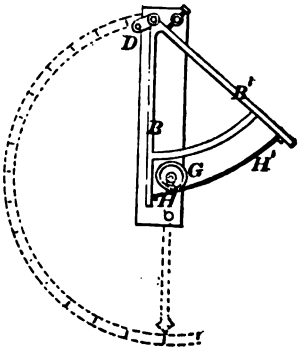

35873

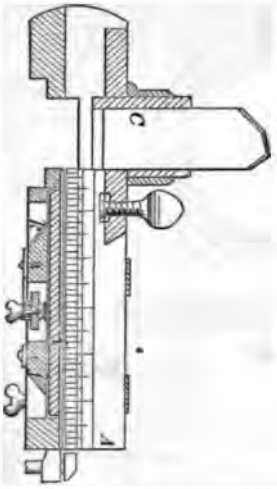

35874

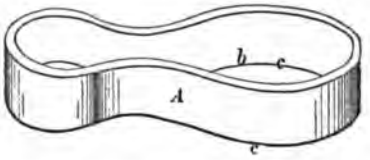

35875

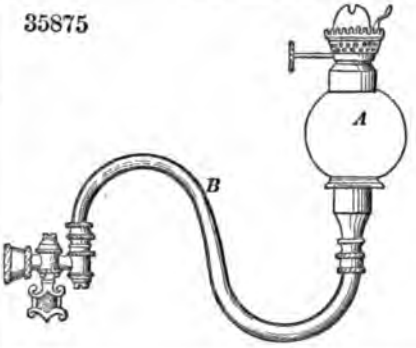

35877

35876

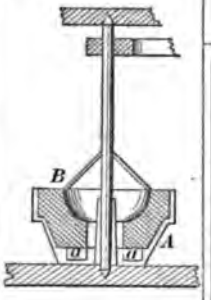

35878

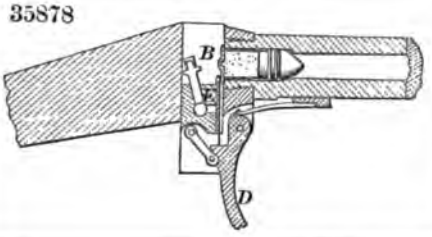

35880

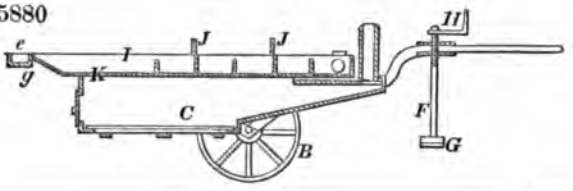

35881

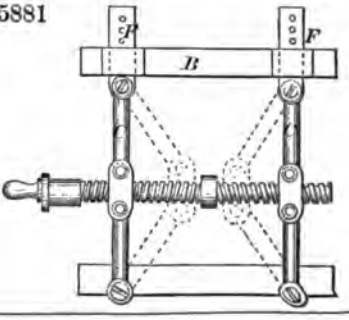

35879

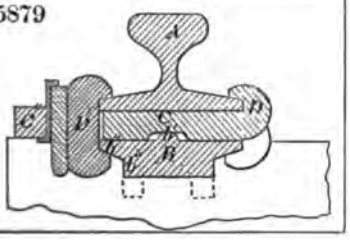

35882

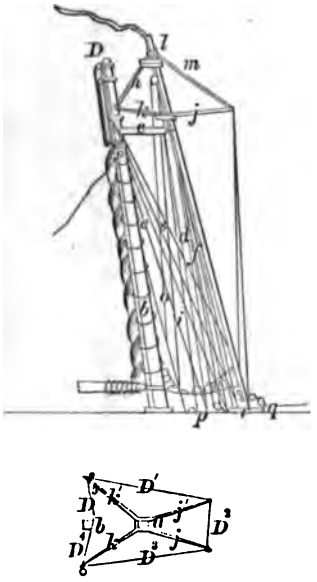

35883

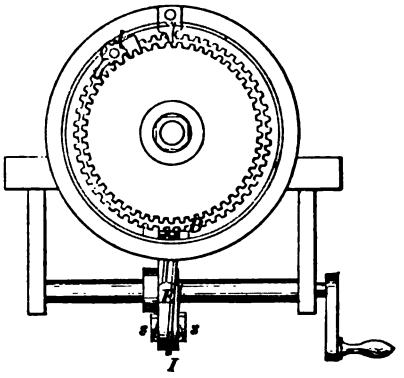

35884

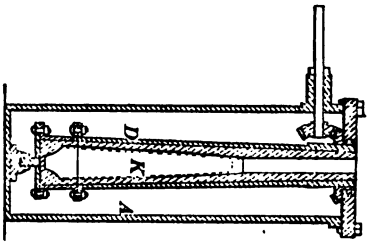

35885

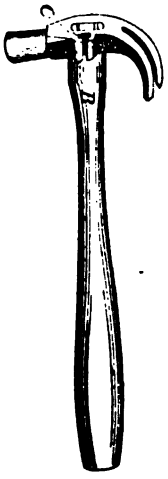

35886

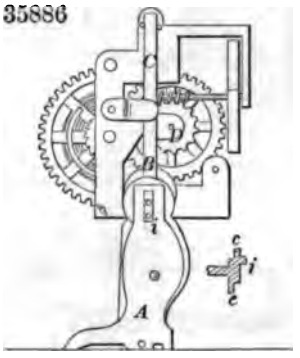

35887

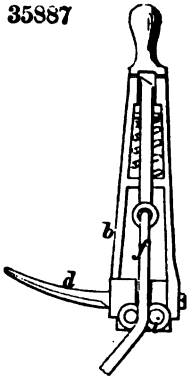

35888

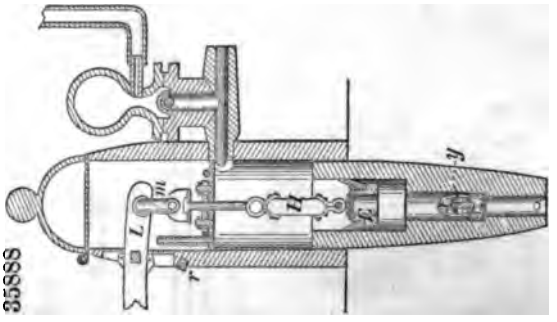

35889

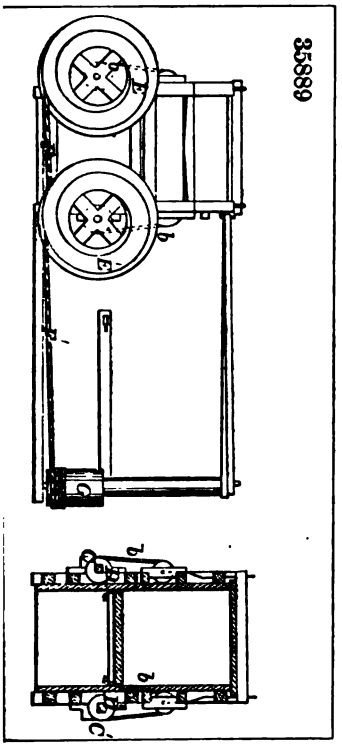

35891

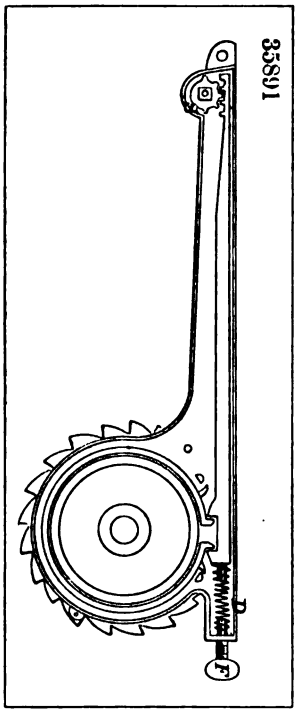

35890

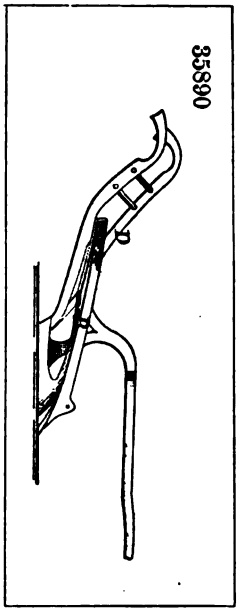

35894

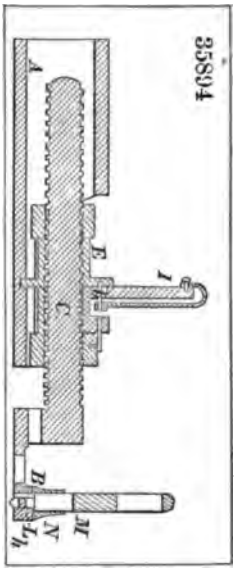

35892

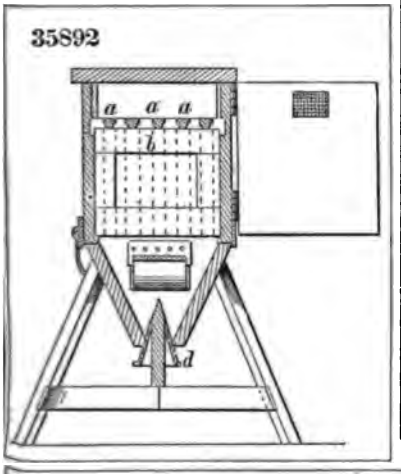

35893

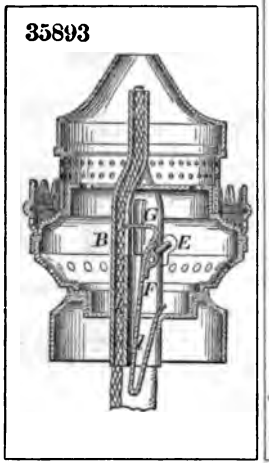

35895

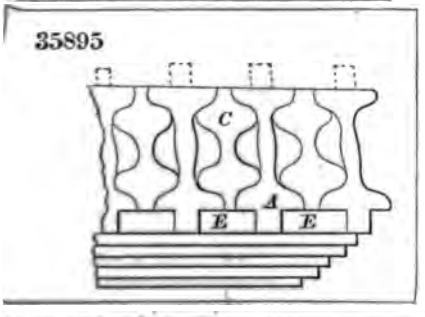

35896

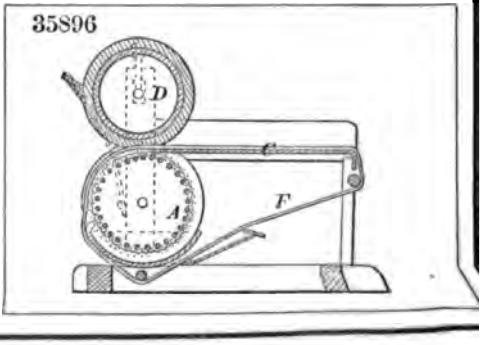

35897

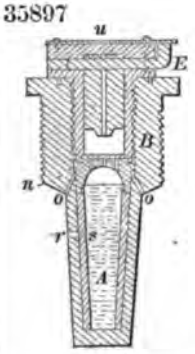

35898

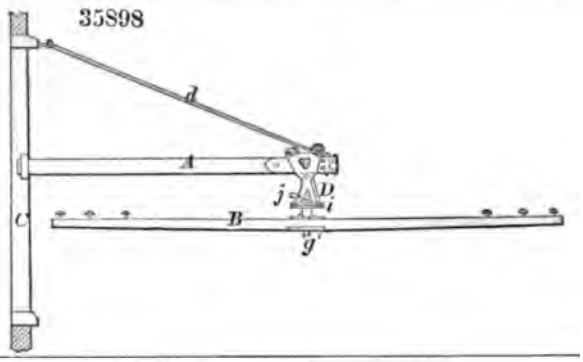

35899

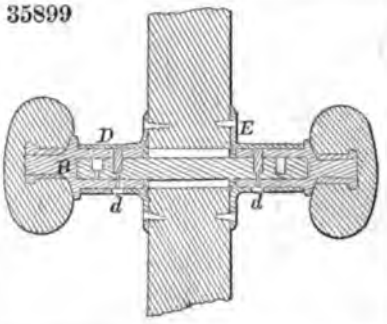

35901

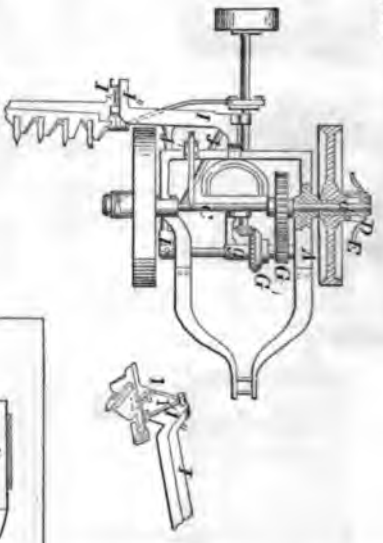

35900

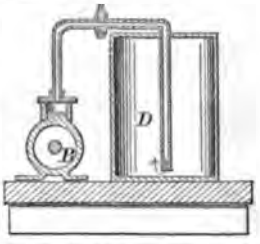

35902

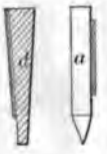

35904

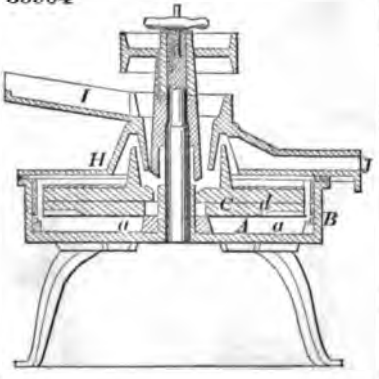

35903

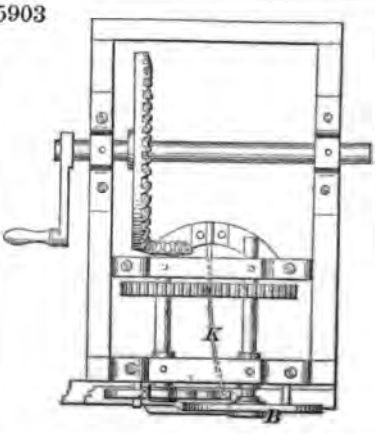

35905

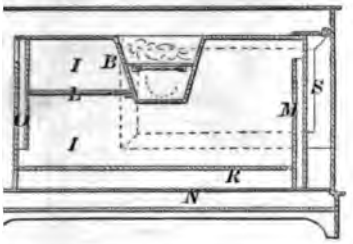

35906

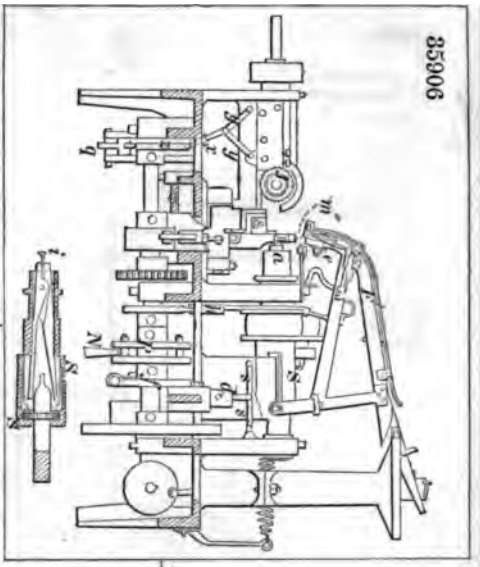

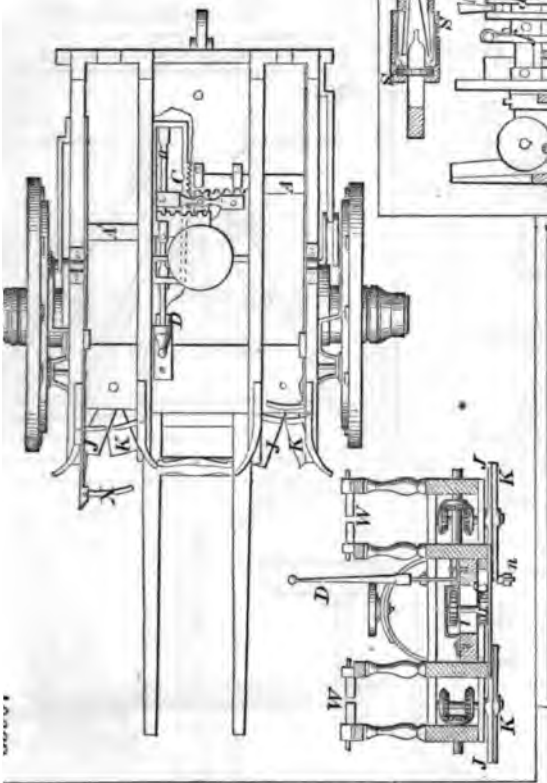

35908

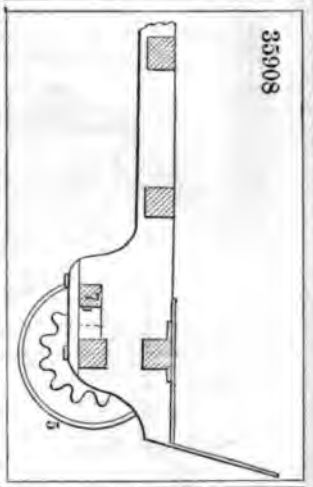

35909

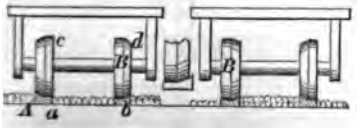

35910

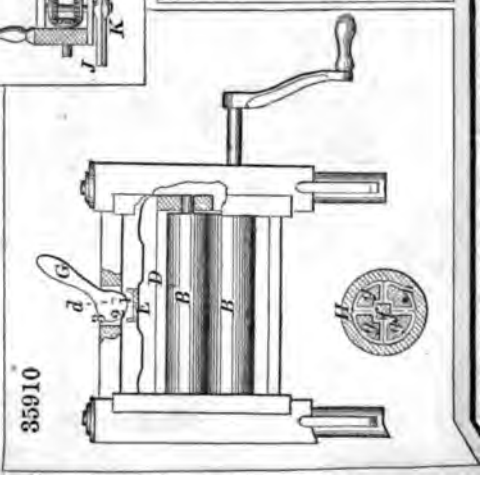

35911

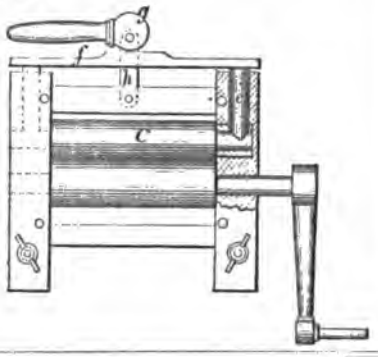

35912

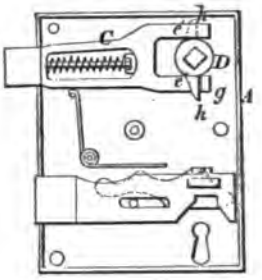

35913

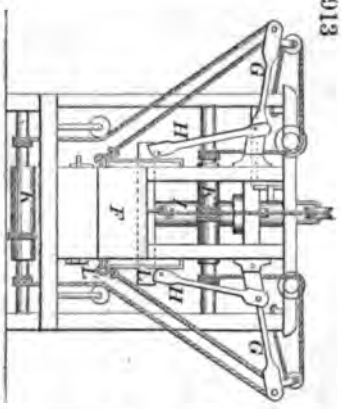

35916

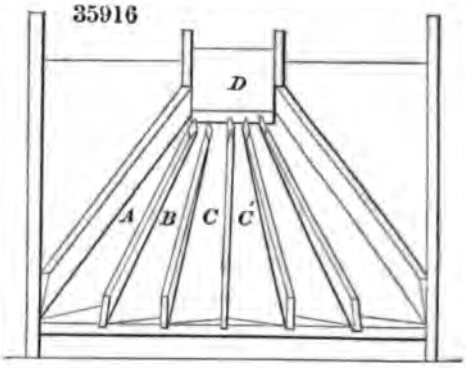

35917

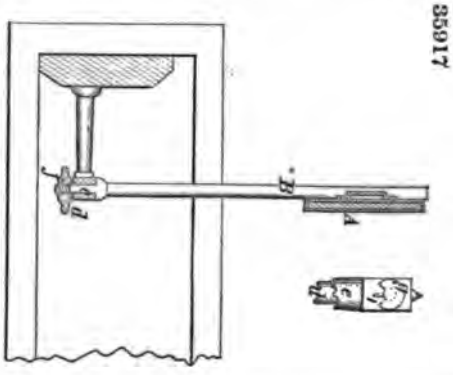

35914

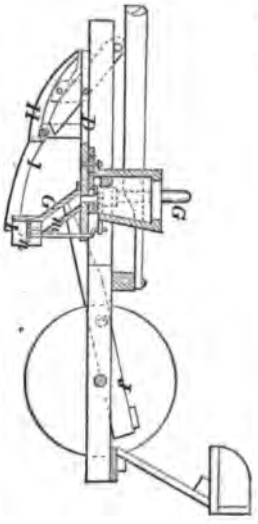

35918

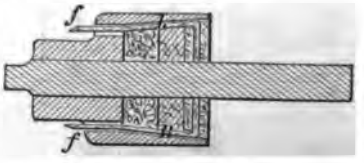

35919

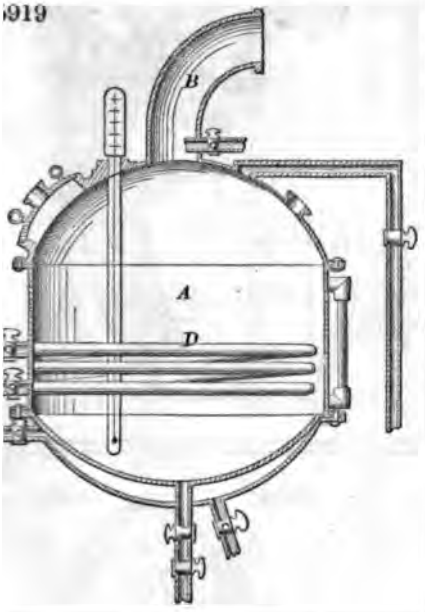

35920

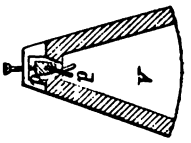

35921

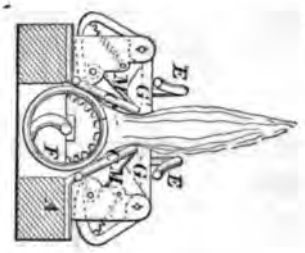

35922

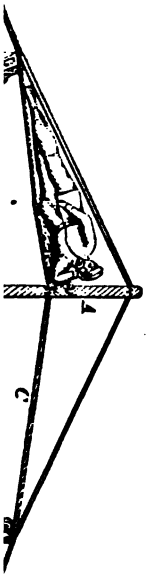

35924

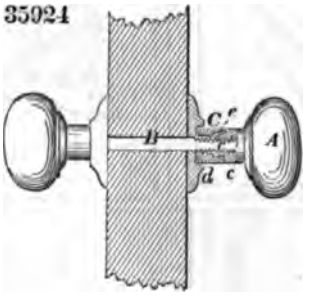

35925

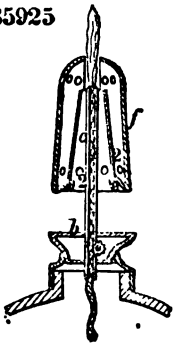

35923

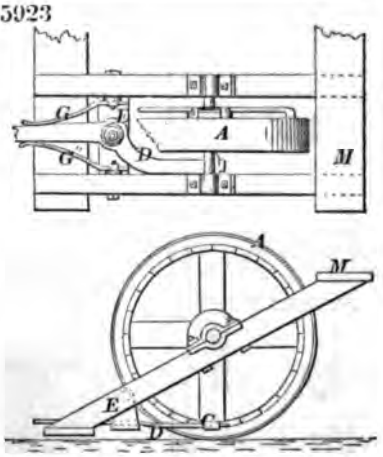

35926

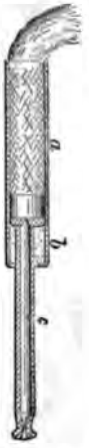

35927

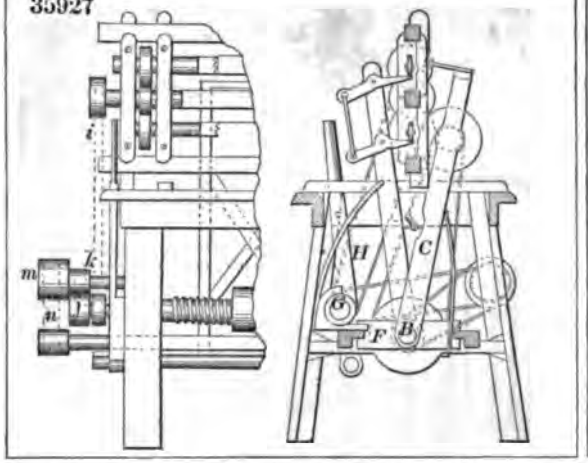

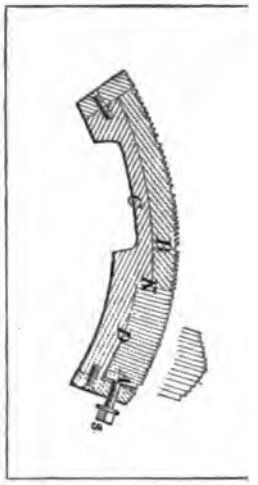

35928

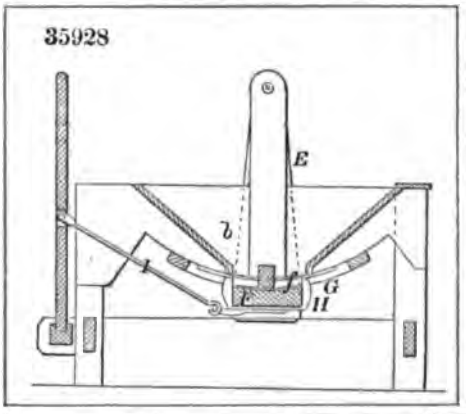

35930

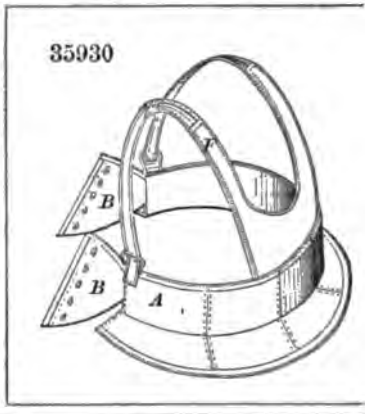

35932

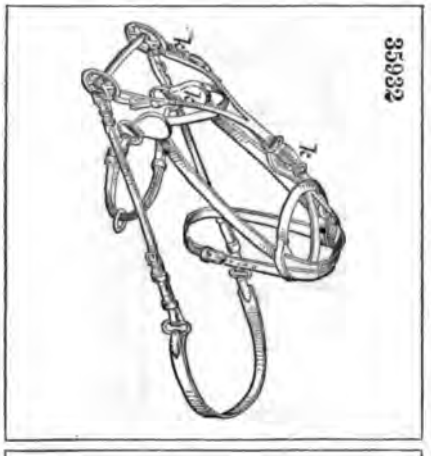

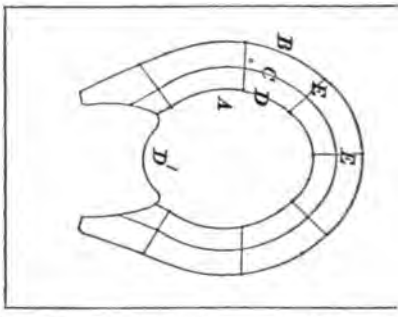

35931

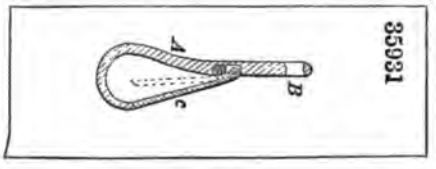

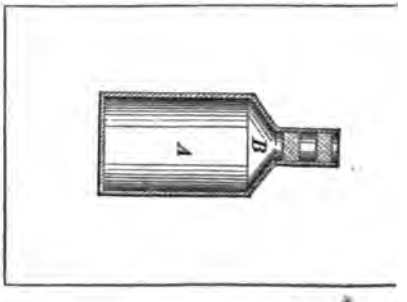

35935

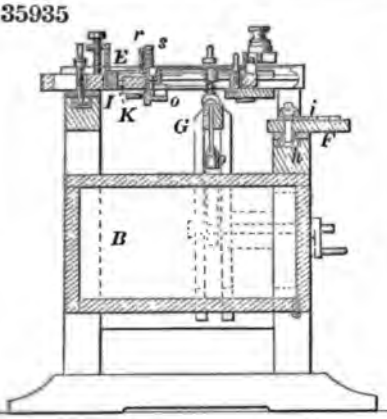

35936

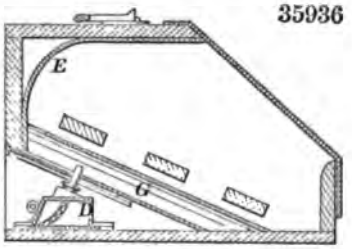

35938

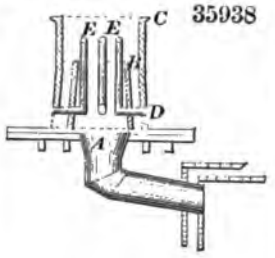

35937

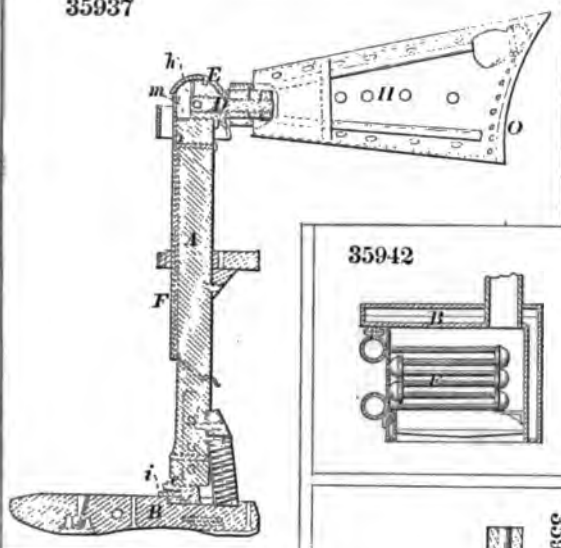

35942

35939

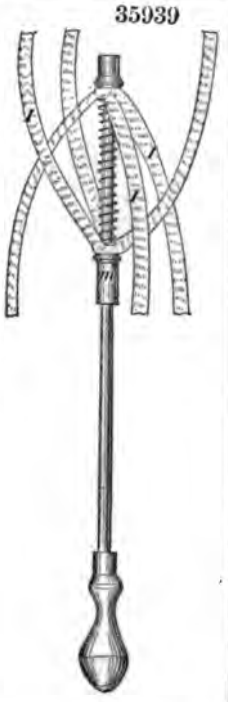

35940

35941

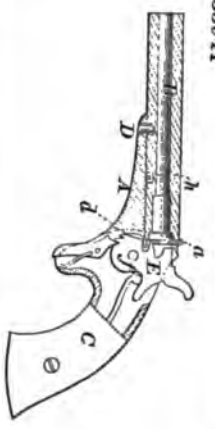

35943

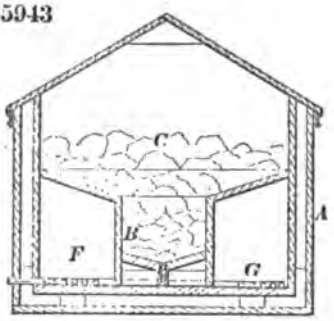

35944

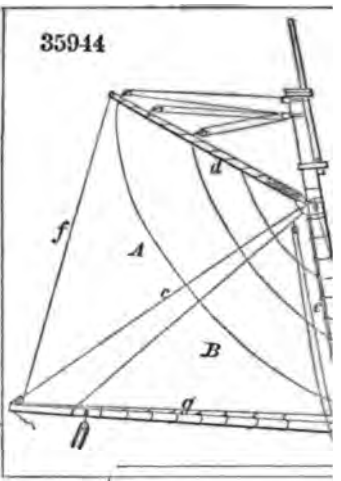

35945

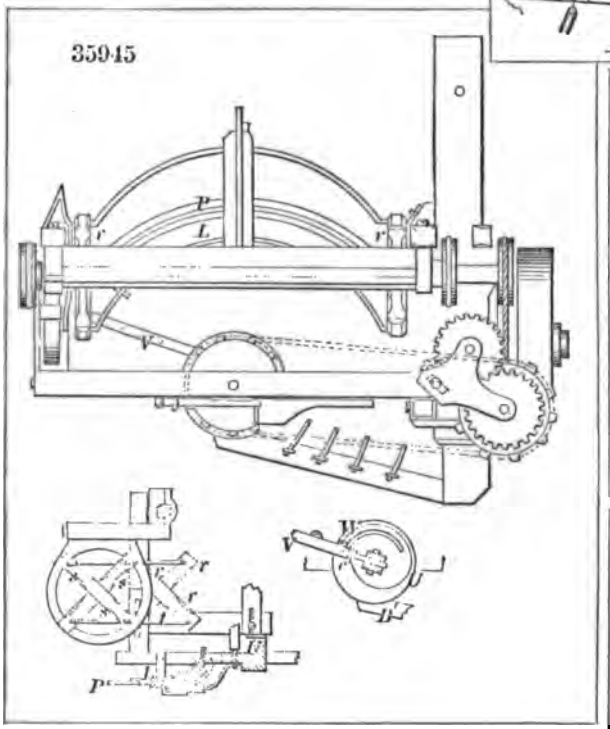

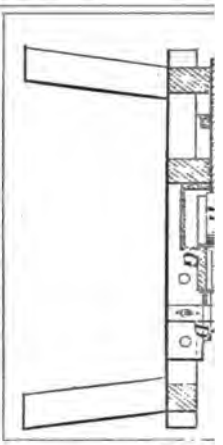

35947

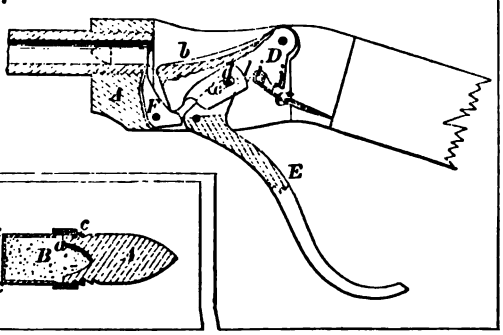

35949

35950

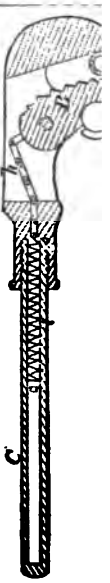

35951

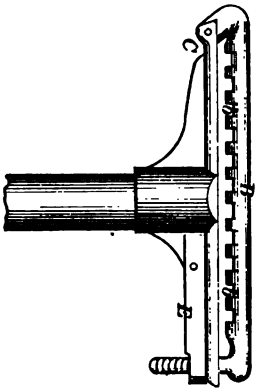

35952

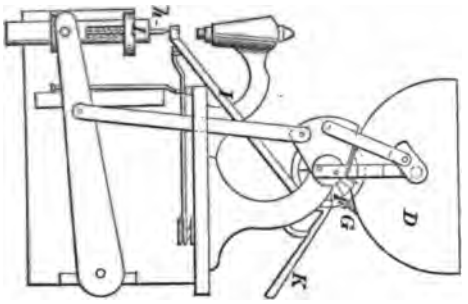

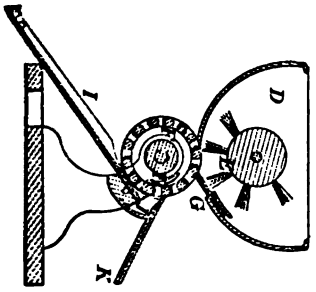

35953

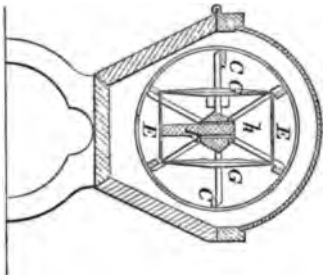

35954

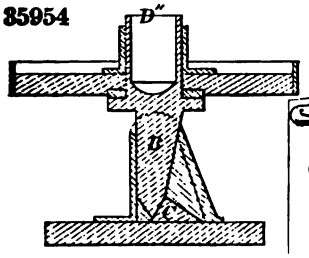

35955

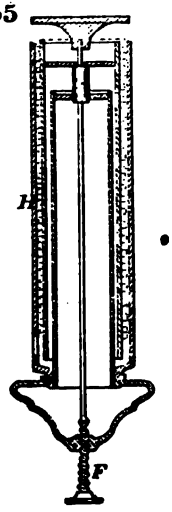

35956

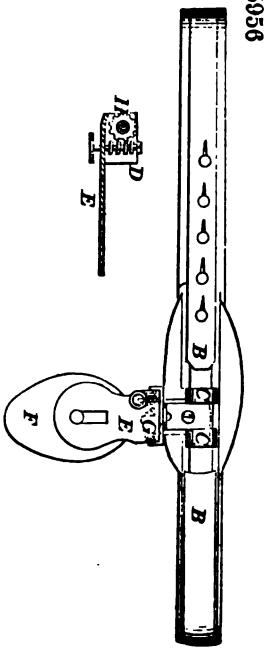

35957

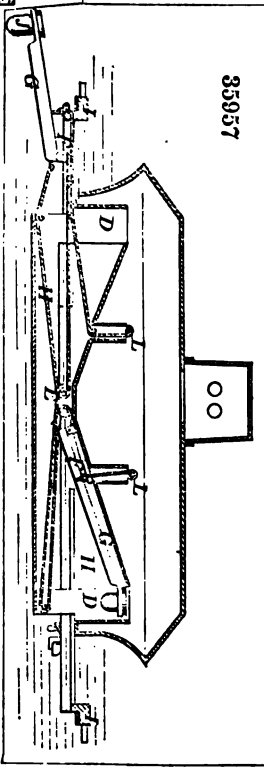

35958

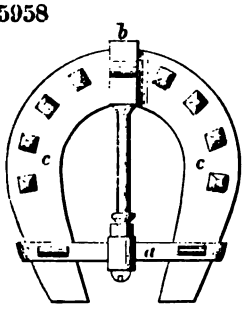

35960

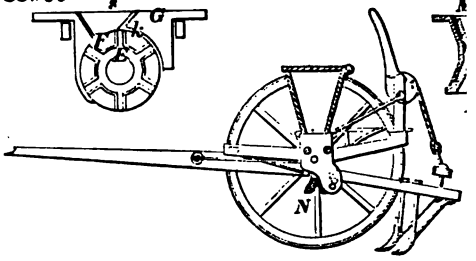

35962

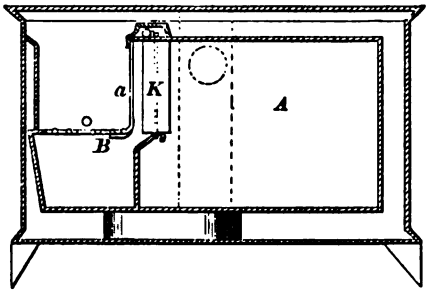

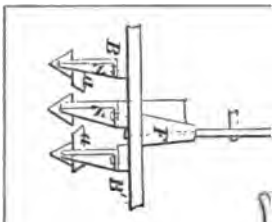

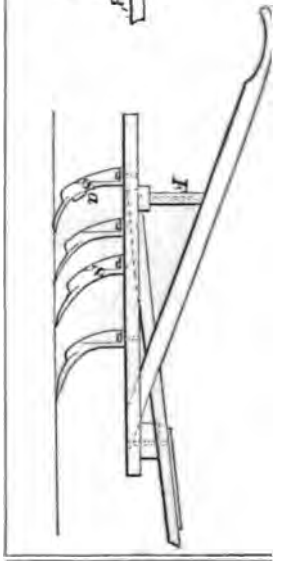

35963

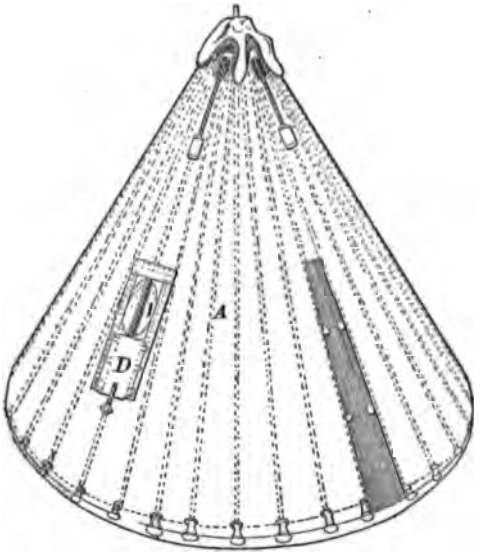

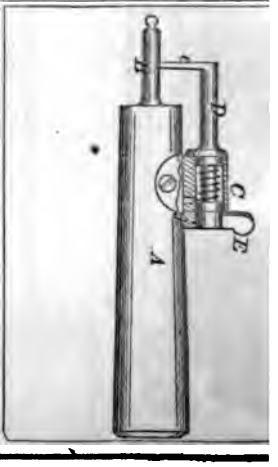

35965

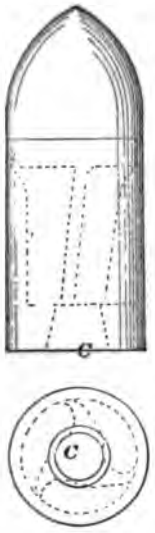

35964

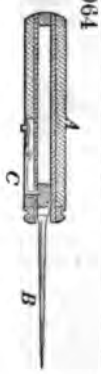

35966

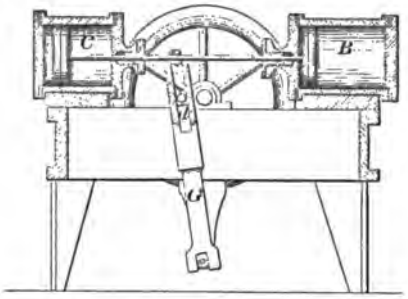

35967

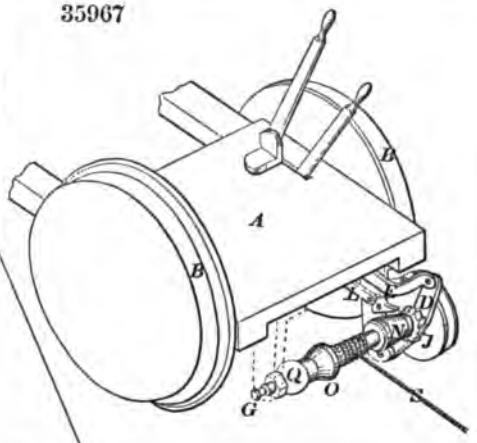

35970

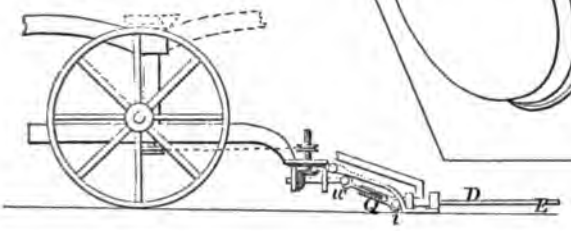

35969

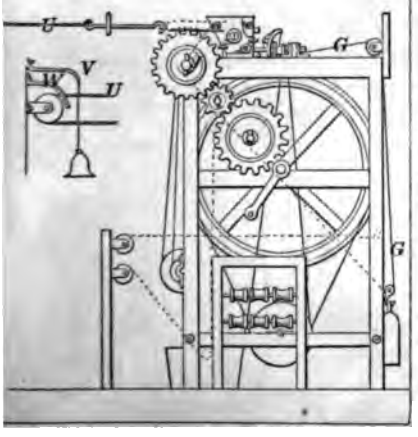

35968

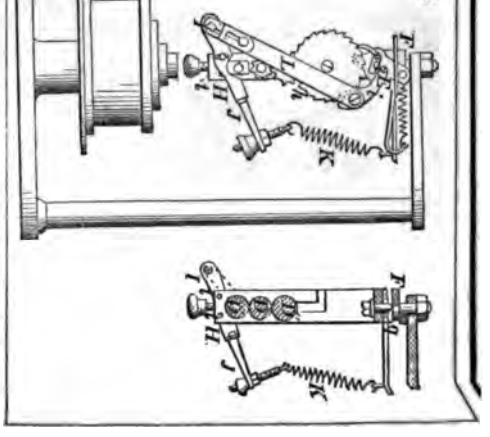

35971

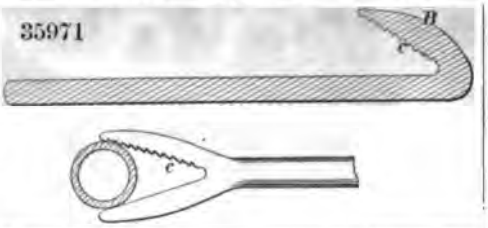

35972

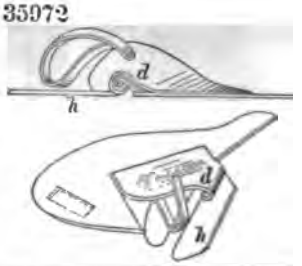

35973

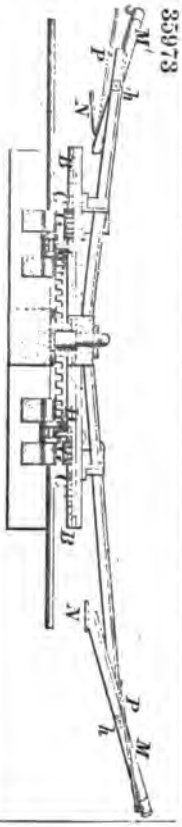

35977

35974

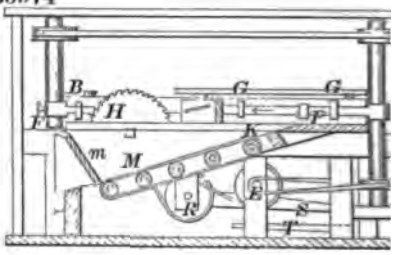

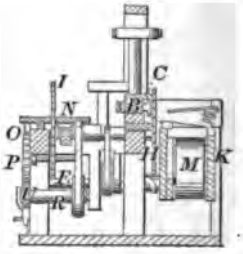

35975

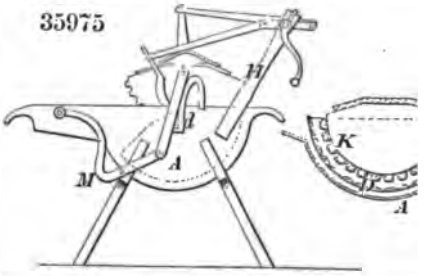

35976

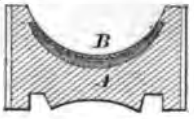

35979

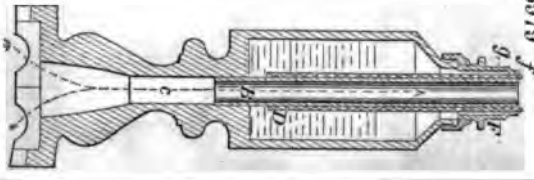

35978

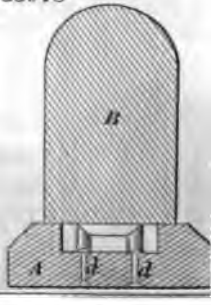

35980

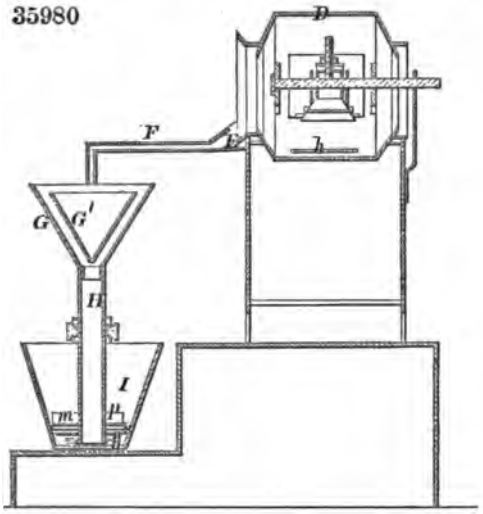

35981

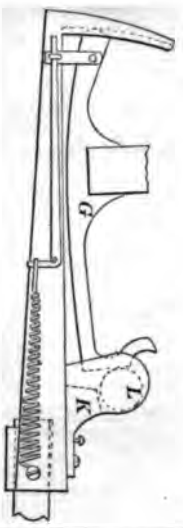

35982

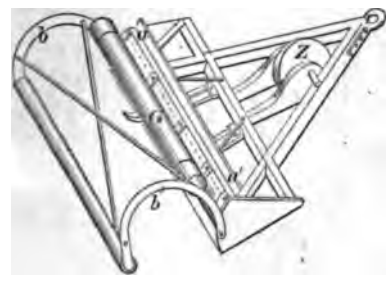

35983

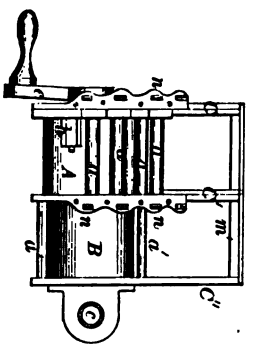

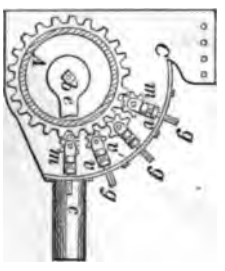

35985

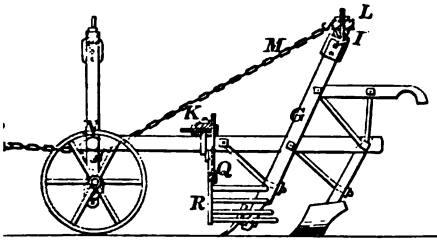

35984

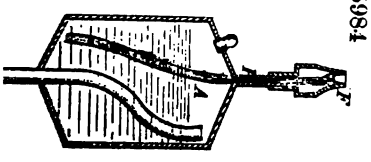

35986

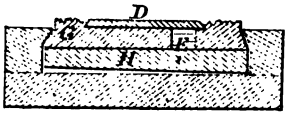

35989

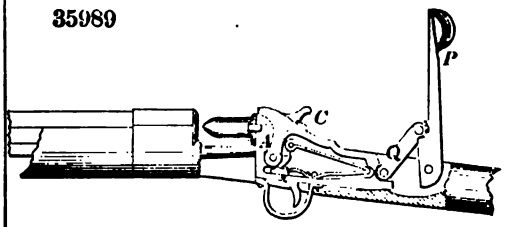

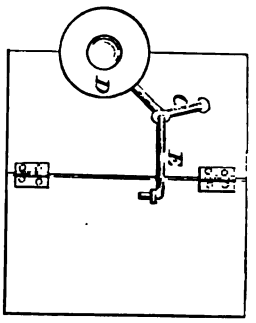

35990

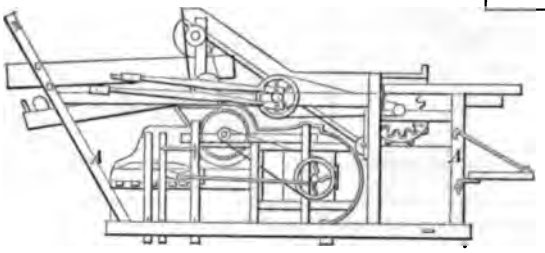

35987

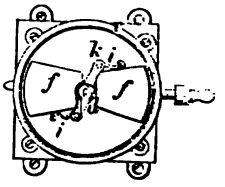

35992

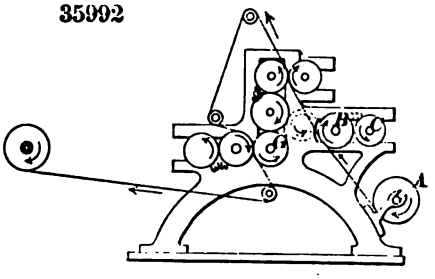

35994

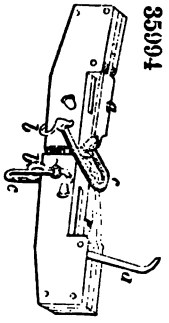

35995

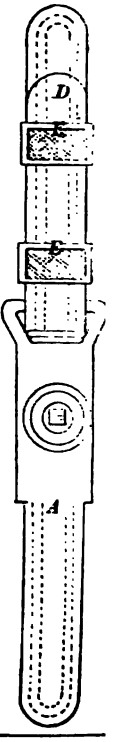

35993

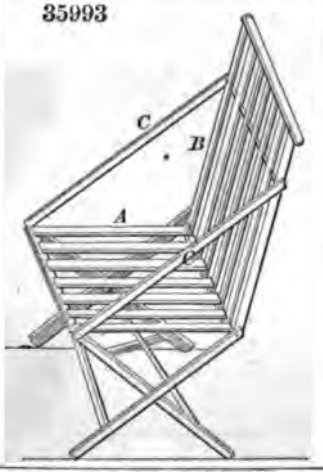

35991

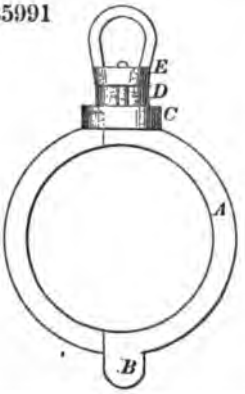

35997

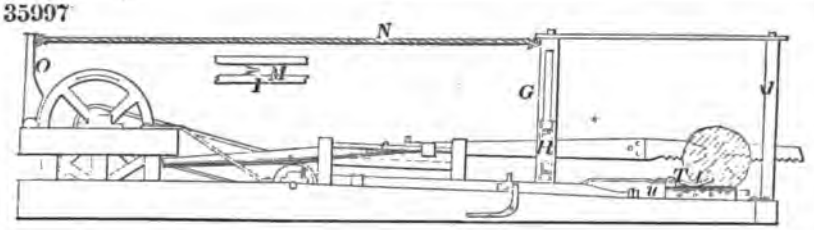

35998

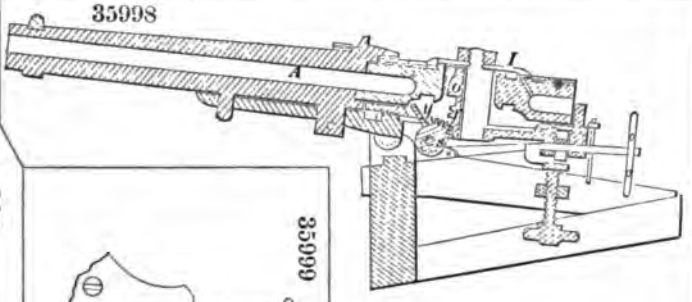

35996

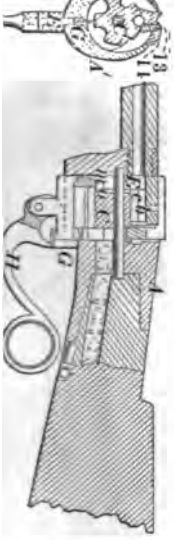

35999

36001

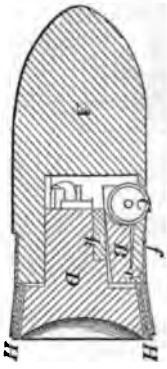

36000

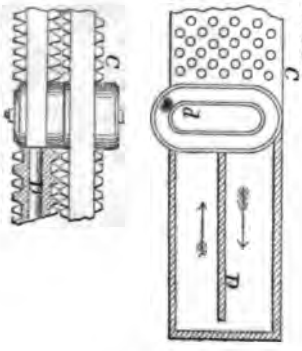

36003

36002

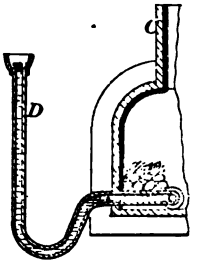

36006

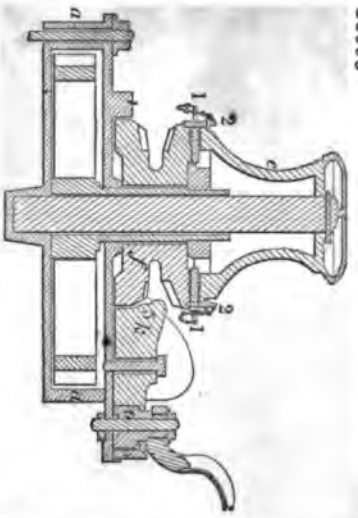

36005

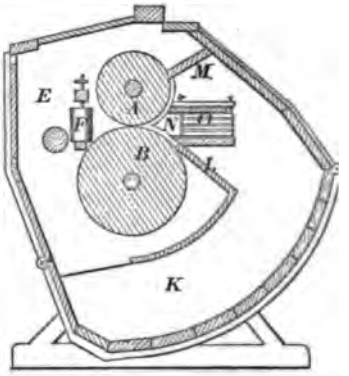

36007

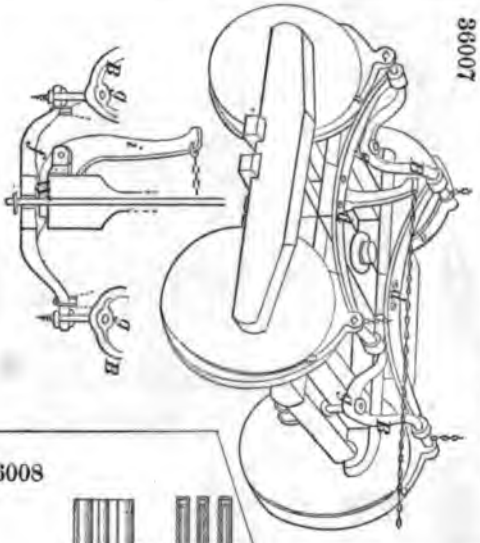

36008

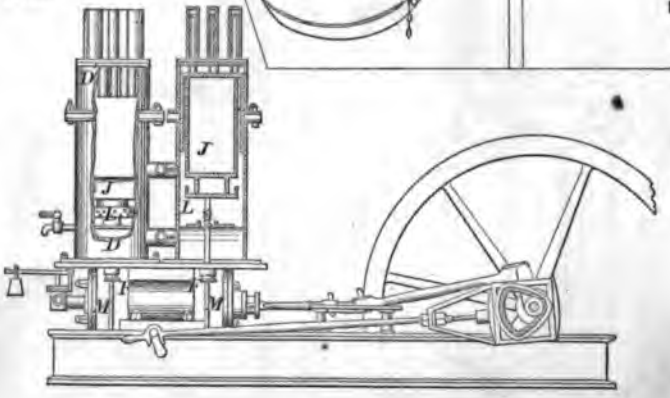

36009

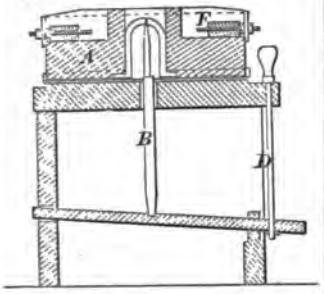

36010

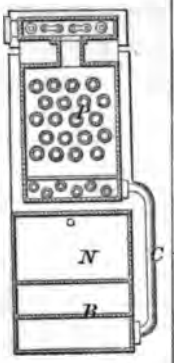

36011

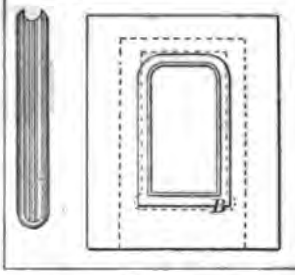

36012

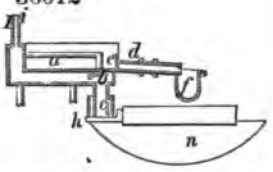

36013

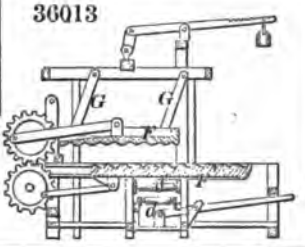

36014

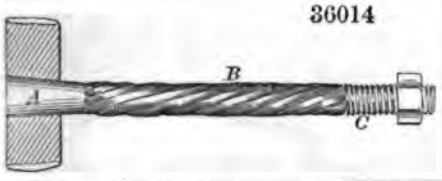

36016

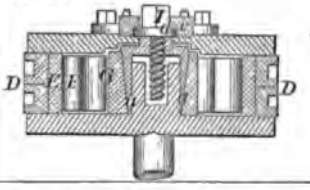

36015

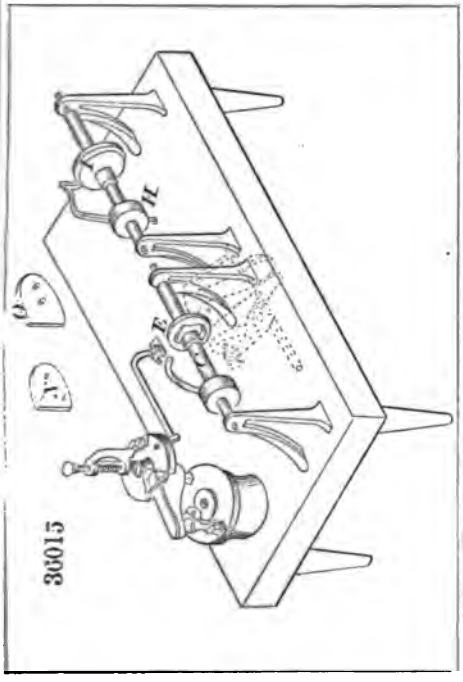

36017

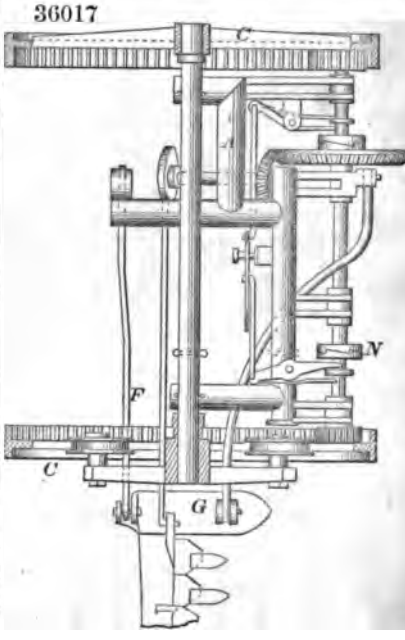

36006

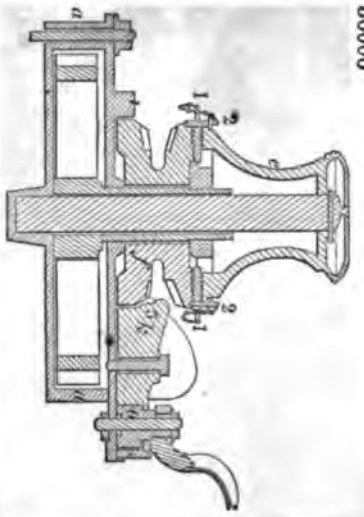

36005

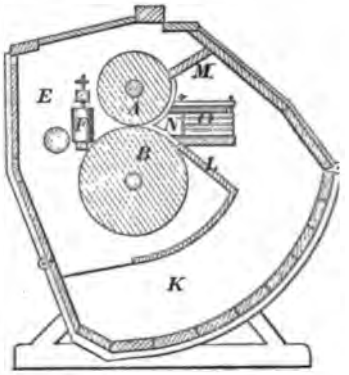

36007

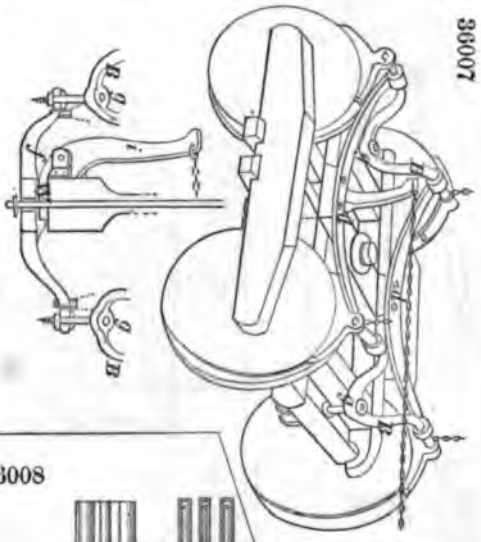

36008

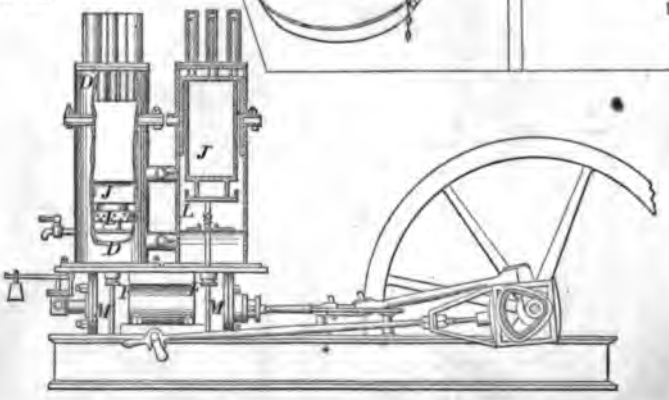

36009

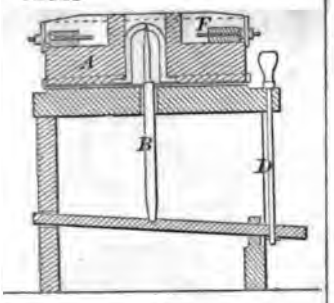

36010

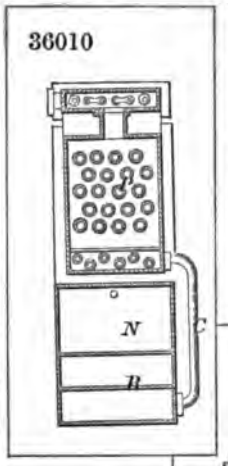

36011

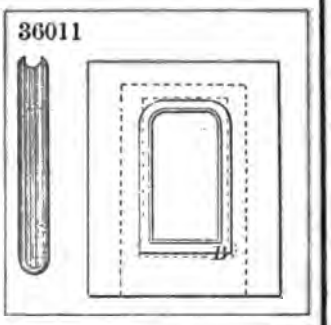

36012

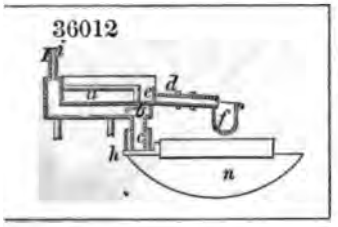

36013

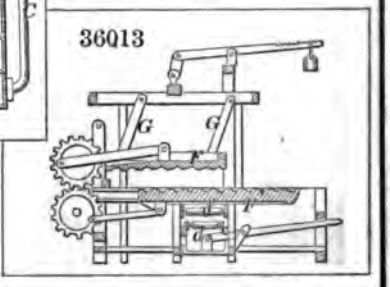

36014

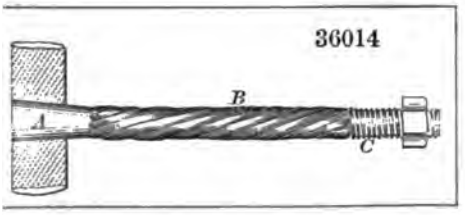

36016

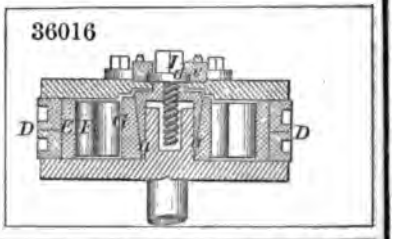

36015

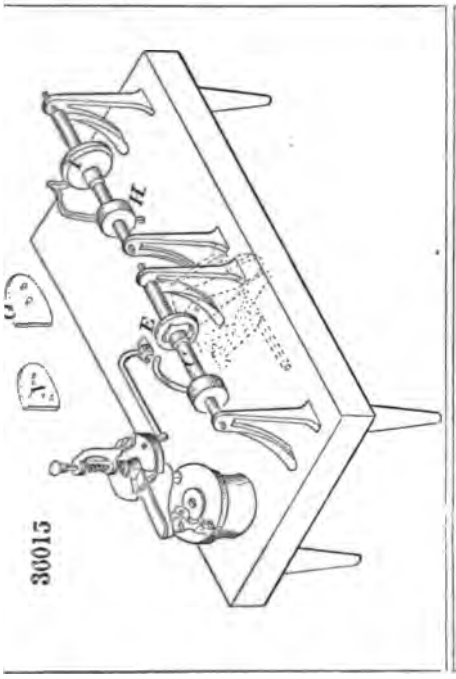

36017

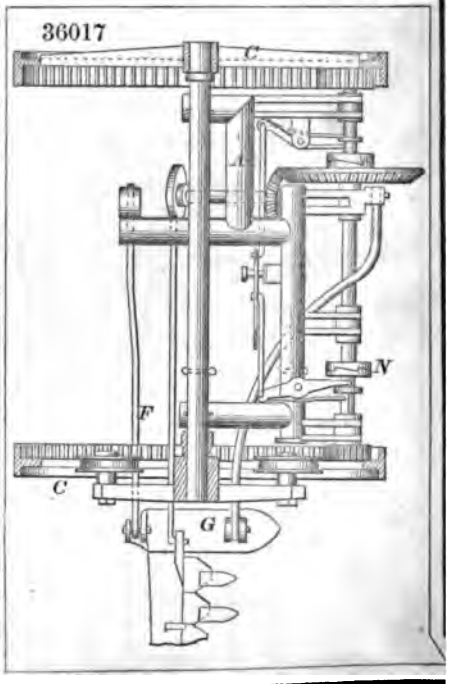

36006

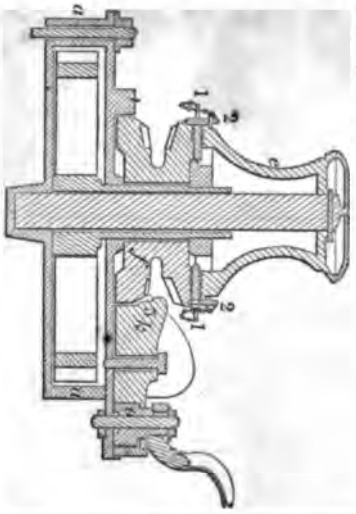

36005

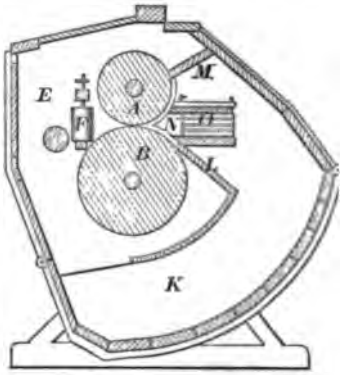

36007

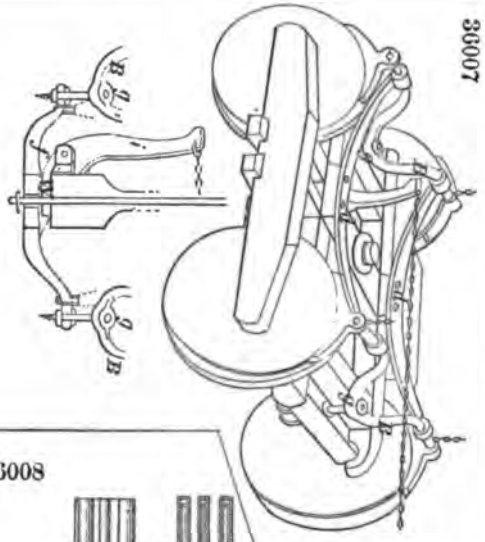

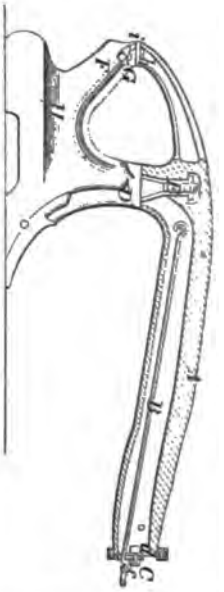

36008

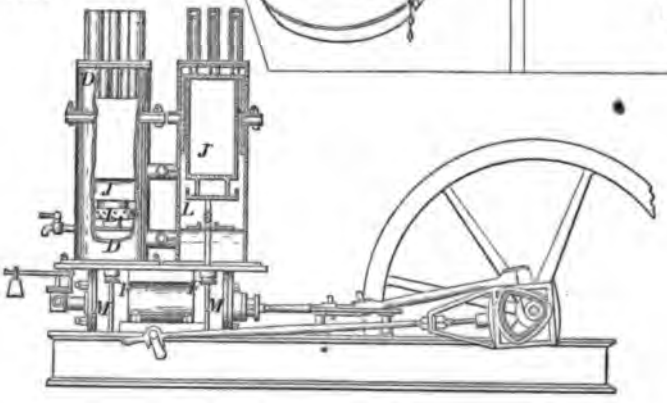

36009

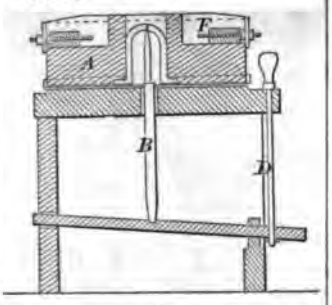

36010

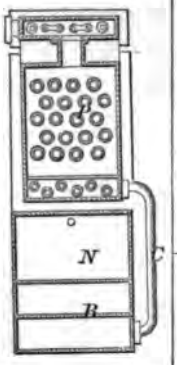

36011

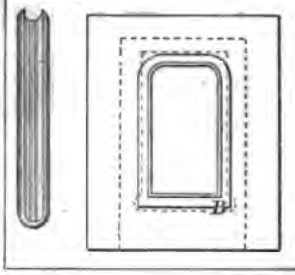

36012

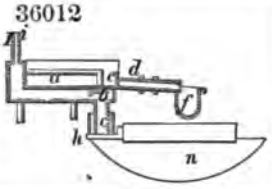

36013

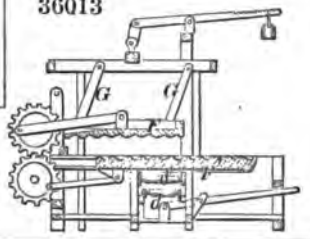

36014

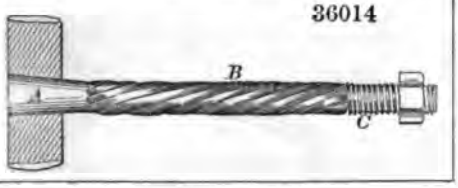

36016

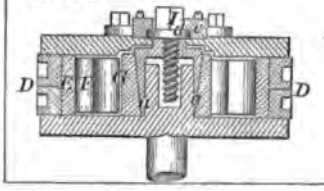

36015

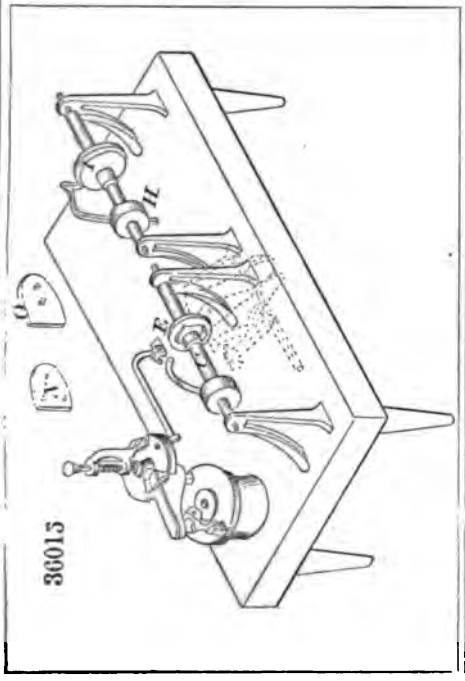

36017

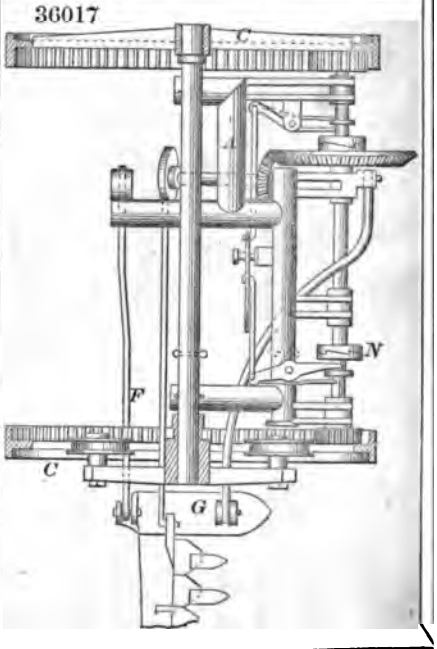

36018

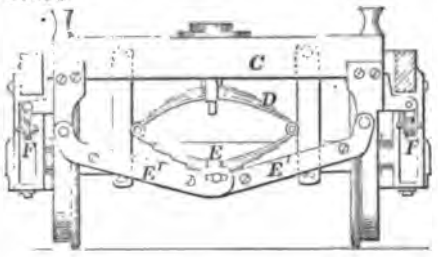

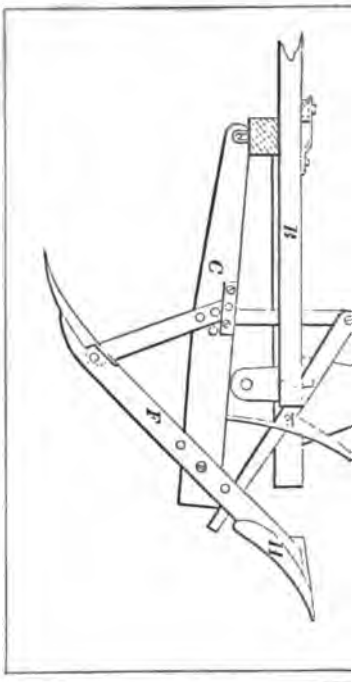

36020

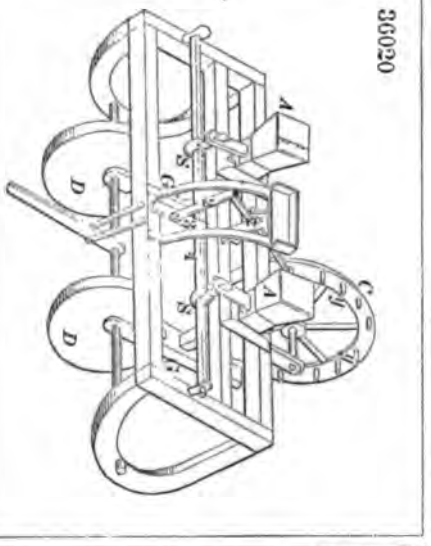

36021

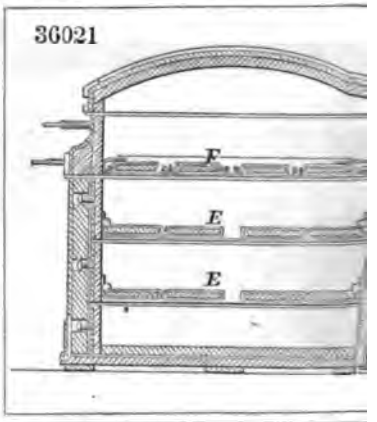

36022

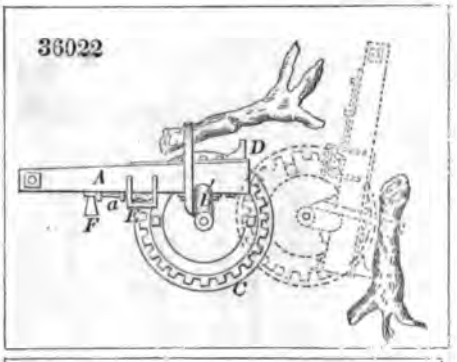

36023

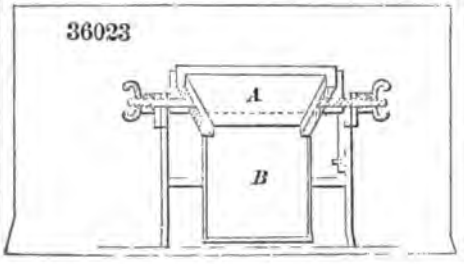

36024

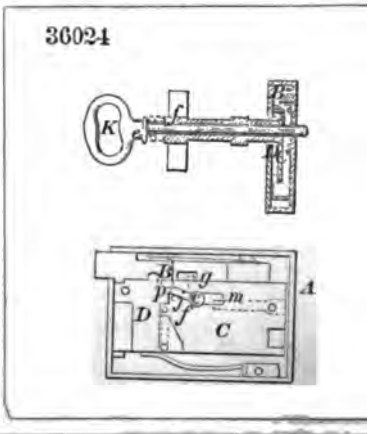

36025

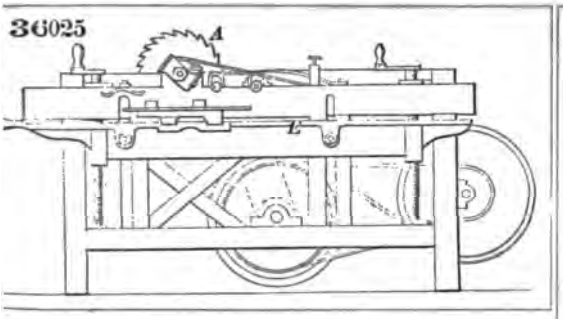

36026

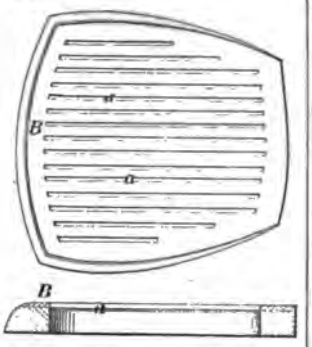

36029

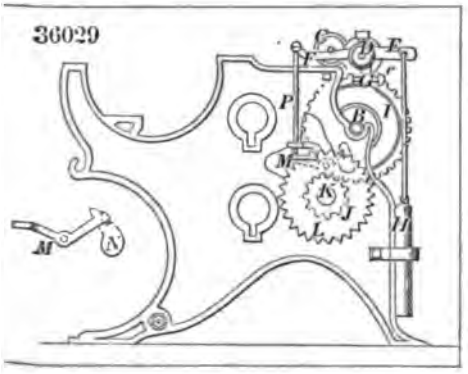

36027

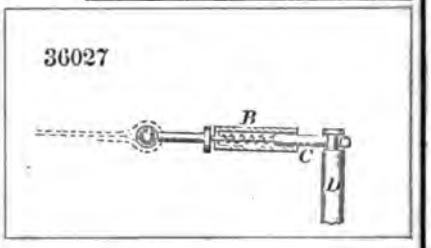

36030

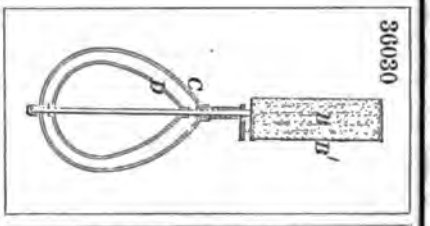

36031

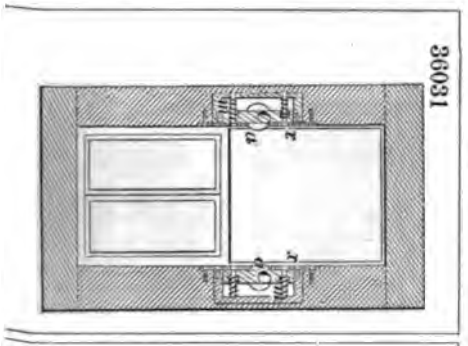

36028

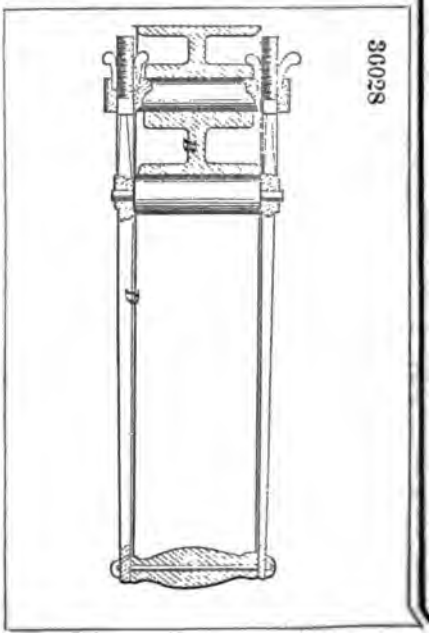

36032

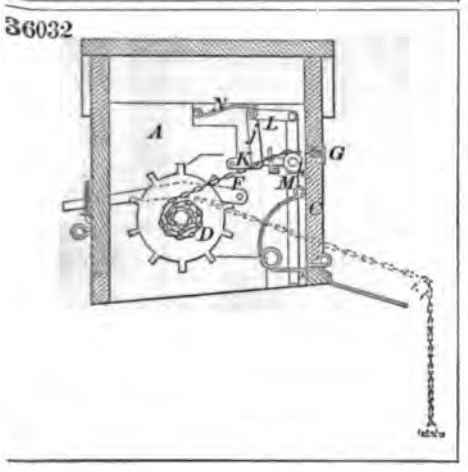

36033

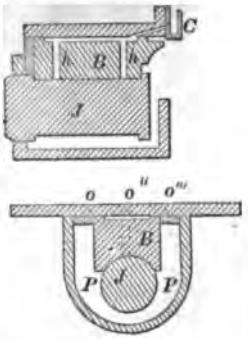

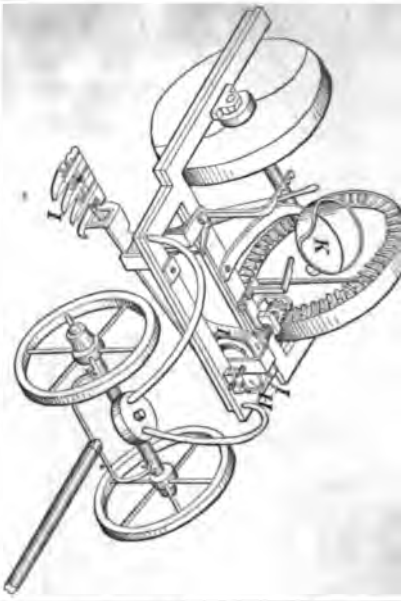

36036

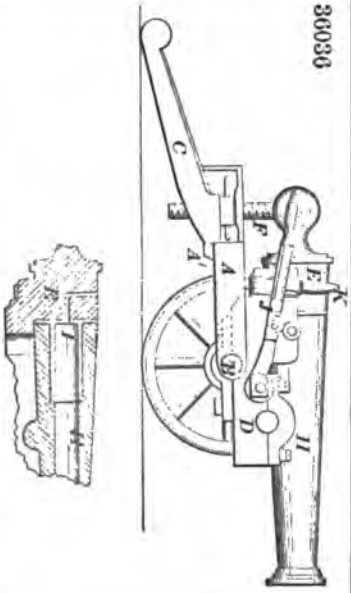

36035

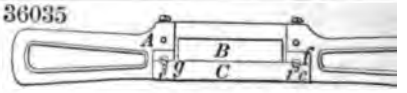

36038

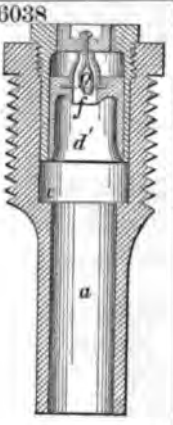

36037

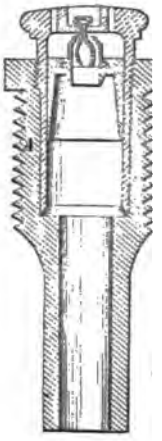

36040

36039

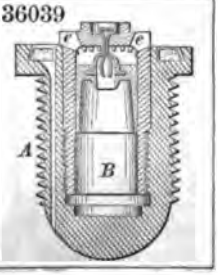

36041

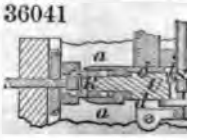

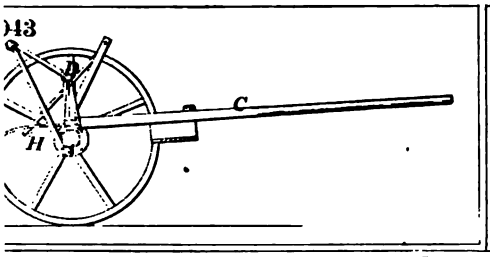
43
C
H

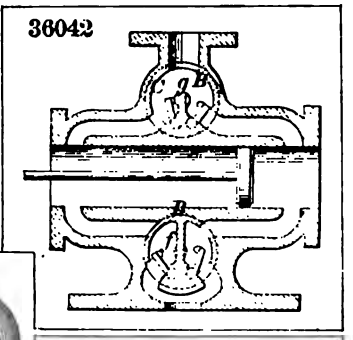
36042
B

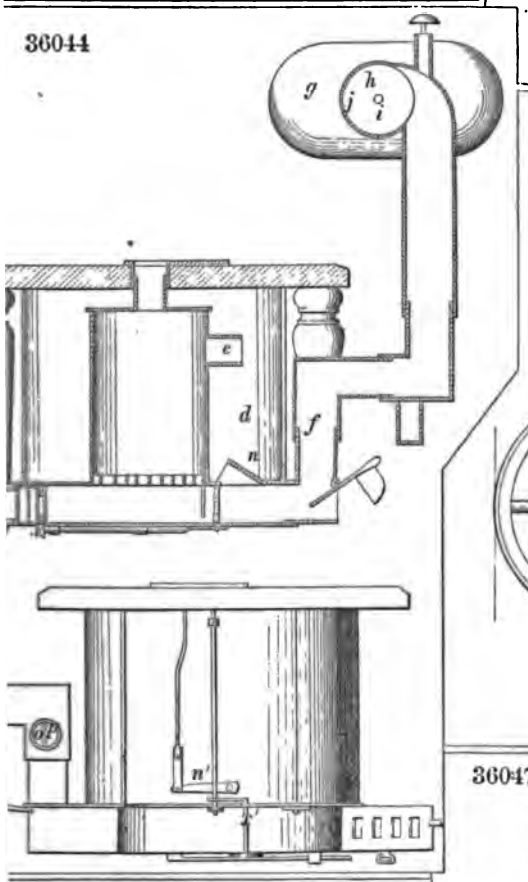
36044
g
h
j
i
e
d
f
n
n'

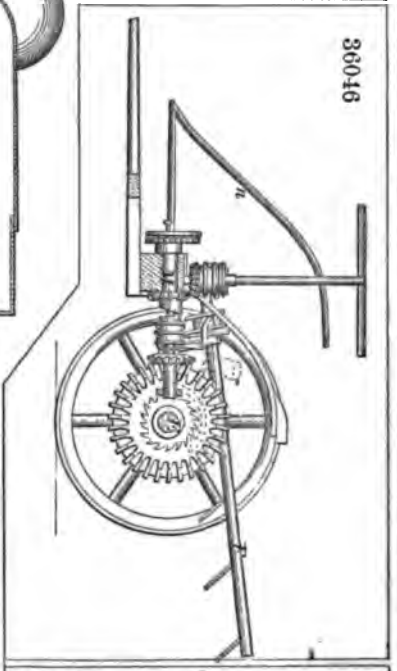
36046
n

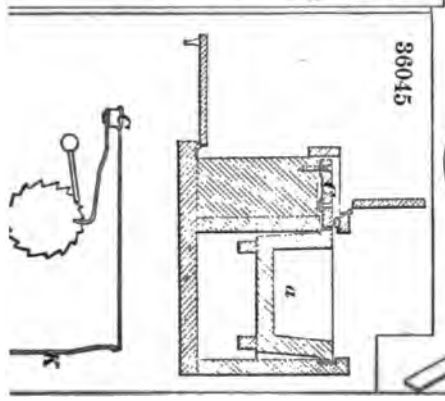
36045
G
a

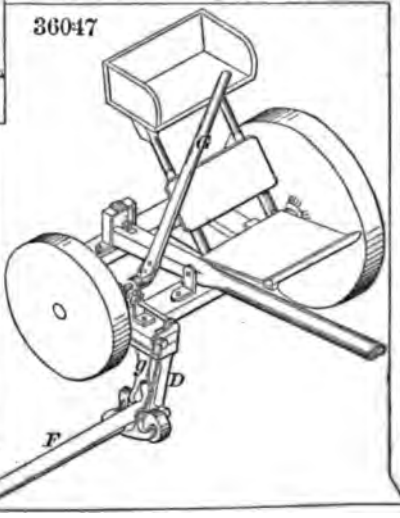
36047
G
O
D
F

36063

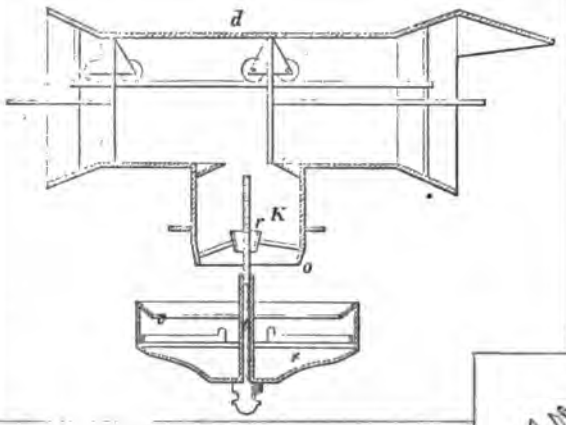

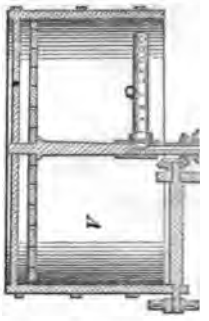

36051

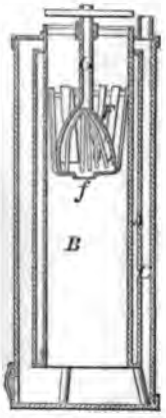

36050

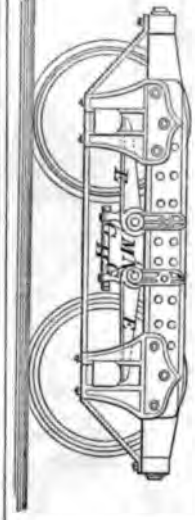

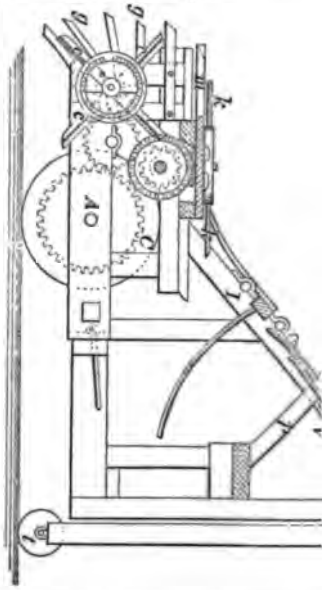

36052

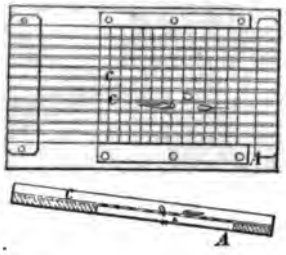

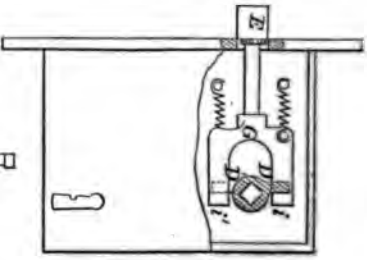

36054

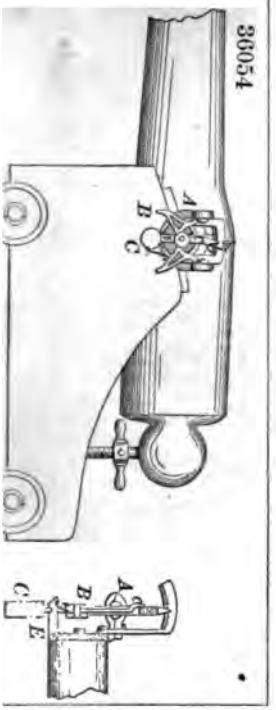

36055

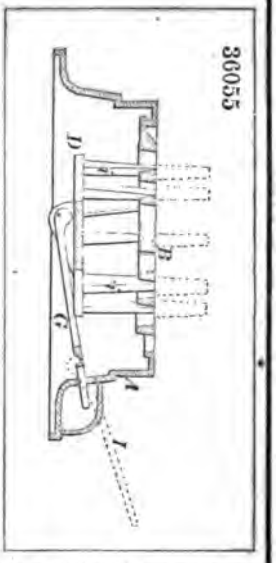

36056

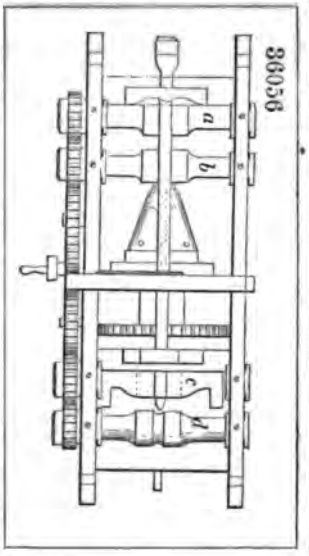

36057

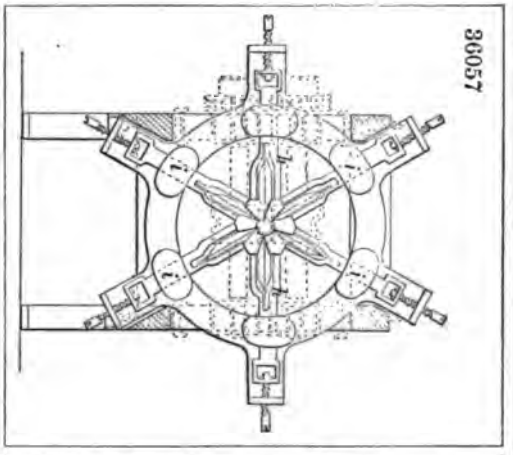

36058

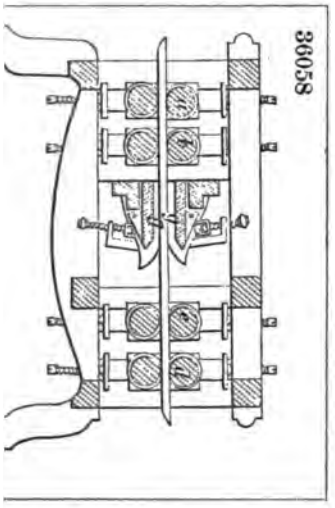

36060

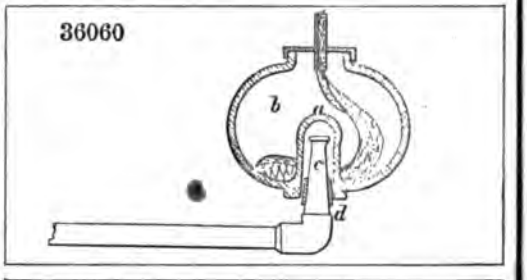

36061

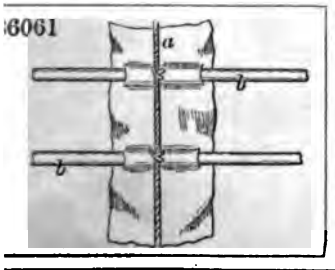

36059

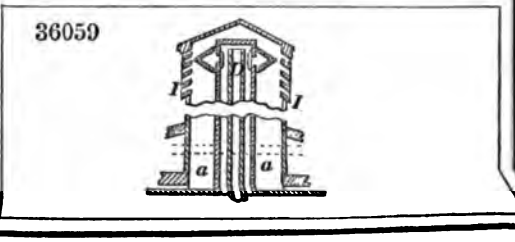

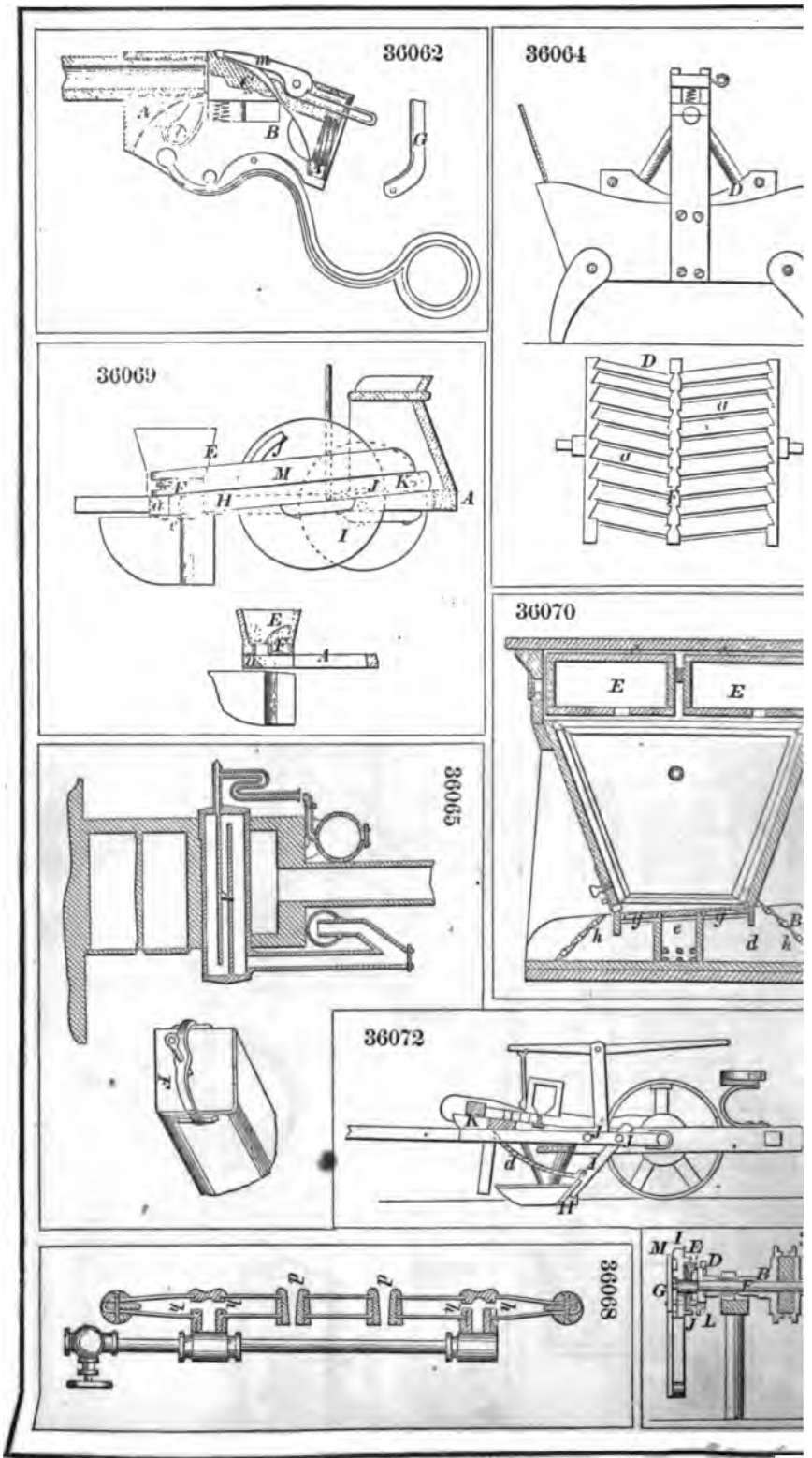
36062
36064
36069
36070
36065
36072
36068

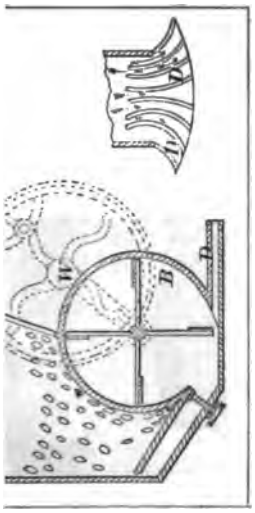

36074

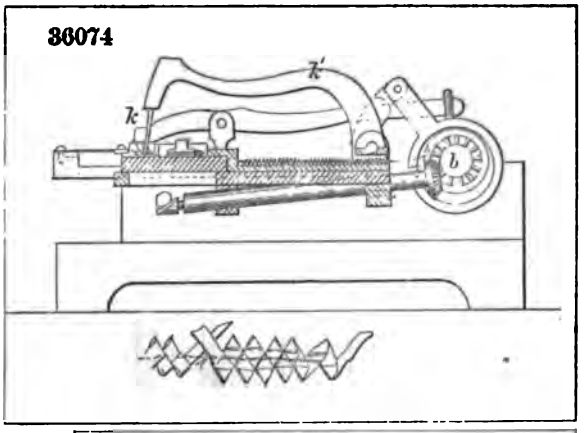

36076

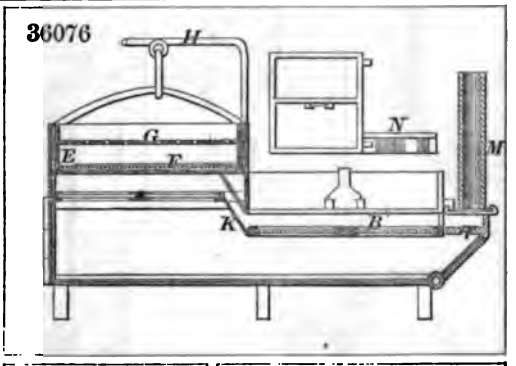

6075

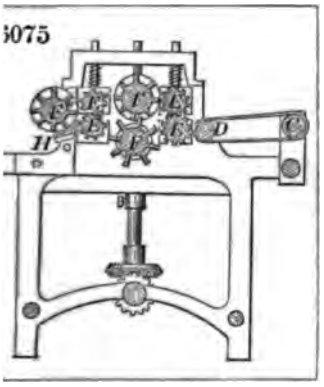

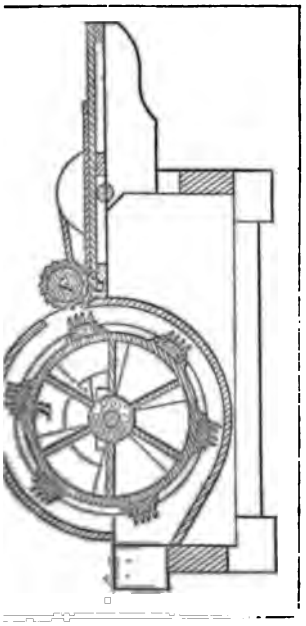

36079

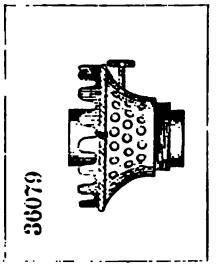

36077

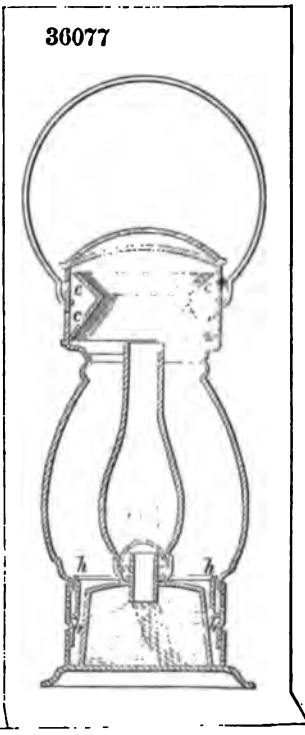

36078

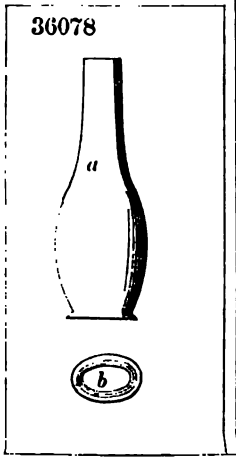

36081

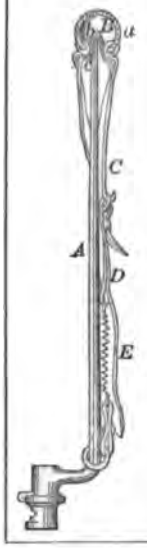

36083

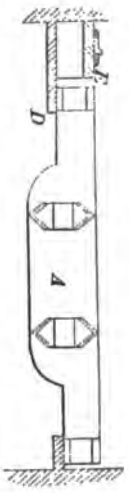

36082

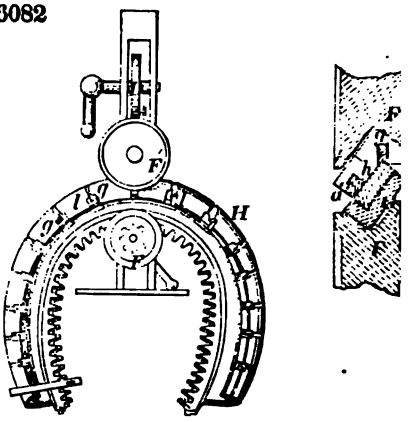

36084

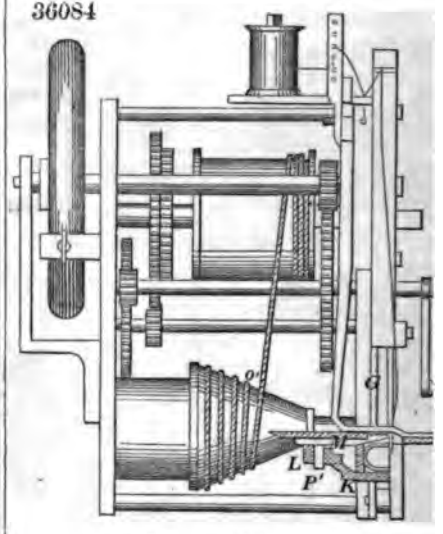

36086

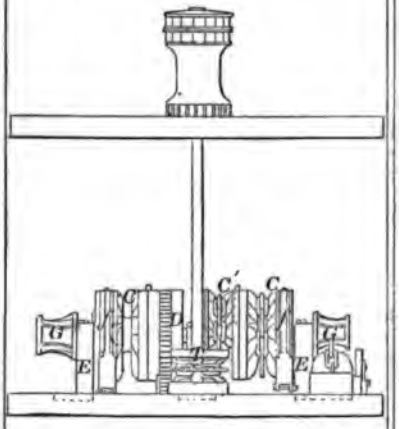

36085

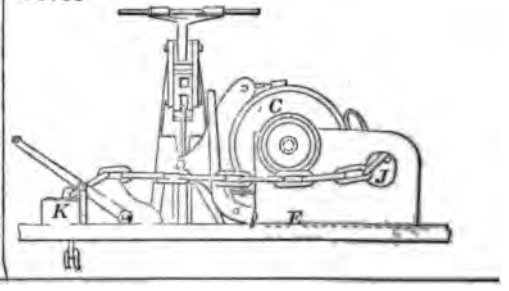

087

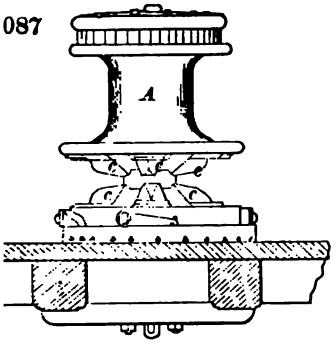

36088

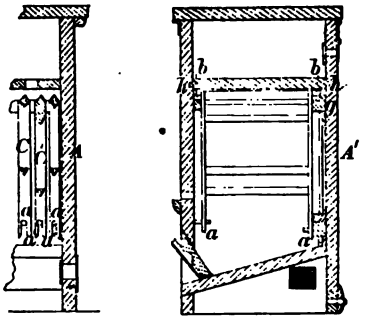

36089

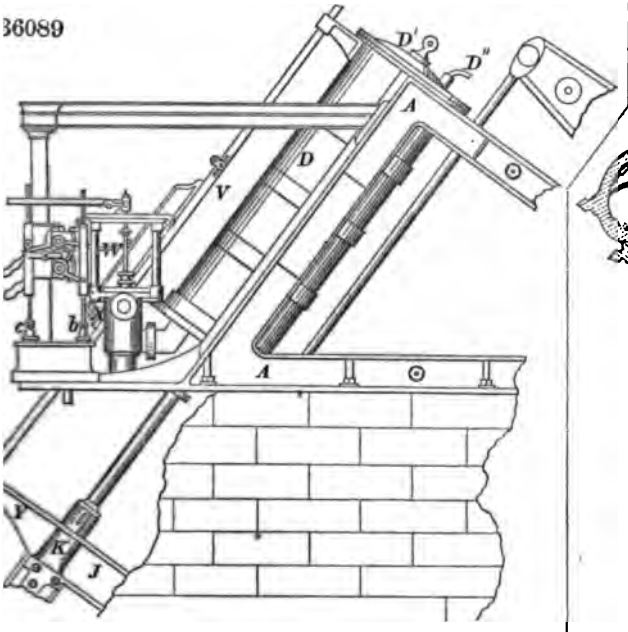

36092

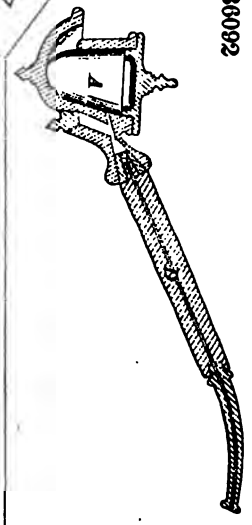

36090

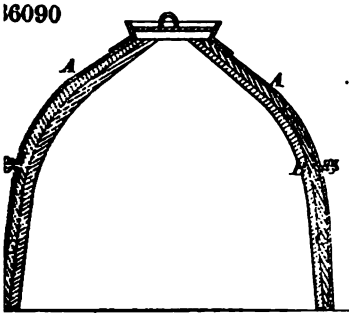

36091.

36093

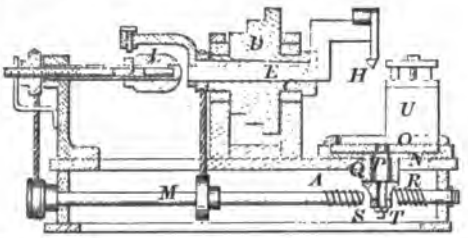

36094

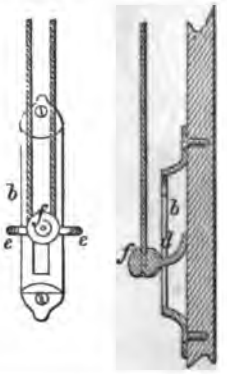

36095

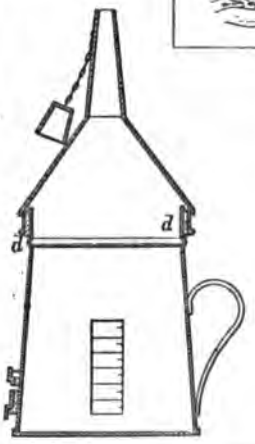

36097

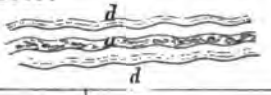

36096

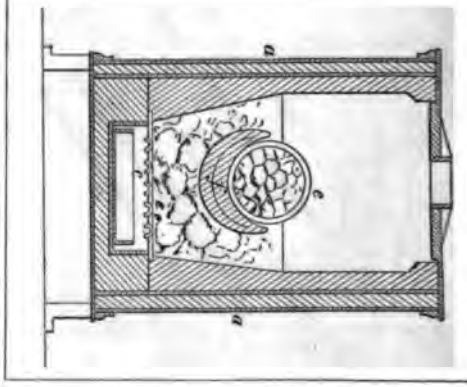

36098

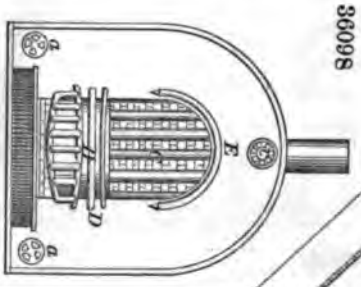

36099

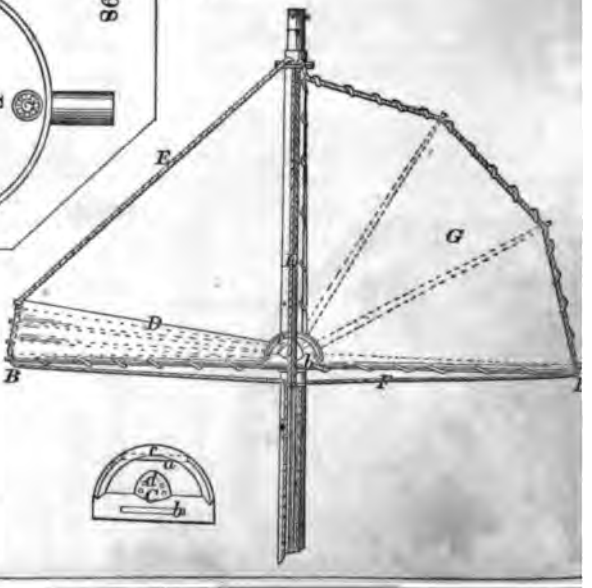

36100

101

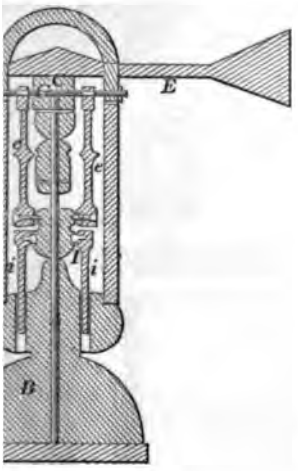

36102

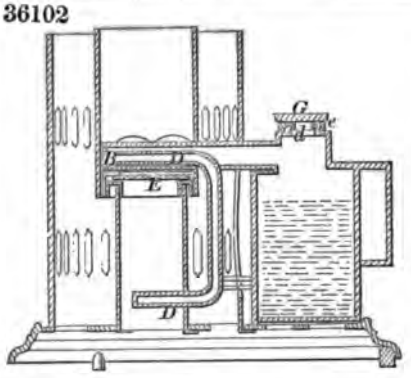

36103

6104

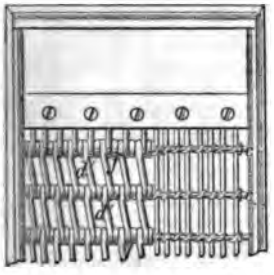

36107

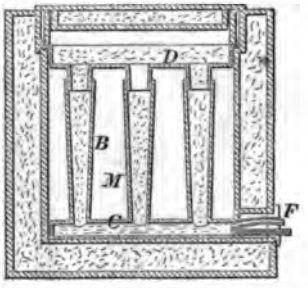

105

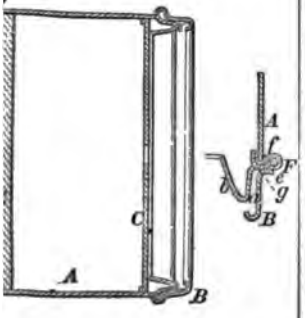

36108

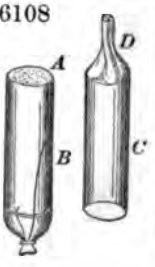

36106

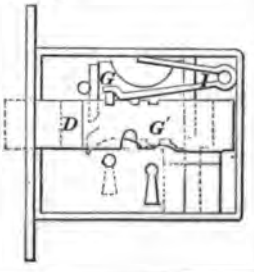

36110

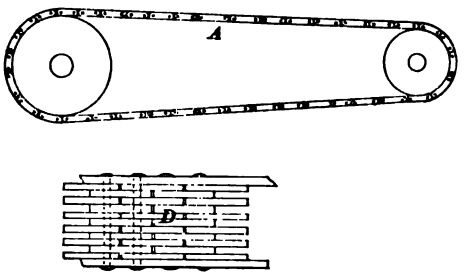

36109

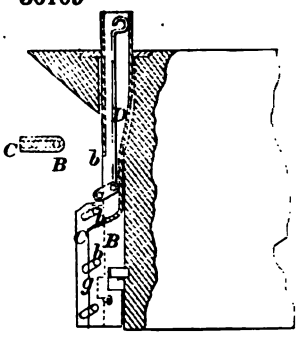

36111

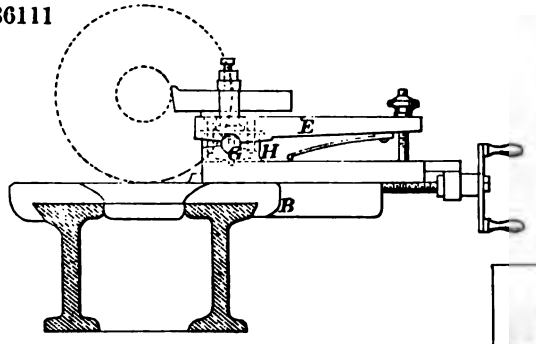

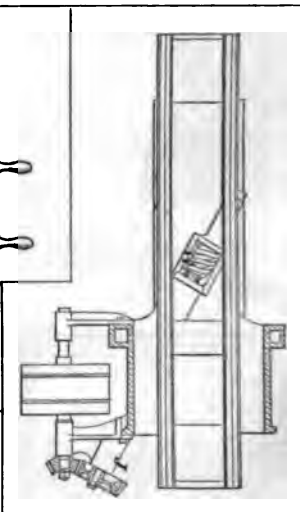

36112

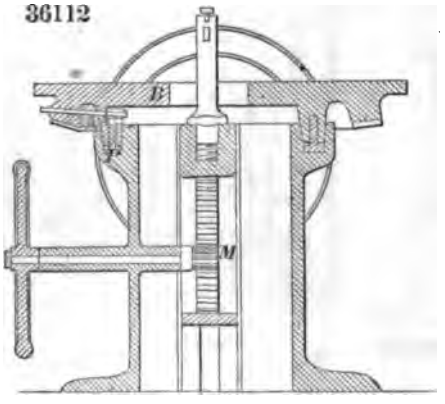

36115

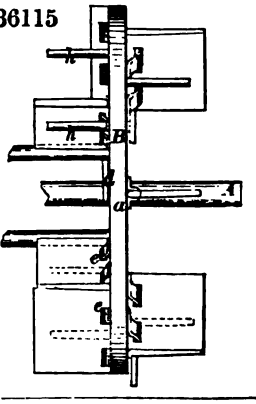

36116

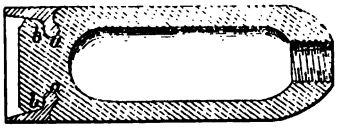

36114

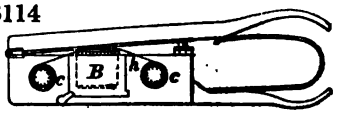

36117

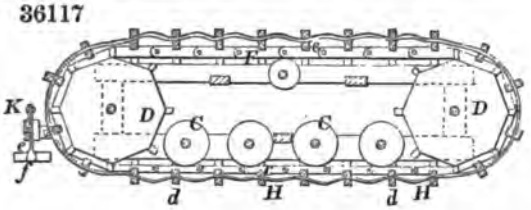

36118

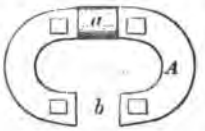

36119

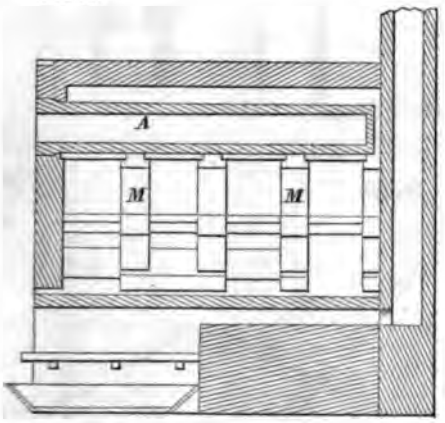

36120

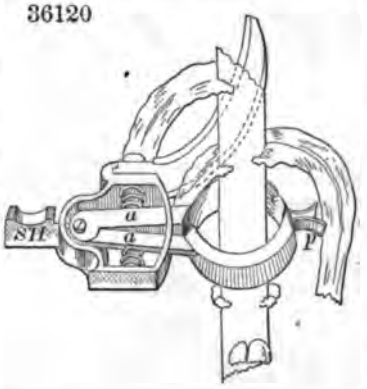

36123

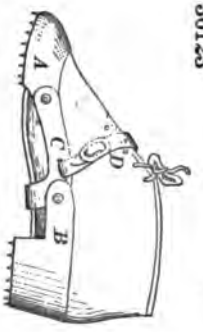

36124

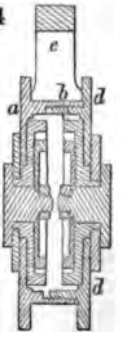

36121

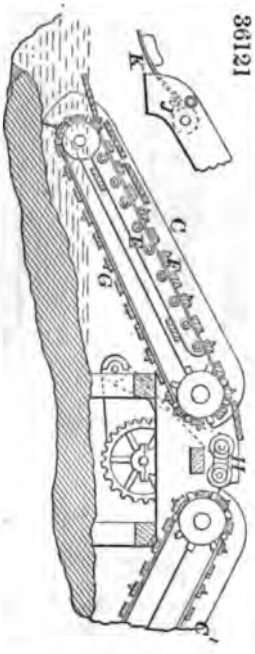

36122

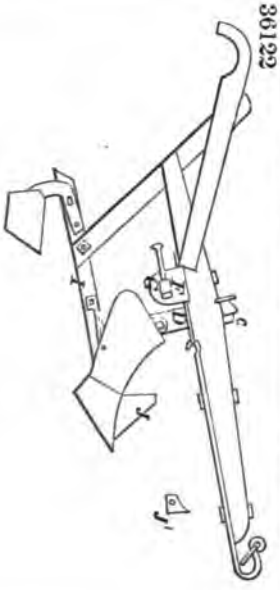

36125

36126

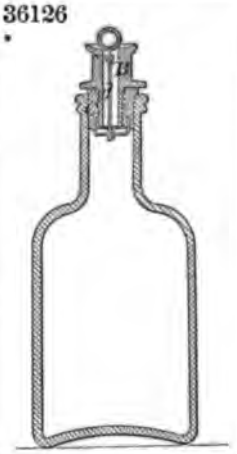

36127

36128

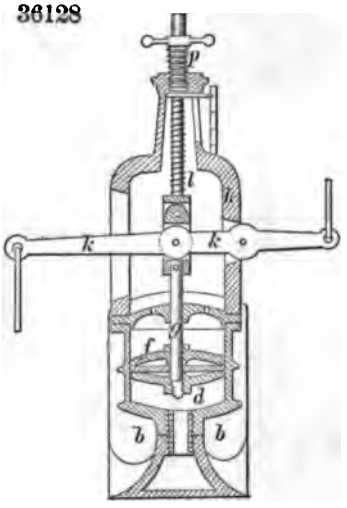

36130

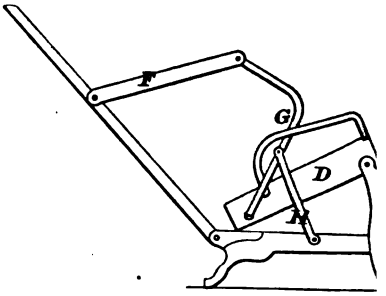

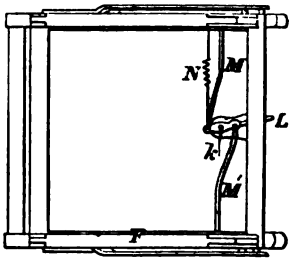

36131

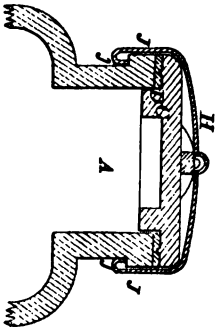

36129

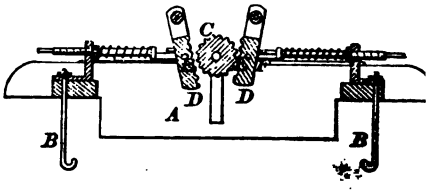

36132

36133

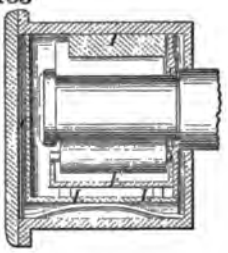

36136

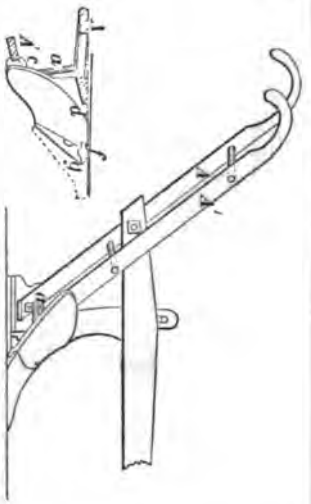

36135

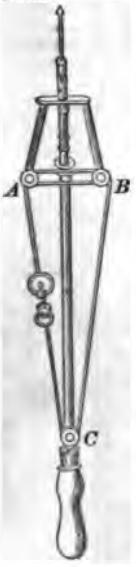

36138

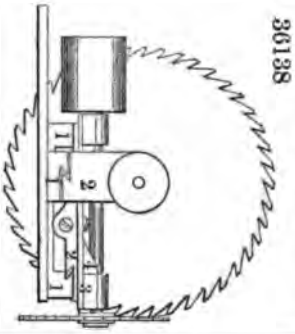

36141

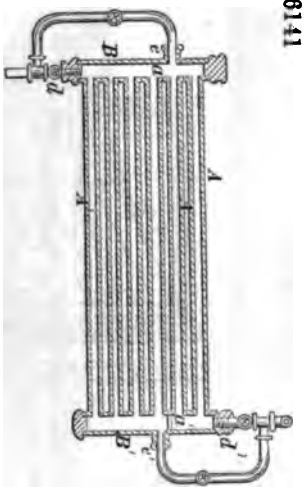

36139

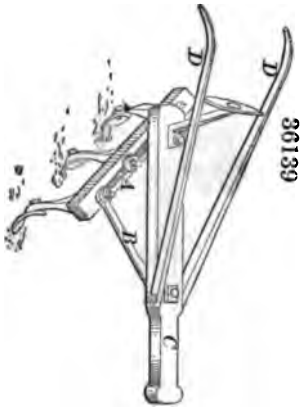

36140

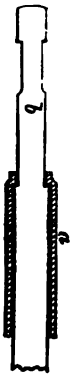

36137

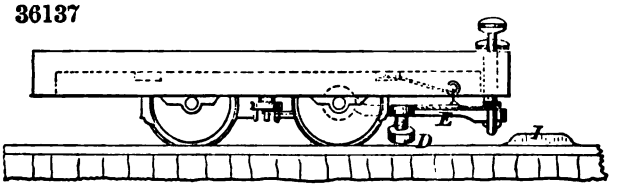

36143

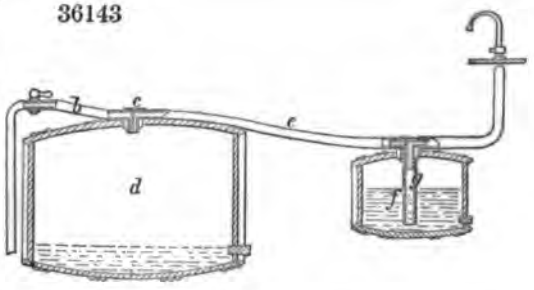

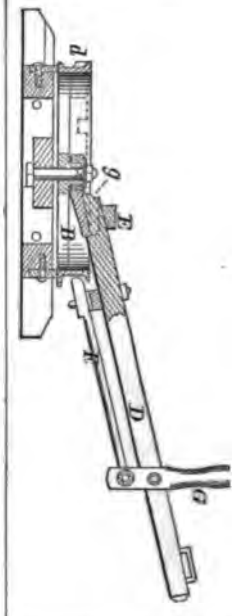

36144

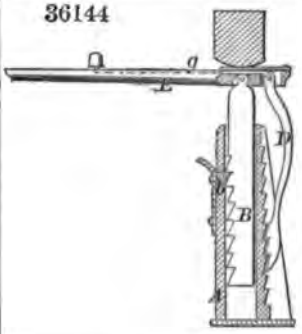

36145

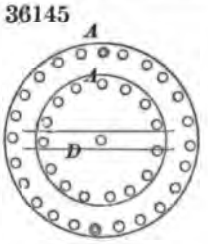

36146

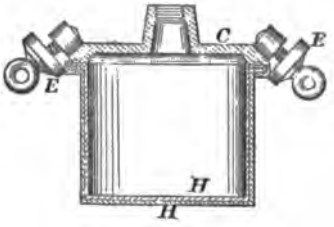

36147

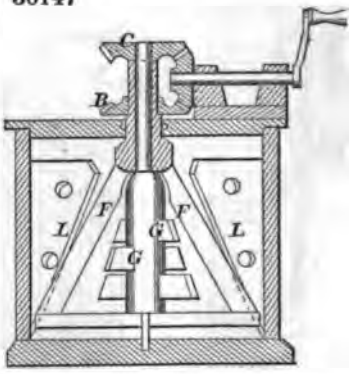

36149

36148

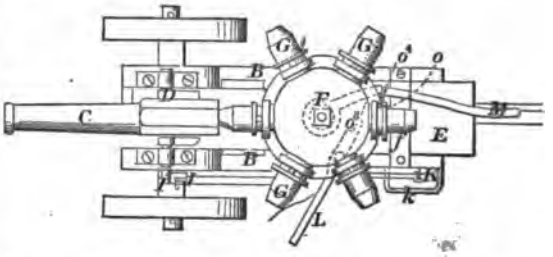

36150

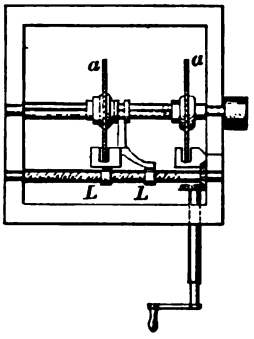

36152

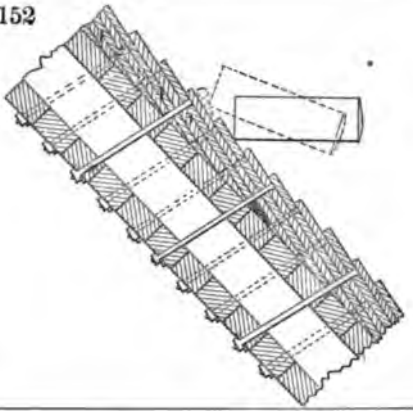

36151

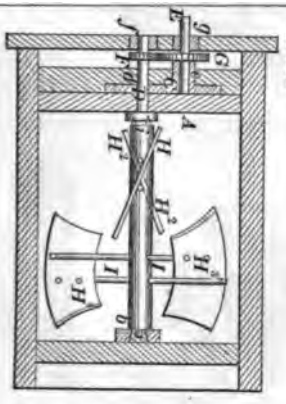

36157

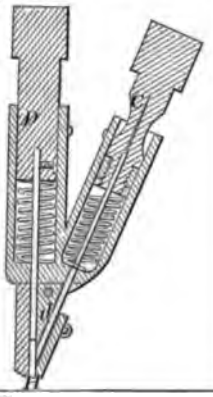

36156

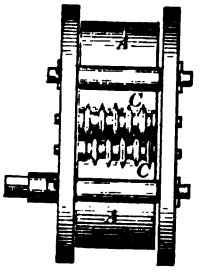

36154

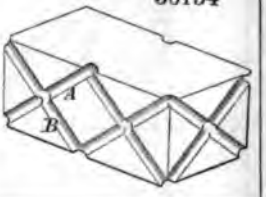

36158

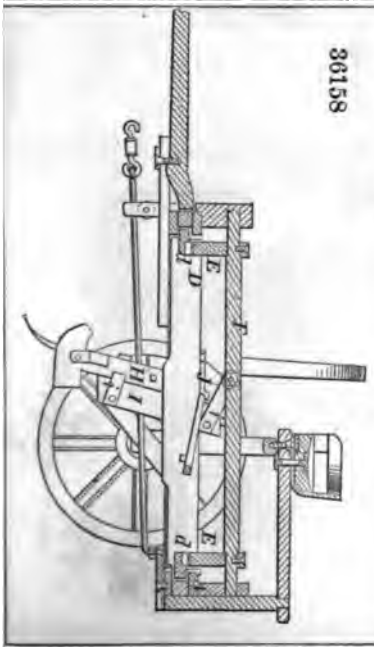

36159

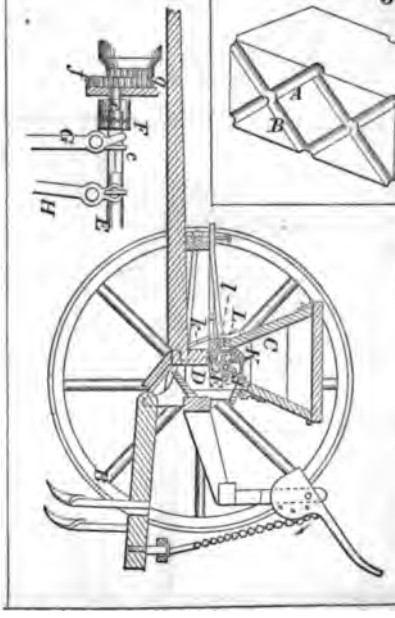

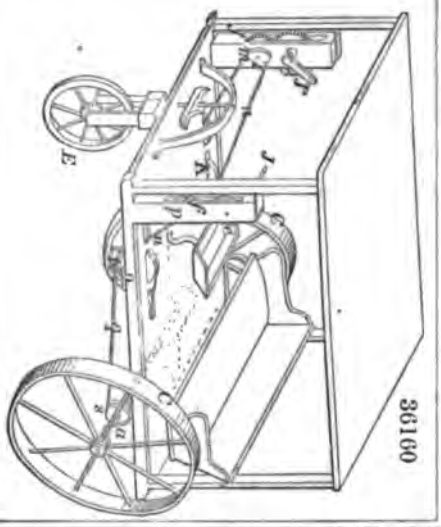

36160

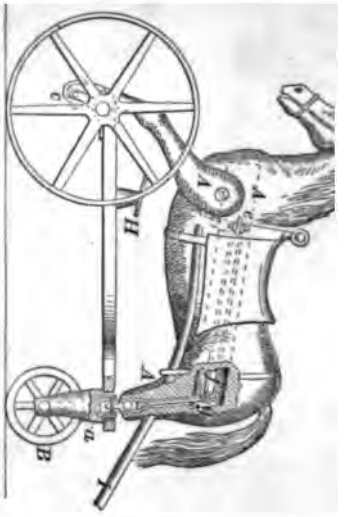

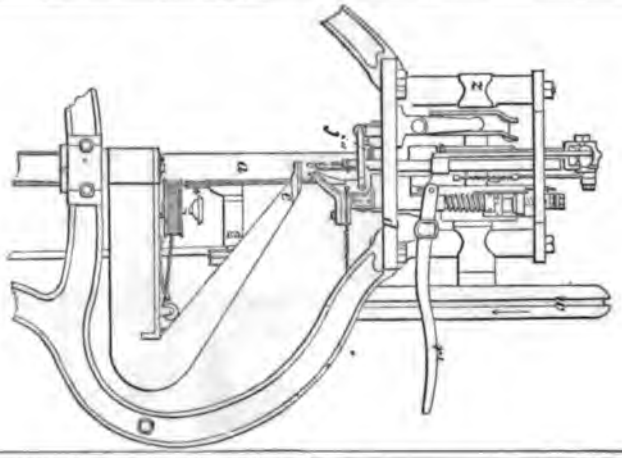

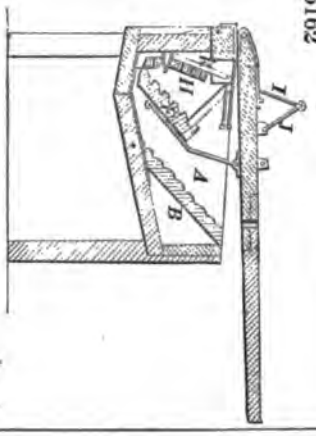

36162

36164

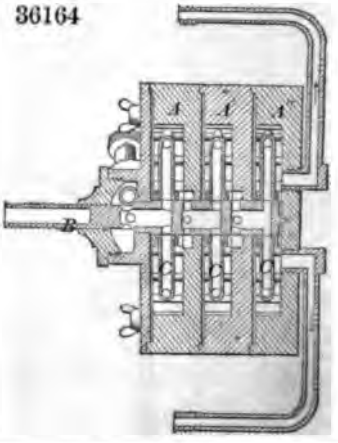

36165

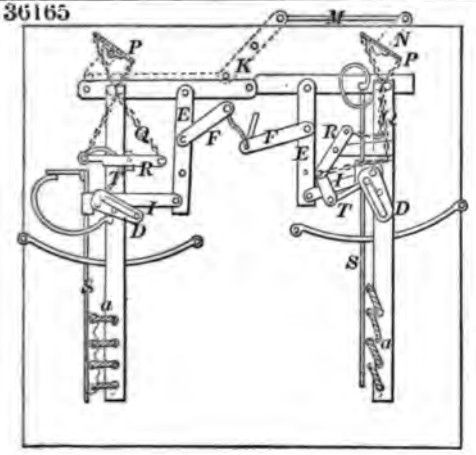

36167

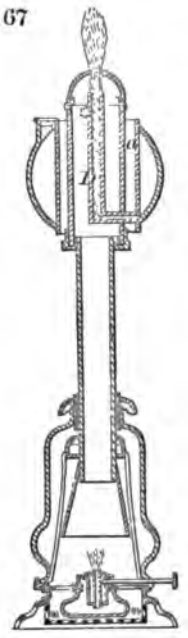

36166

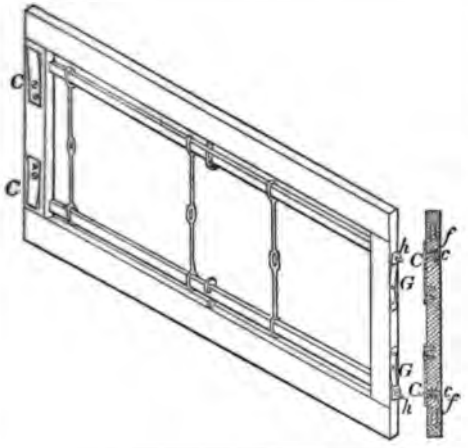

36169

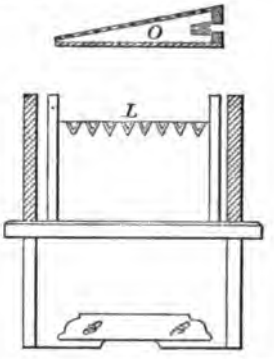

36170

36172

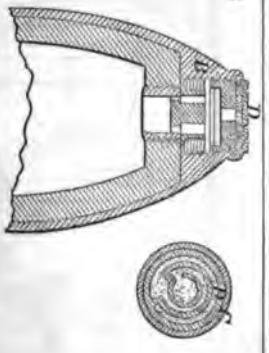

36171

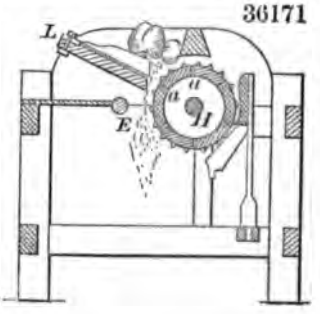

36173

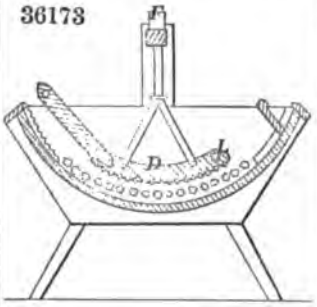

36176

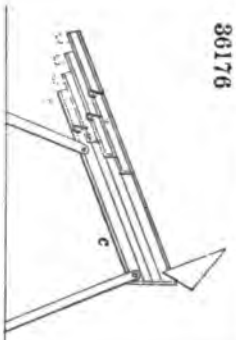

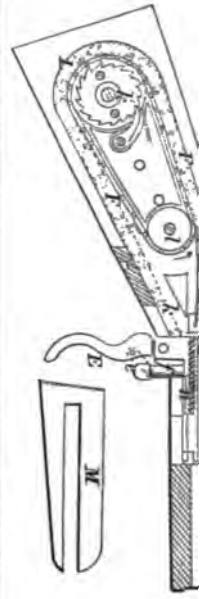

36175

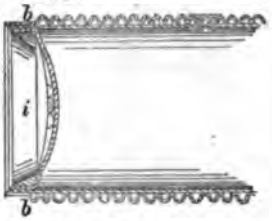

36179

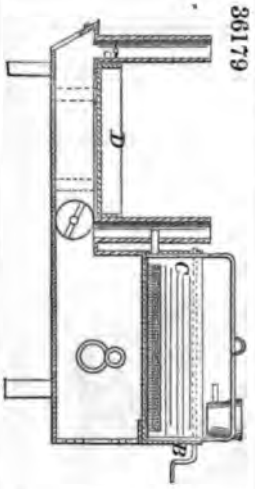

36177

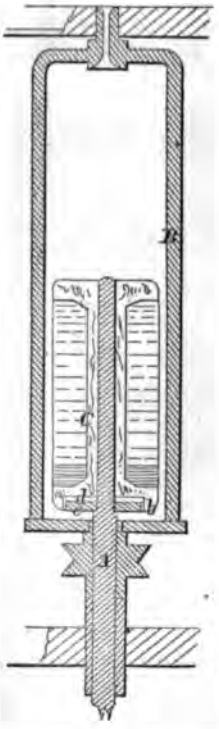

36178

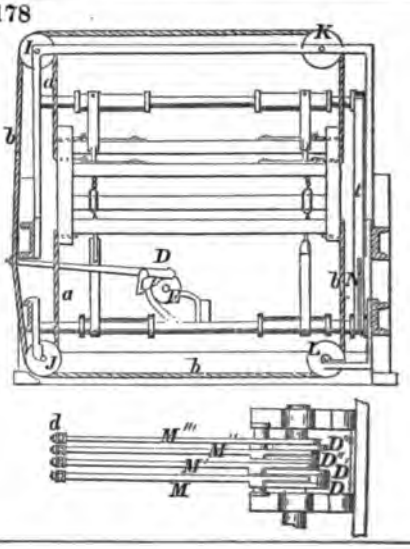

36180

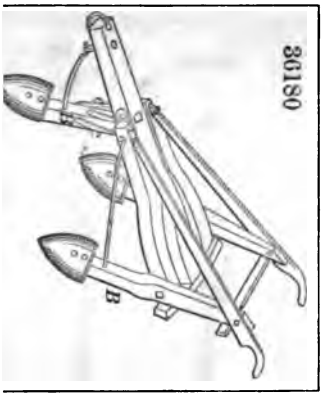

36182

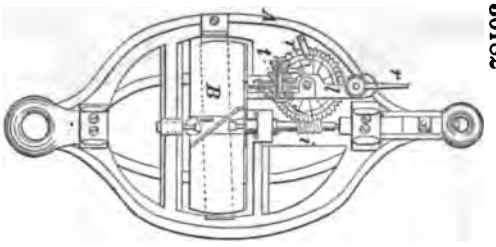

36181

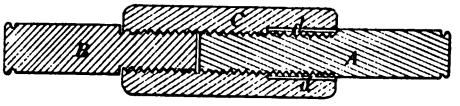

36183

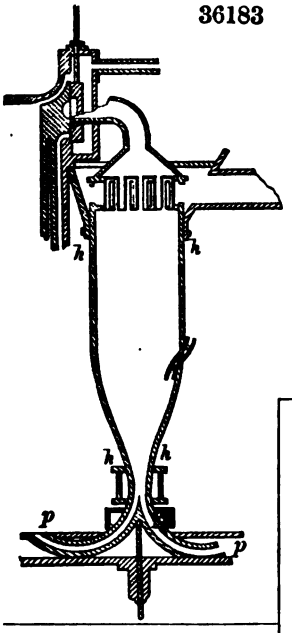

36186

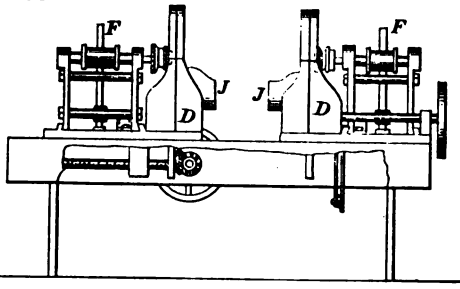

36187

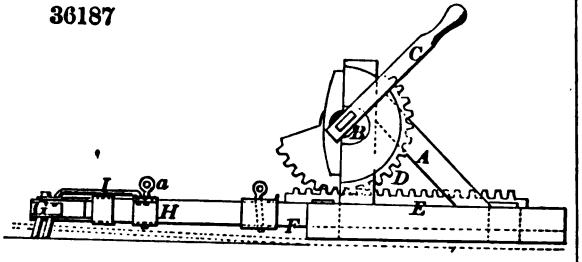

36185

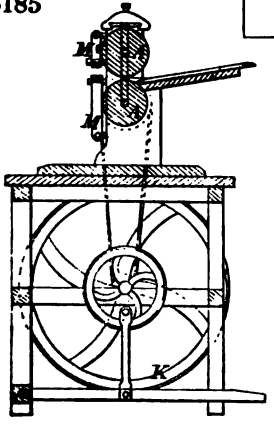

36188

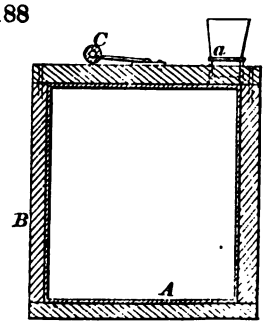

36189

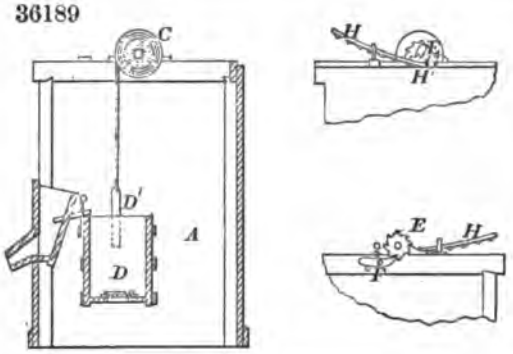

36190

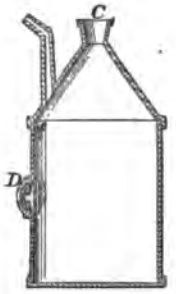

36193

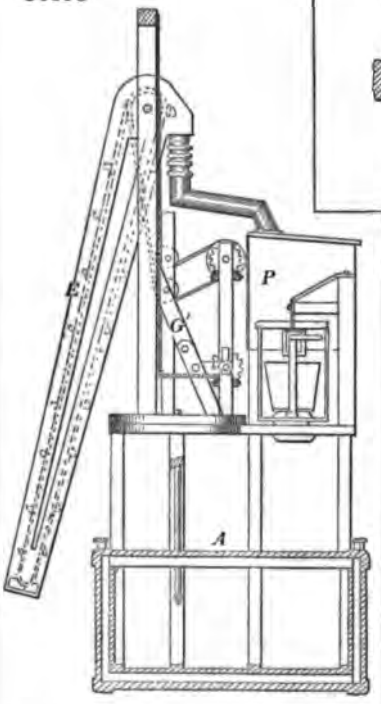

36194

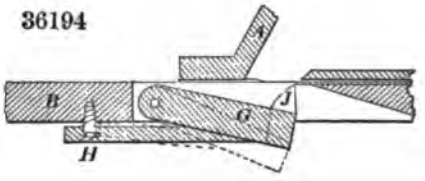

36196

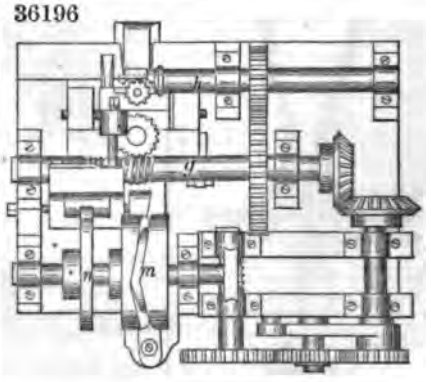

36191

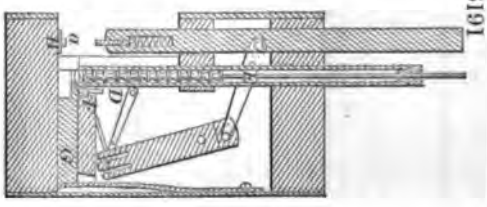

36192

36198

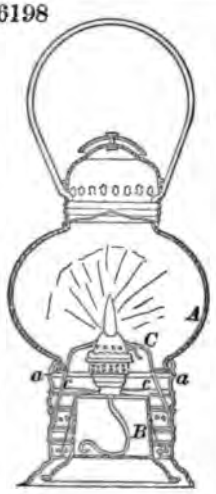

36199

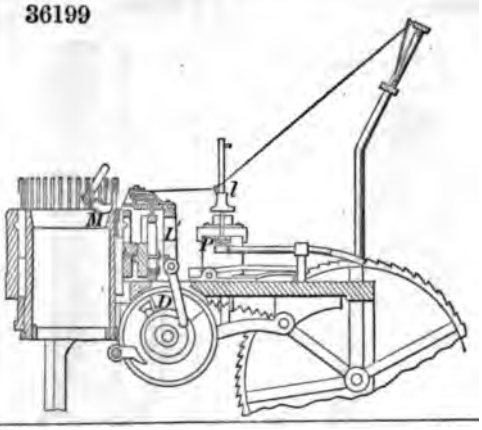

36202

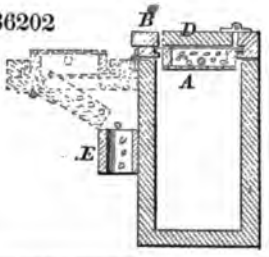

36200

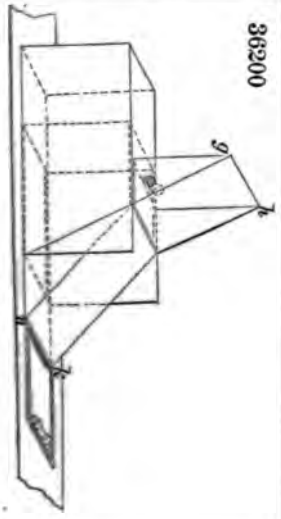

36201

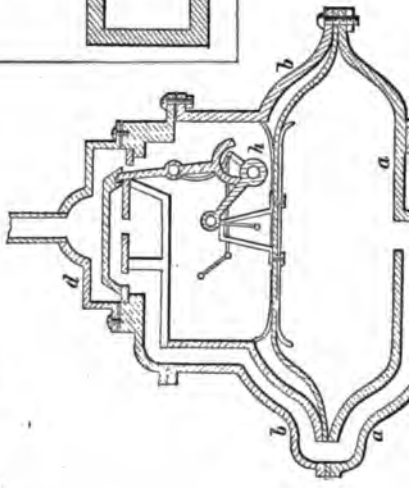

36203

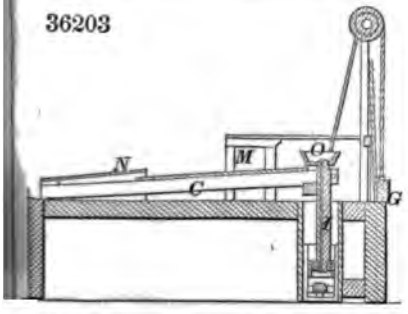

36204

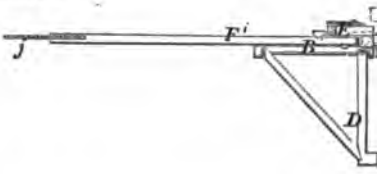

36209

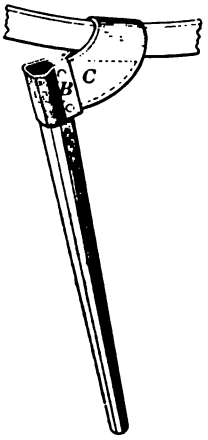

36205

36207

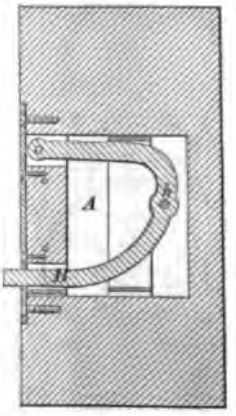

36210

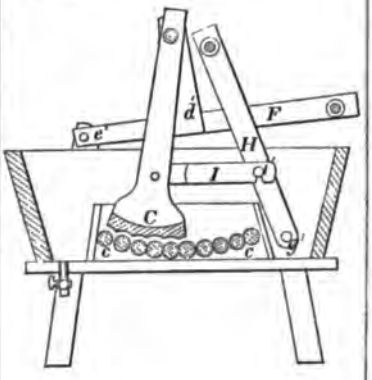

36208

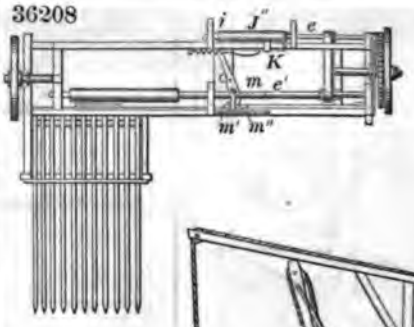

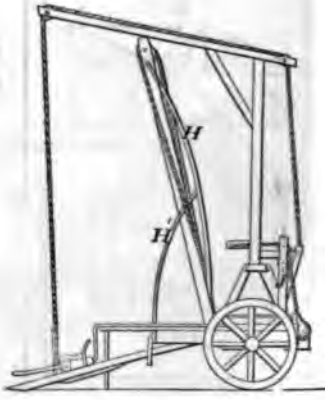

36211

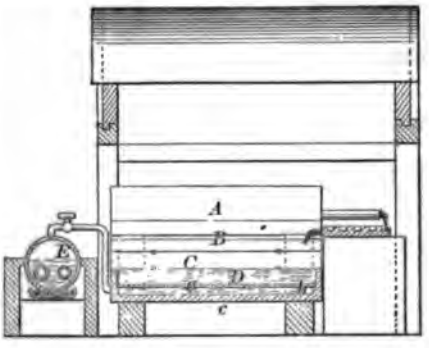

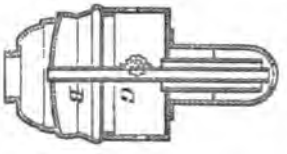

36212

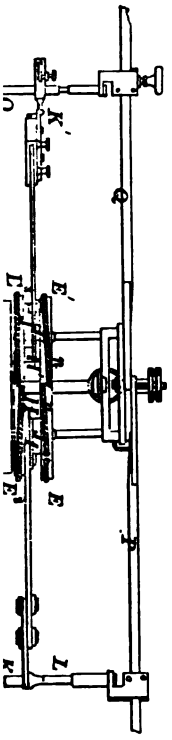

36214

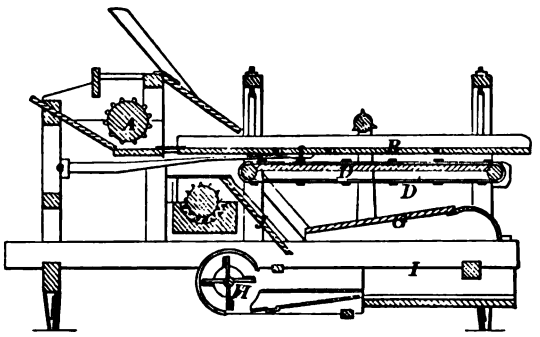

36216

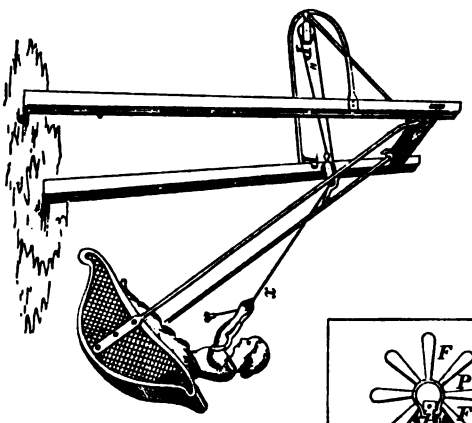

36217

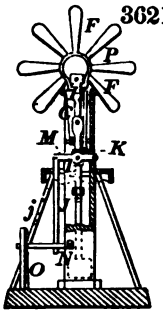

6213

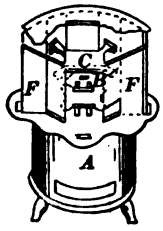

36219

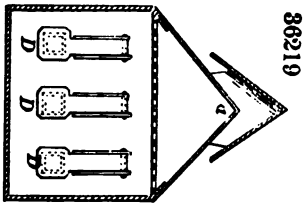

36218

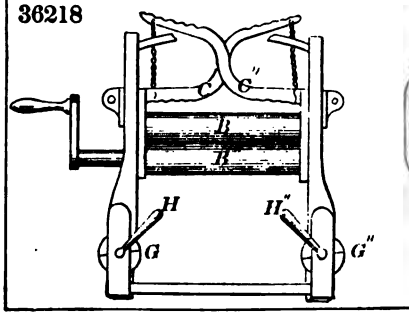

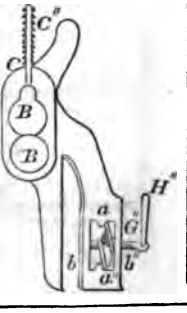

5215

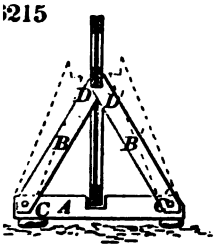

36220

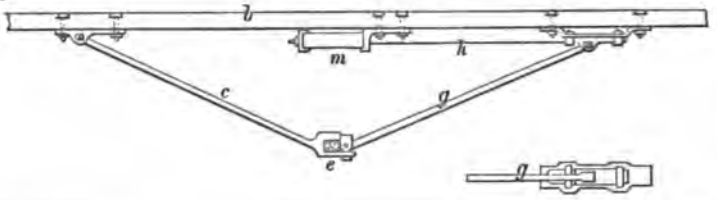

36221

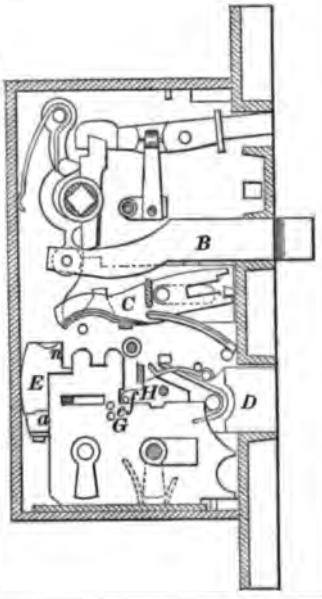

36222

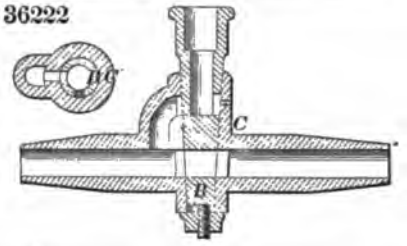

36223

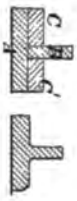

36225

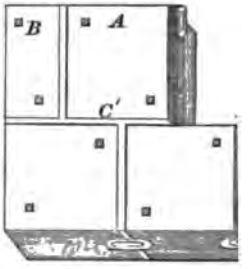

36224

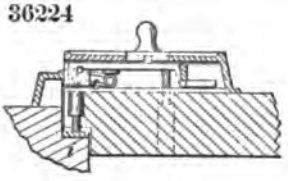

36226

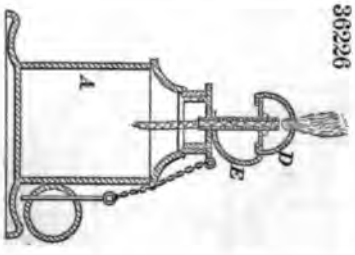

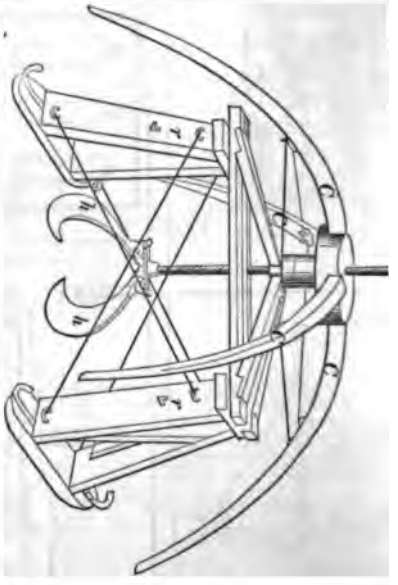

36228

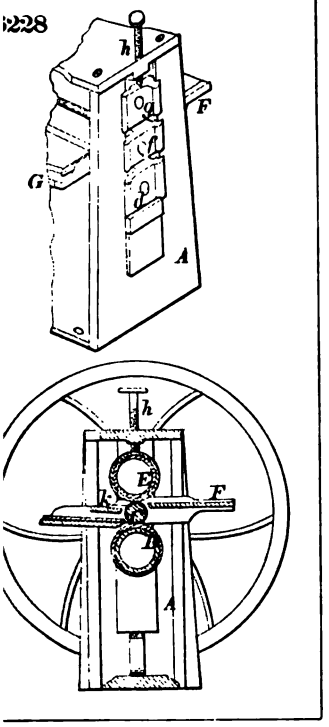

36232

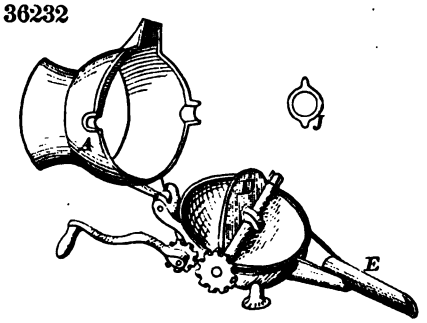

36231

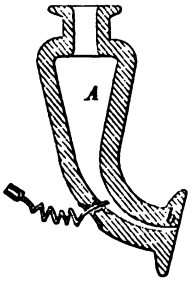

36233

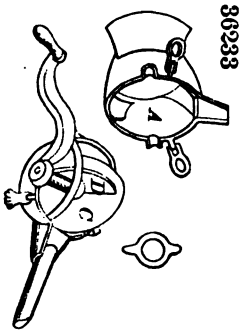

36229

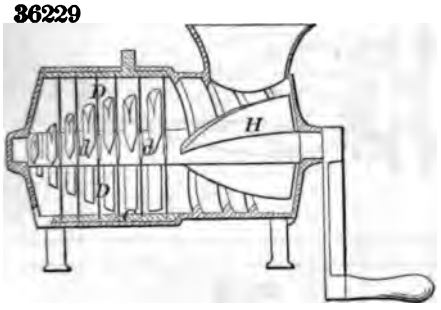

36235

36234

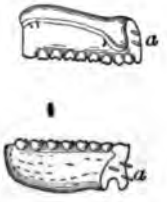

36230

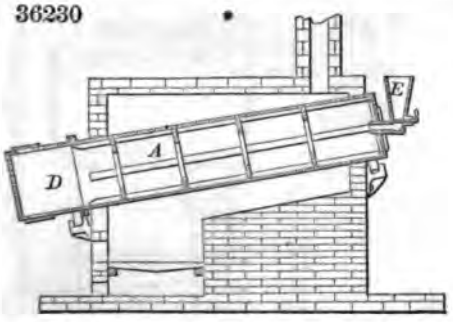

36236

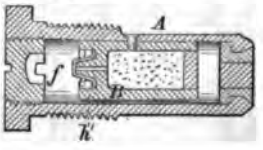

36237

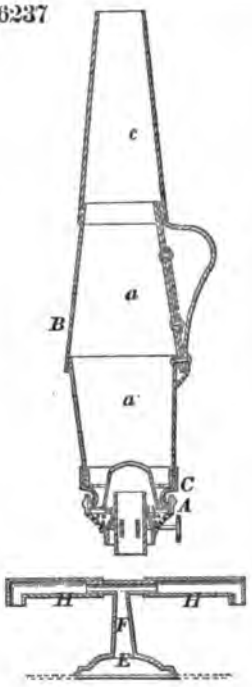

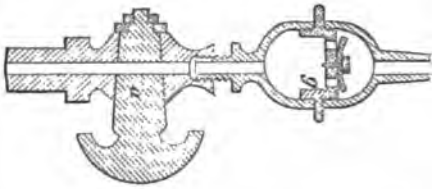

36239

36240

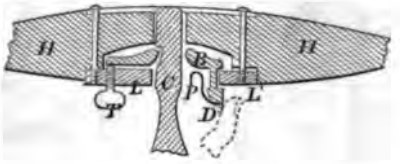

36241

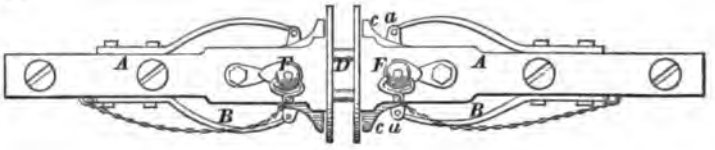

36244

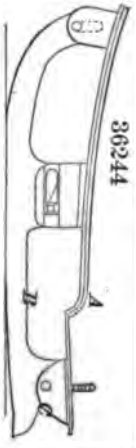

36243

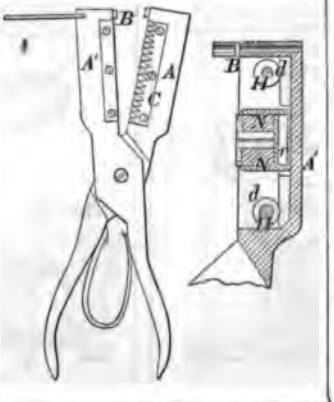

36242

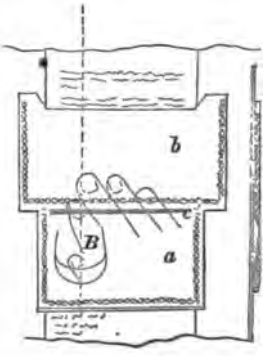

36245

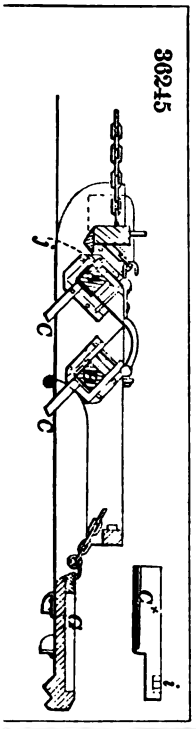

36246

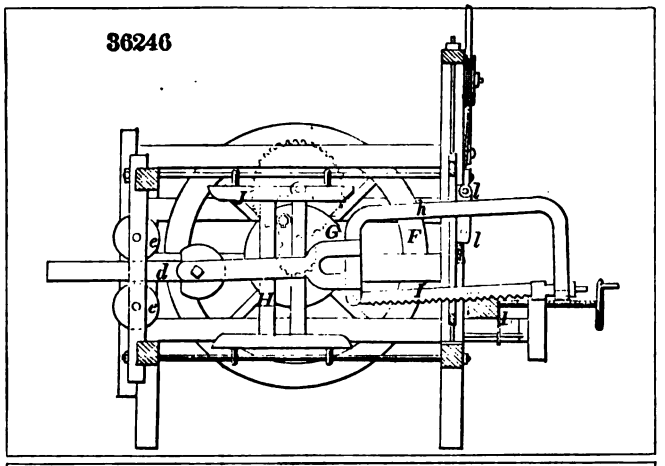

36247

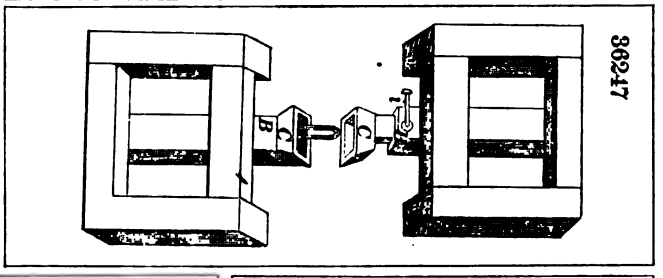

36249

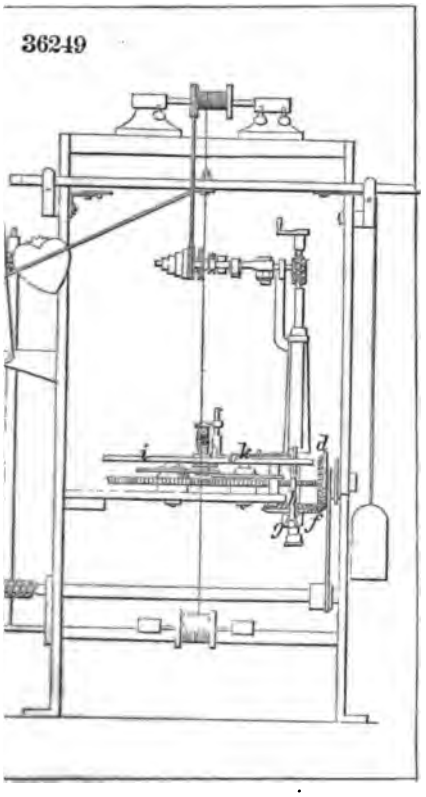

36248

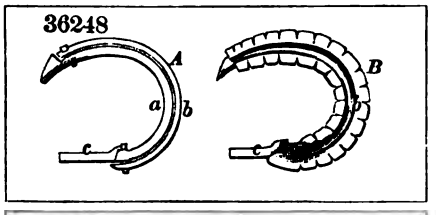

36250

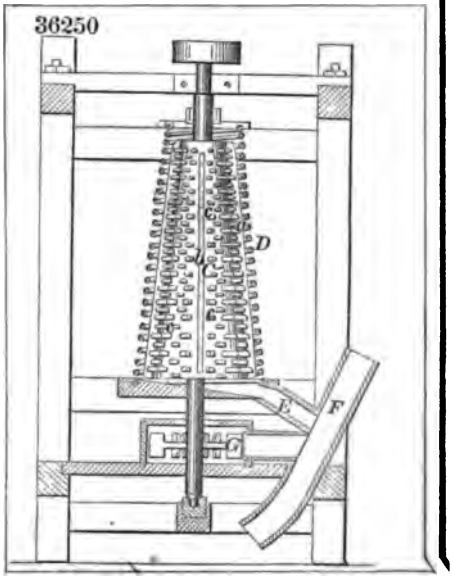

36251

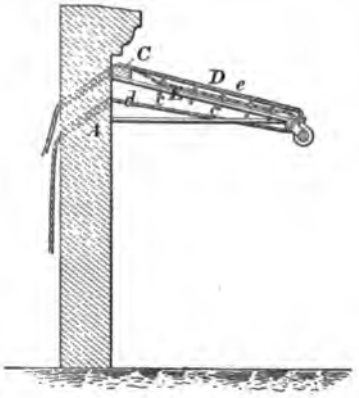

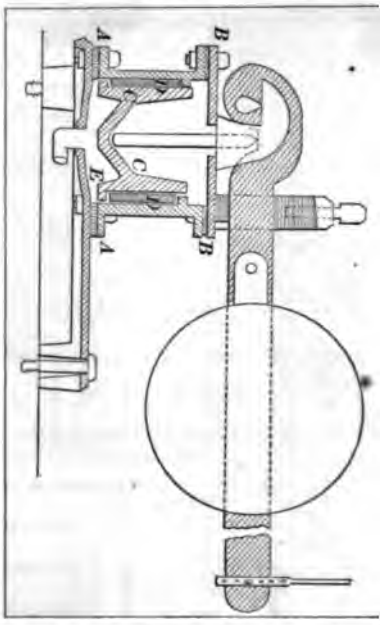

36254

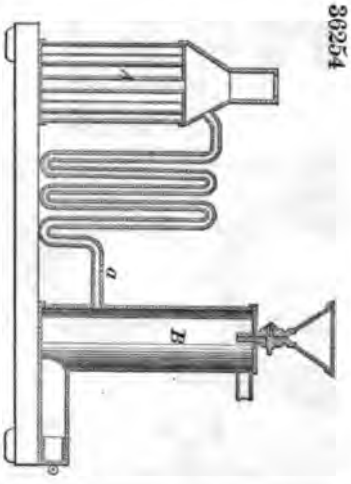

36253

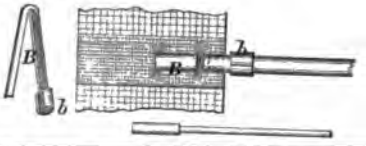

36255

36256

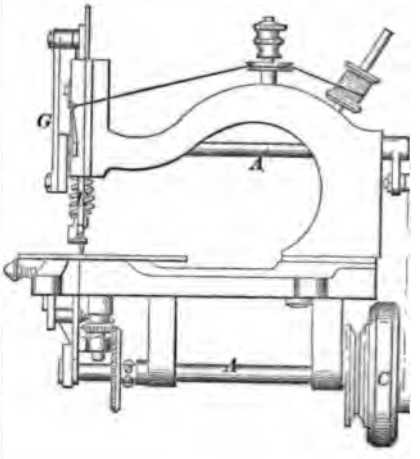

36257

36258

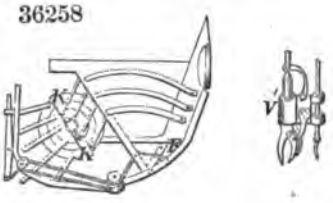

36259

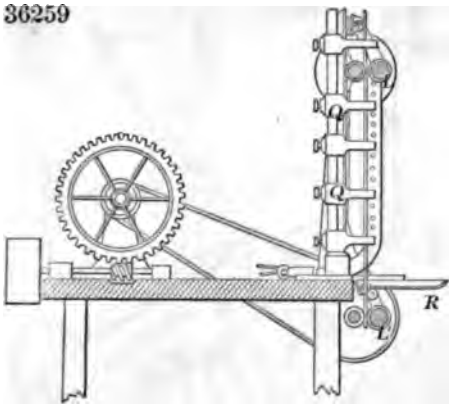

36260

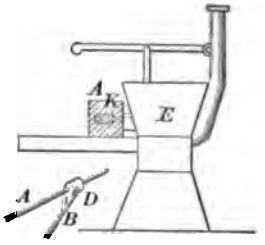

36261

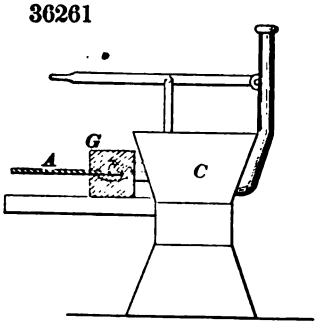

36263

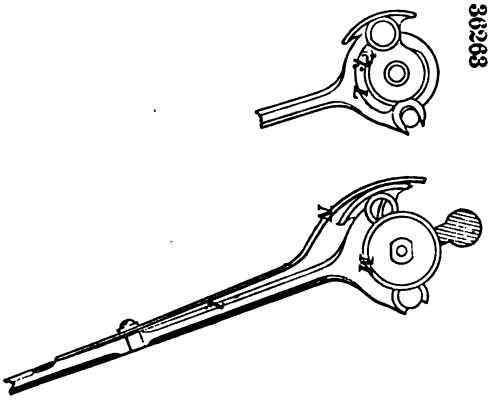

36262

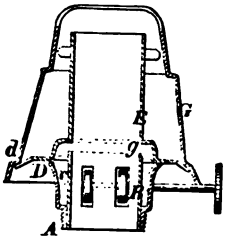

36264

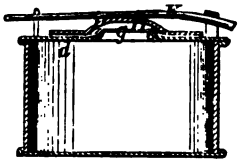

36265

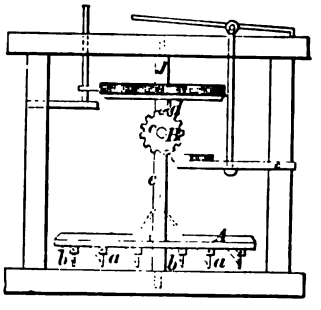

36266

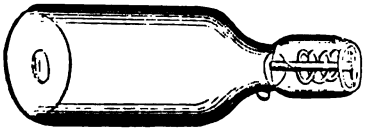

36267

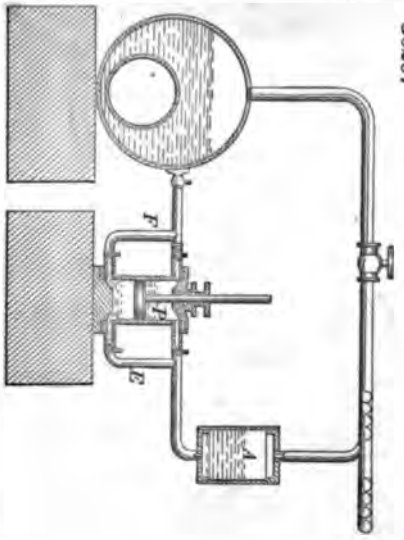

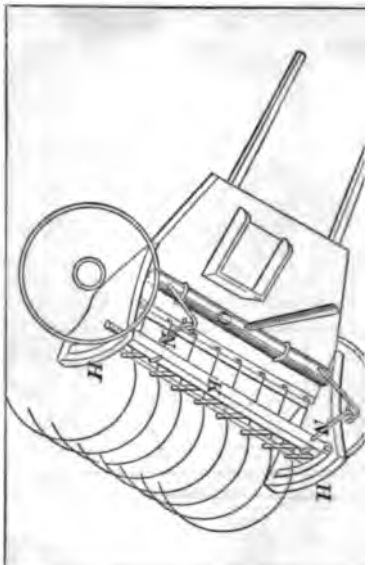

36269

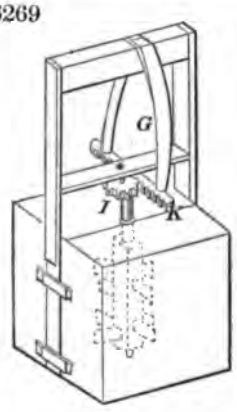

36270

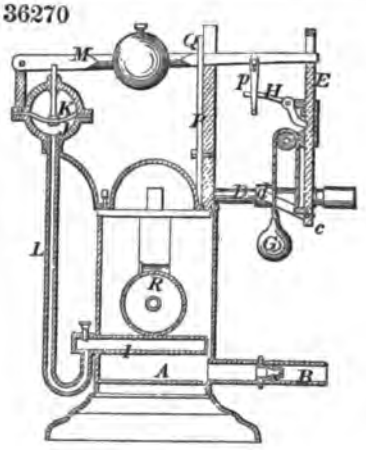

36271

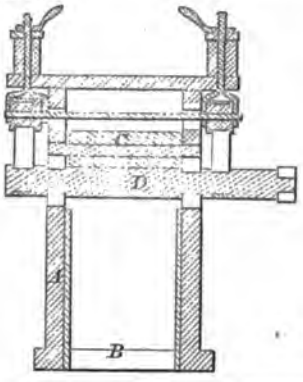

36272

36273

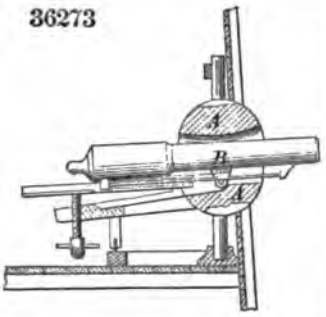

36274

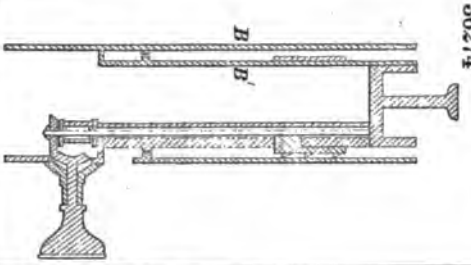

36275

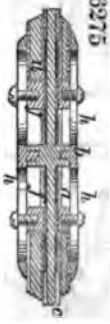

36276

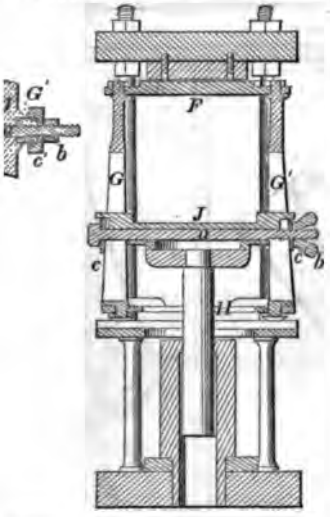

36277

36278

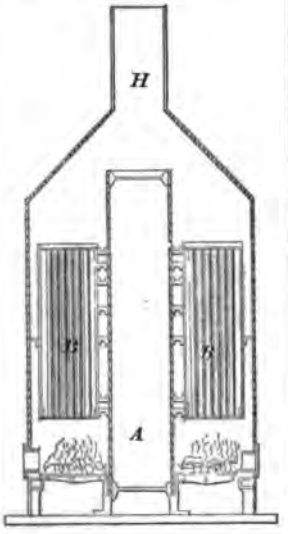

36279

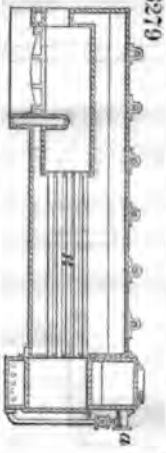

36280

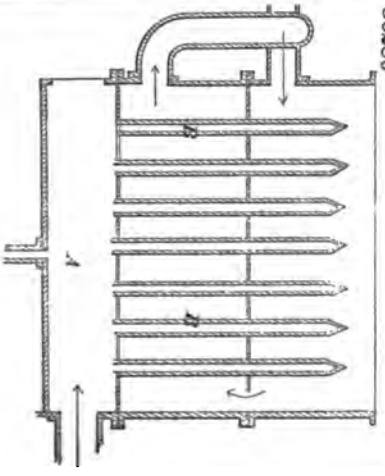

36281

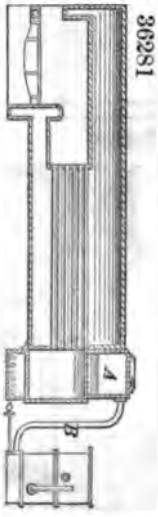

36282

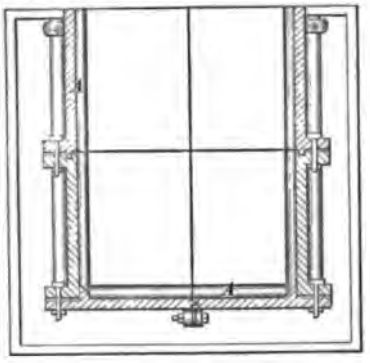

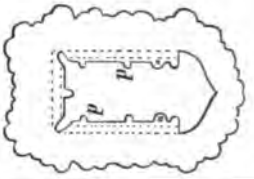

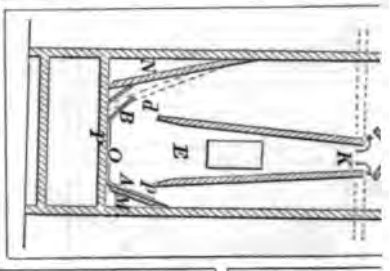

36285

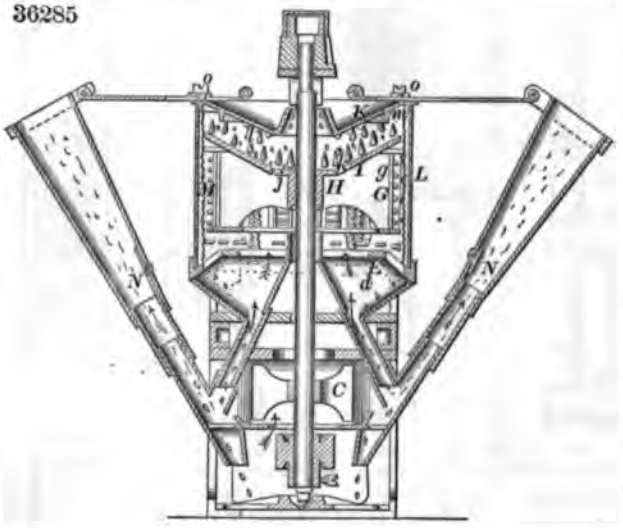

36290

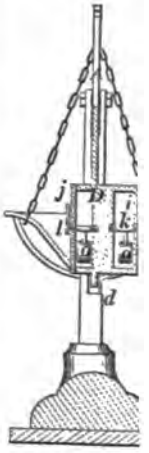

36288

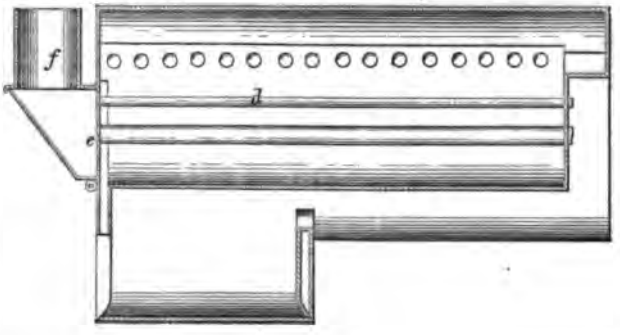

36289

36291

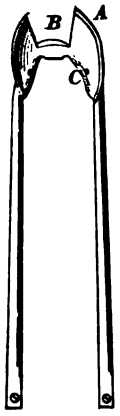

36292

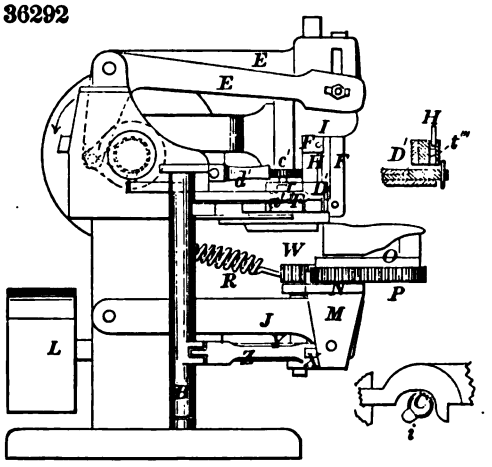

36294

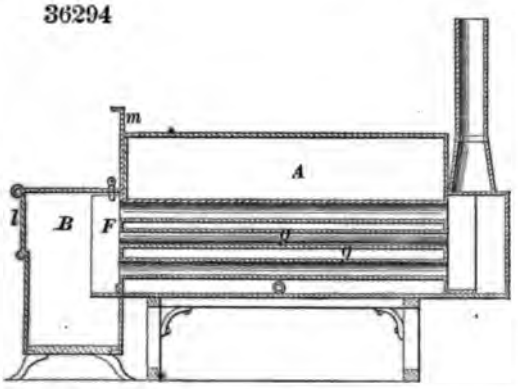

36293

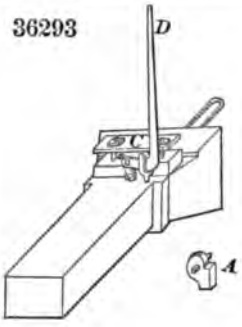

36295

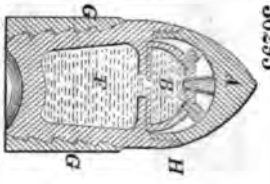

36296

36297

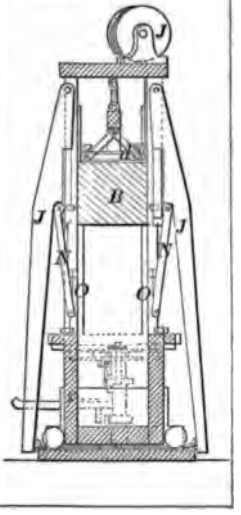

36298

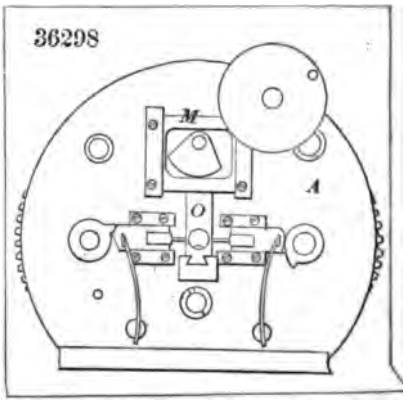

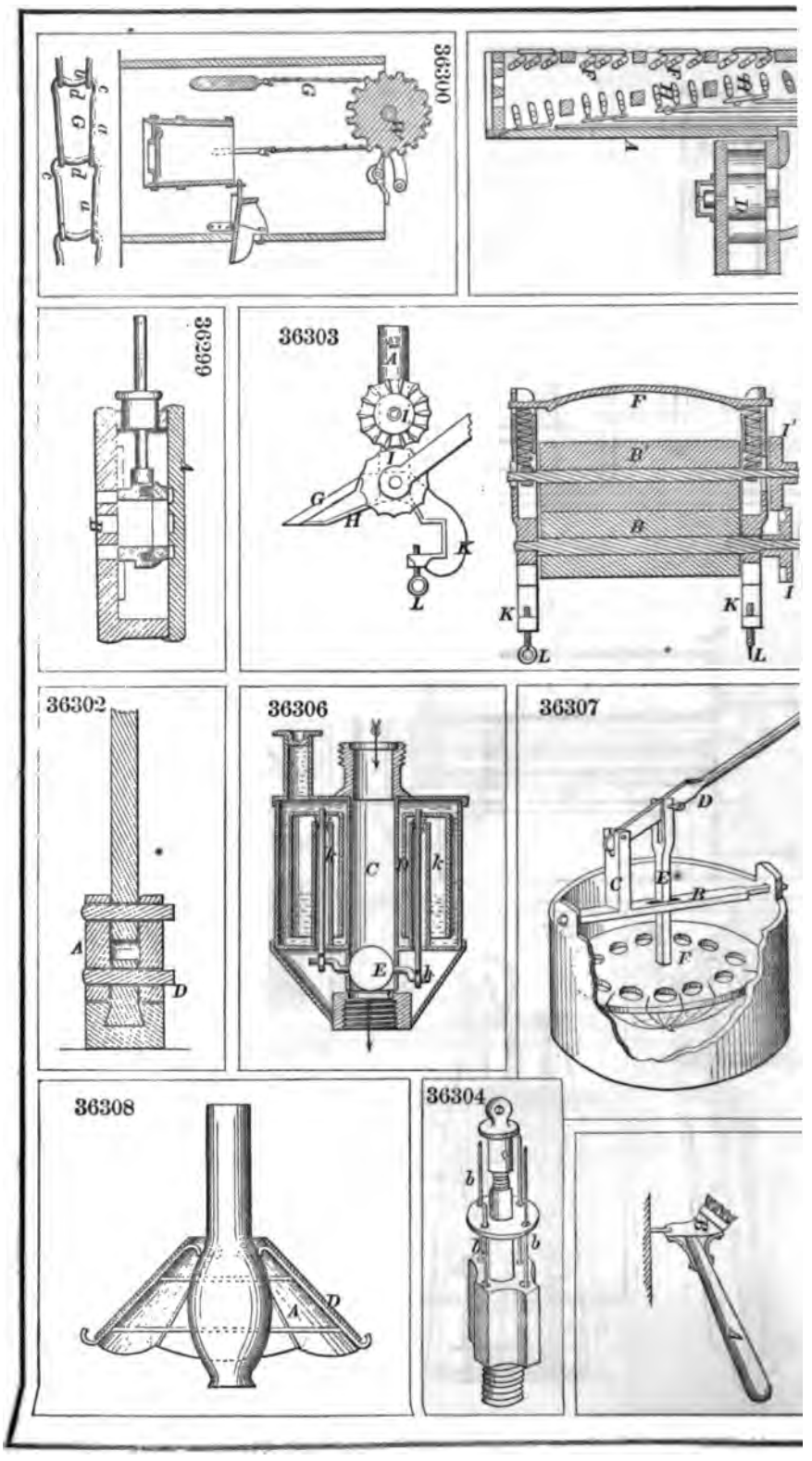
36300
36299
36303
36302
36306
36307
36308
36304

36310

36311

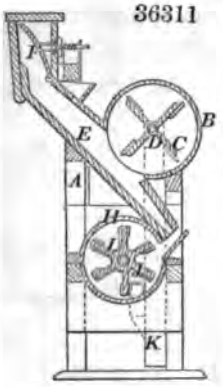

36312

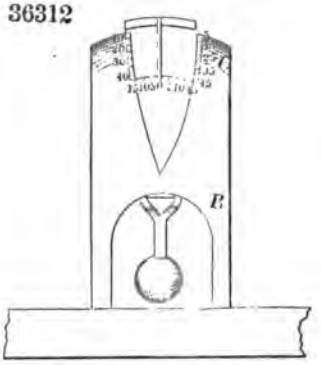

36313

36314

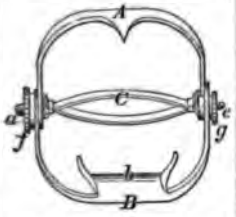

36315

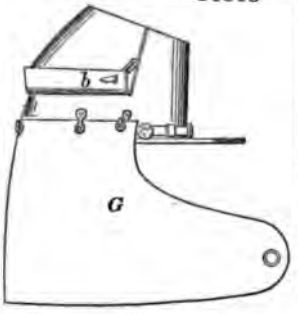

36316

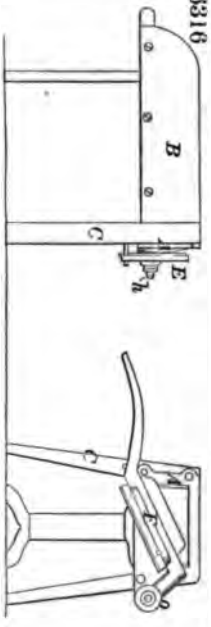

36317

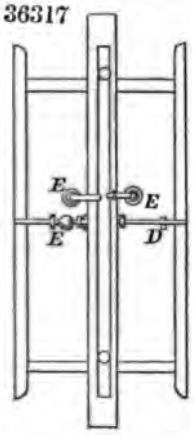

36319

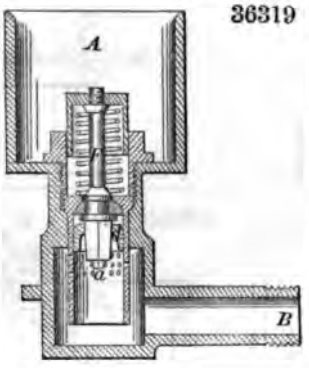

36318

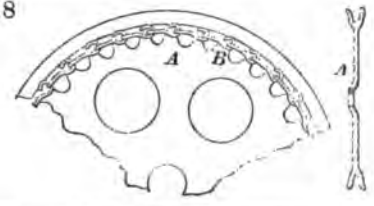

36320

36321

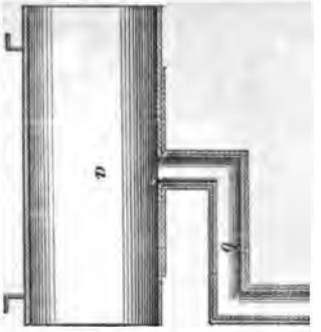

36323

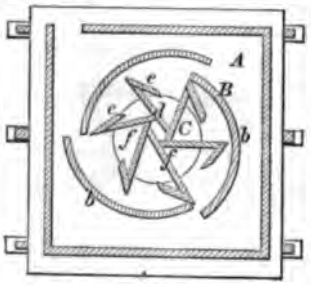

36324

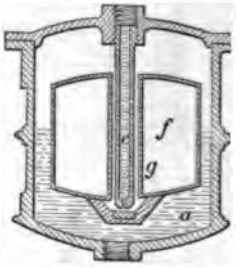

36329

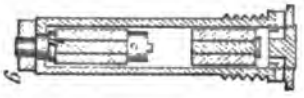

36328

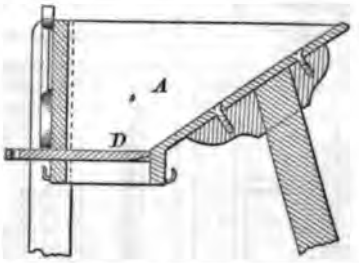

36327

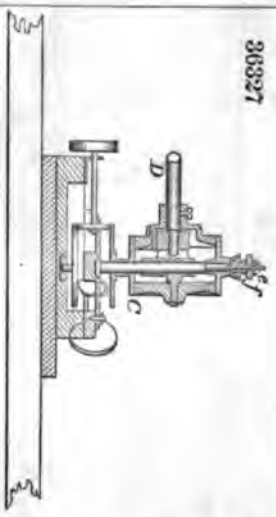

36320

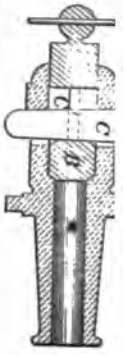

36331

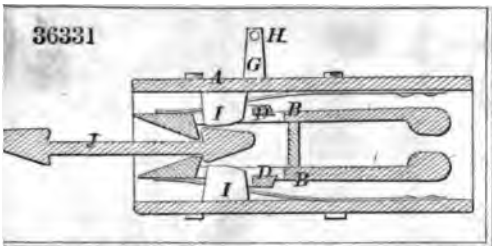

36332

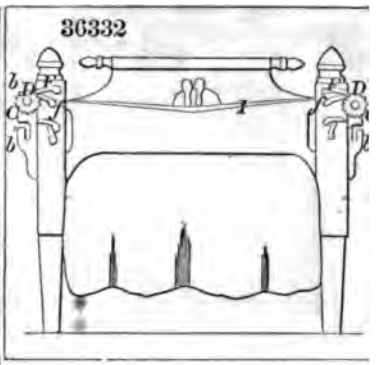

36334

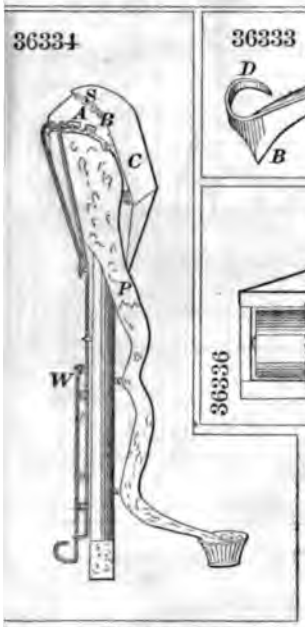

36333

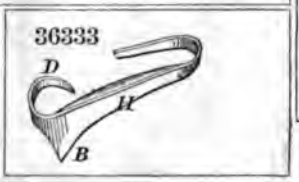

36336

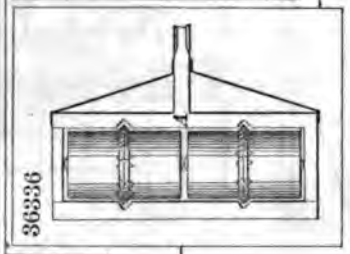

36335

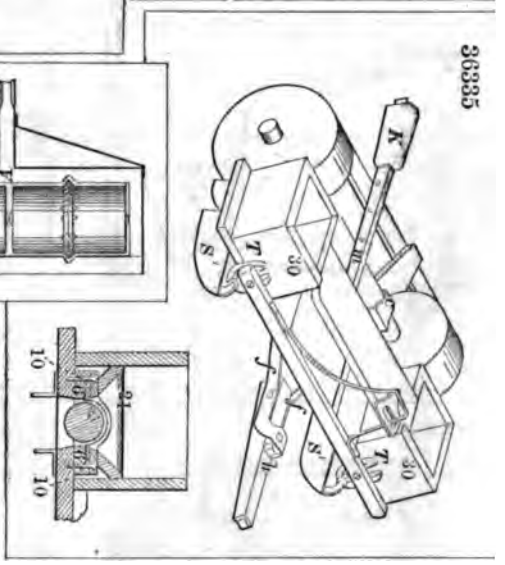

36337

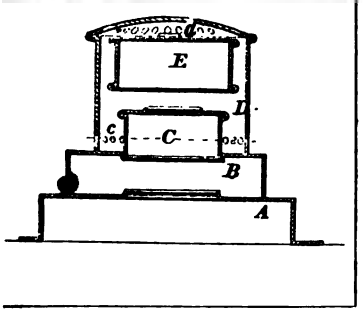

36339

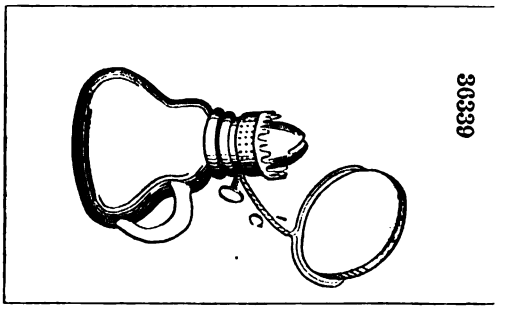

36340

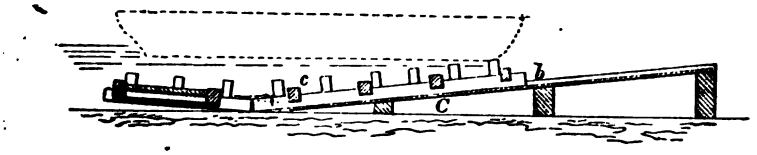

36341

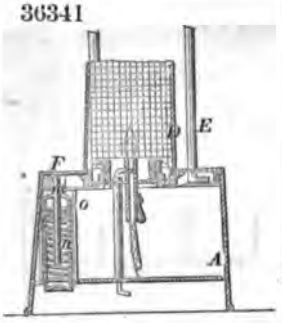

36342

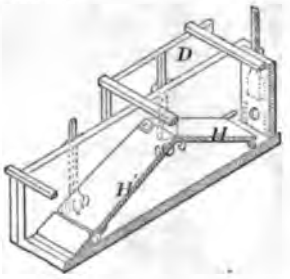

36343

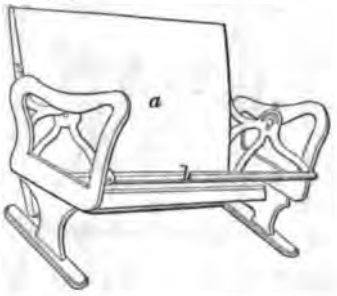

36344

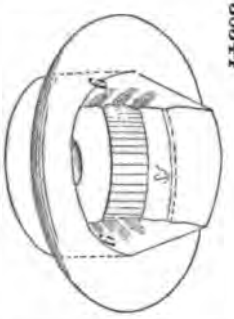

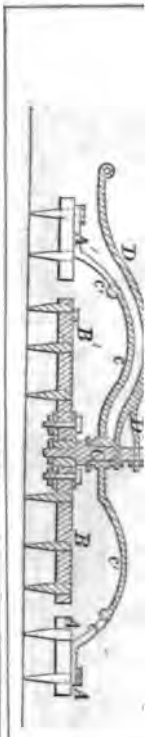

36346

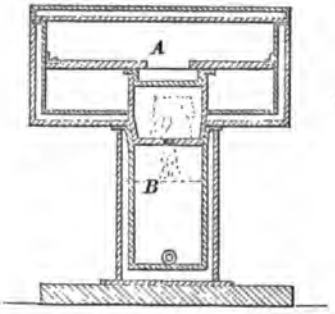

36348

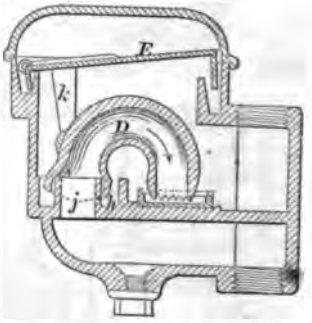

36349

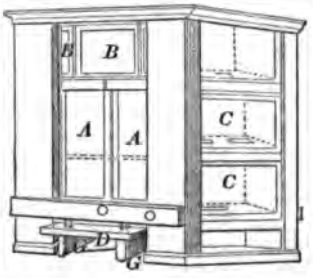

36347

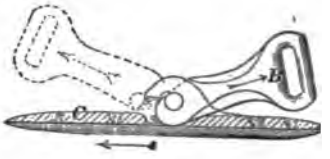

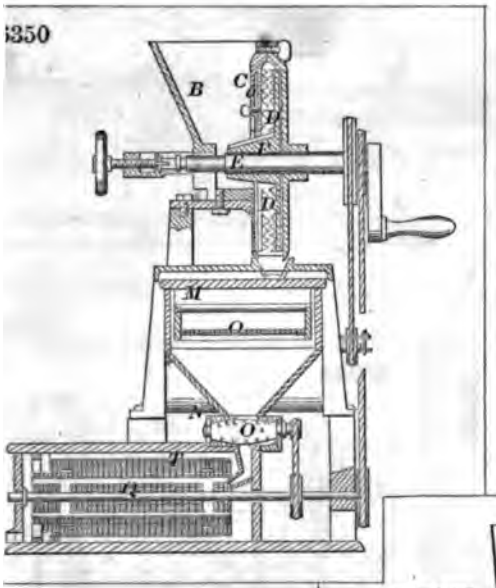
36350

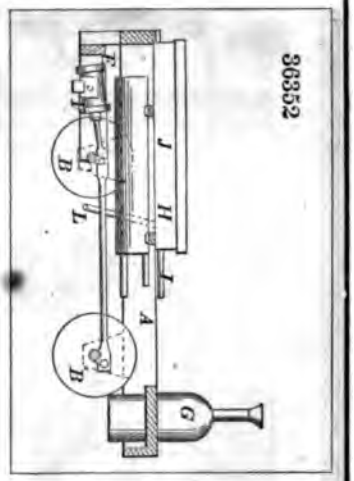
36352

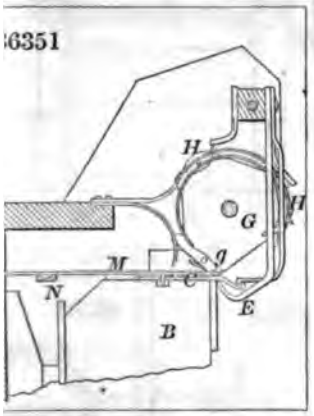
36351

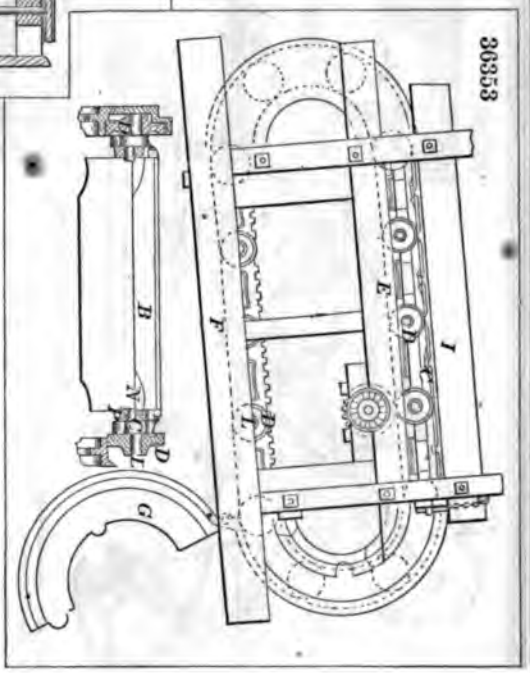
36353

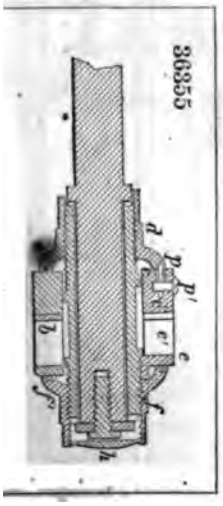
36355

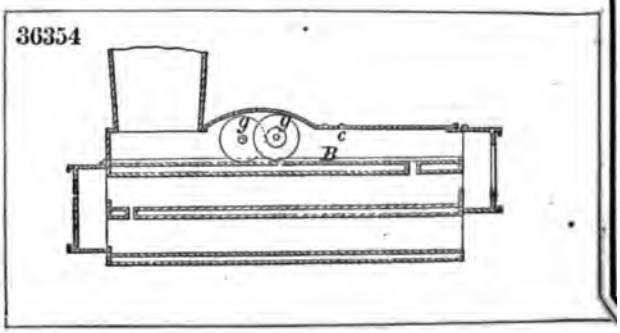
36354

36358

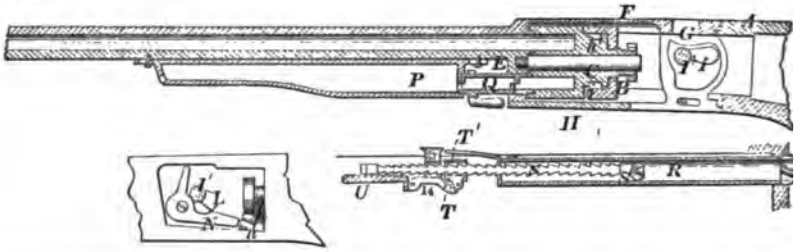

36360

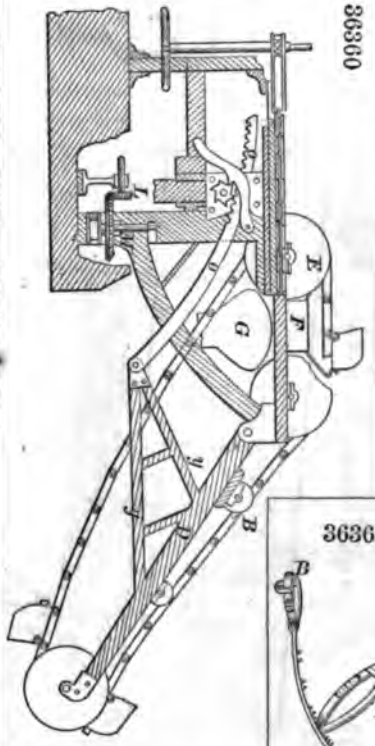

36362

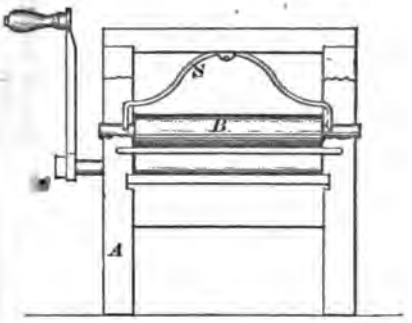

36363

36365

36364

36359

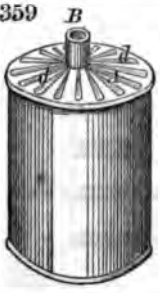

36361

36366

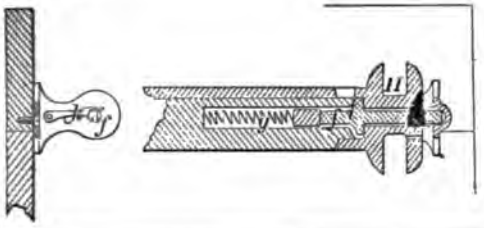

36367

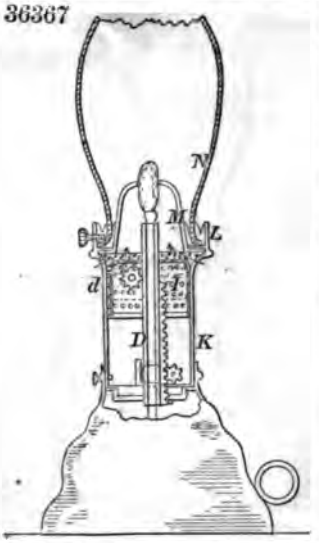

36370

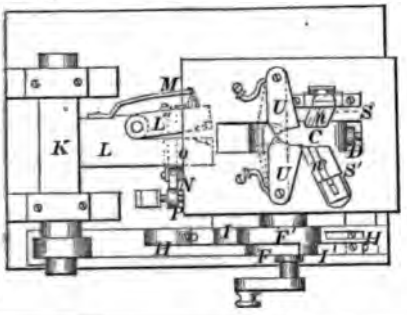

36372

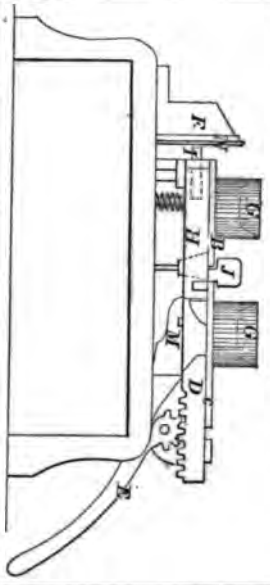

36369

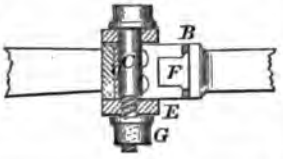

36371

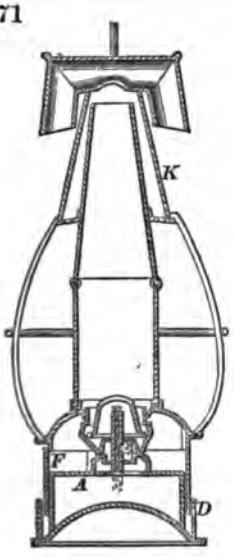

36373

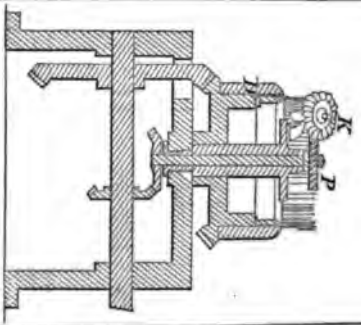

36374

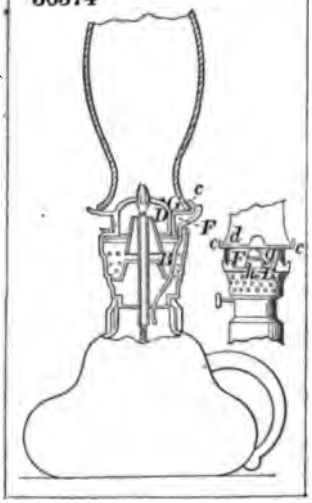

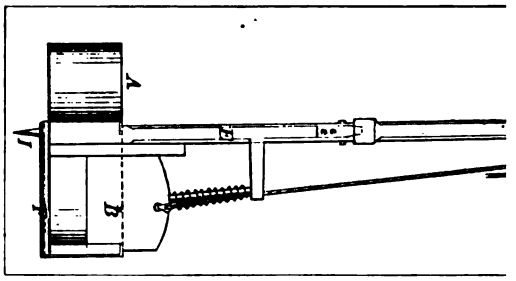

36377

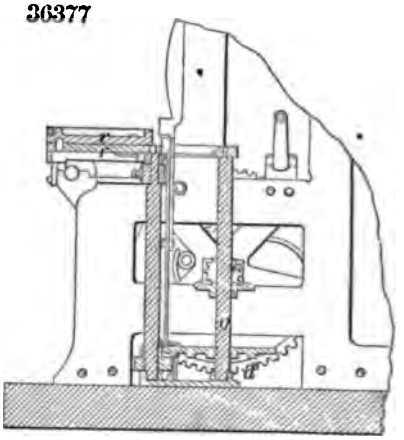

36376

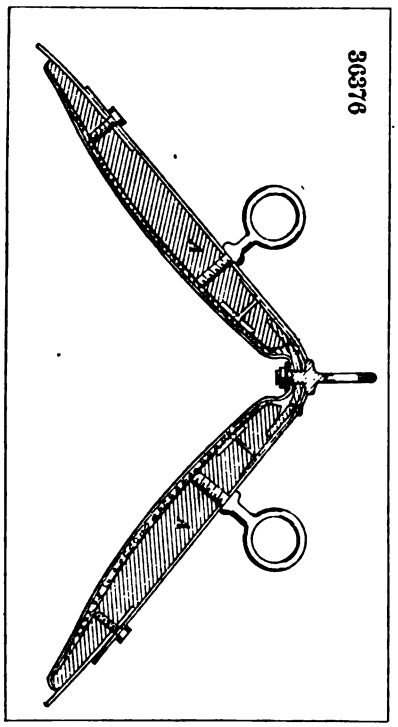

36378

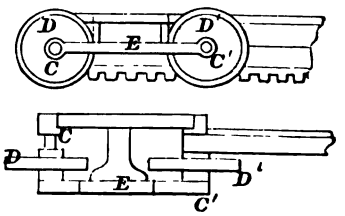

36379

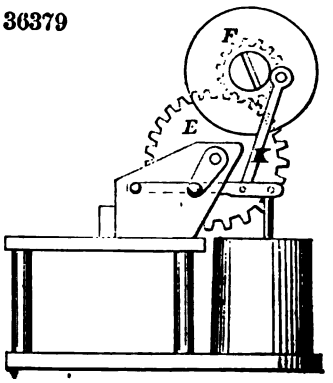

36380

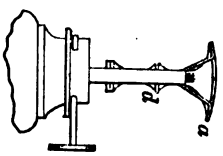

36381

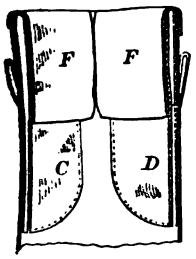

36383

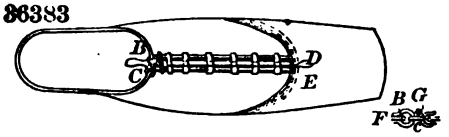

36385

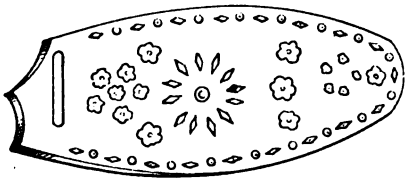

36382

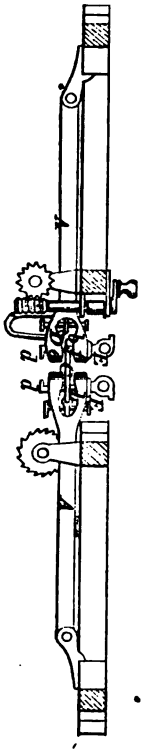

36386

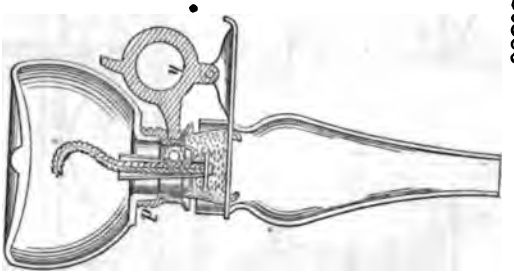

36387

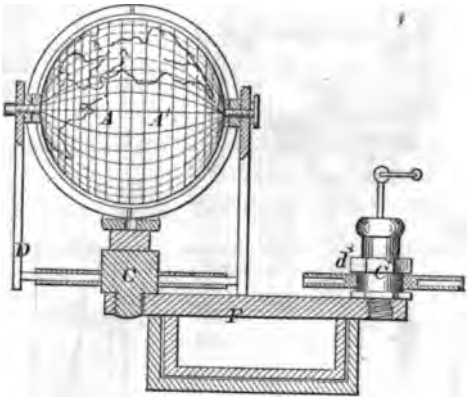

36384

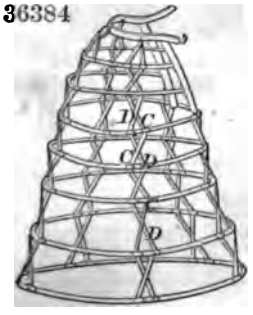

36388

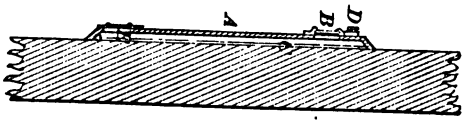

36389

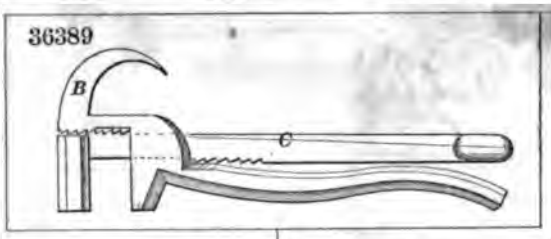

36391

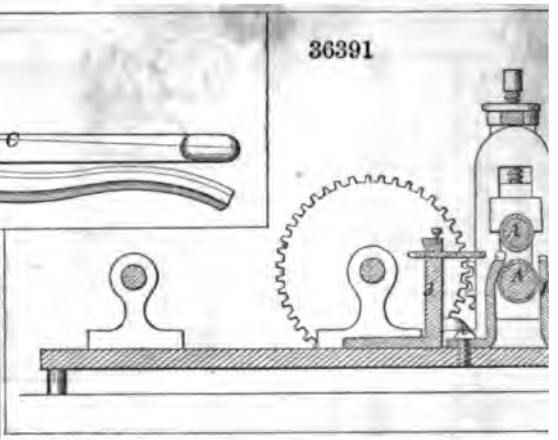

36393

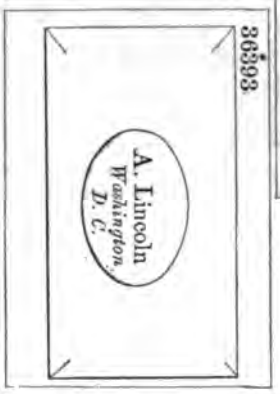

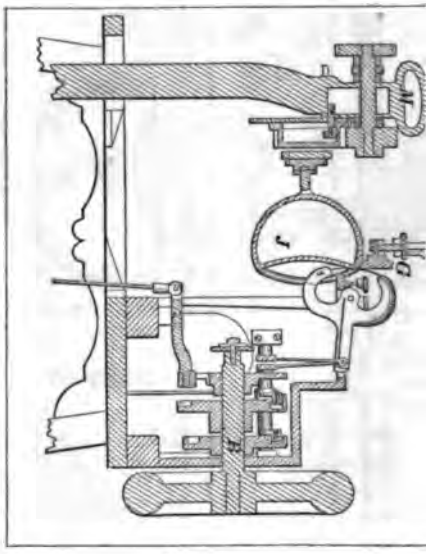

36392

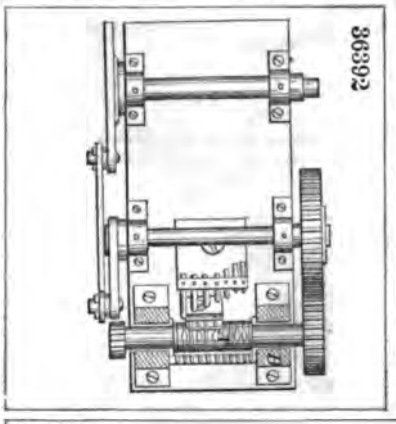

36395

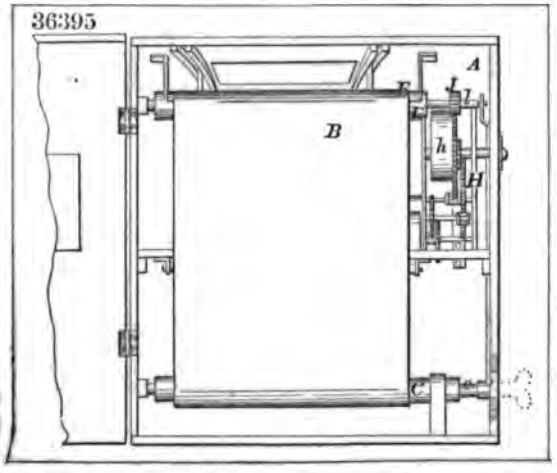

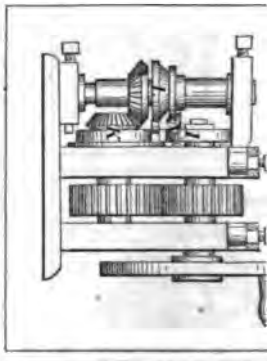

36394

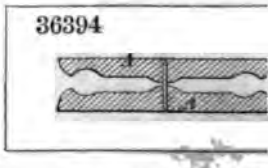

36397

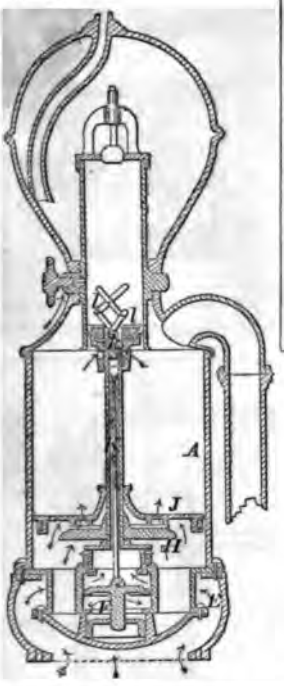

36398

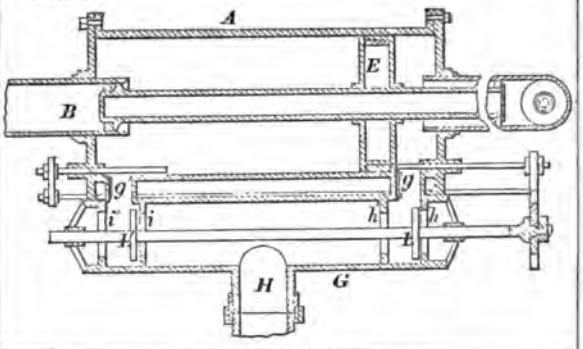

36400

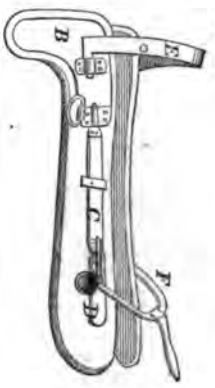

36401

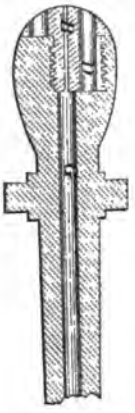

36402

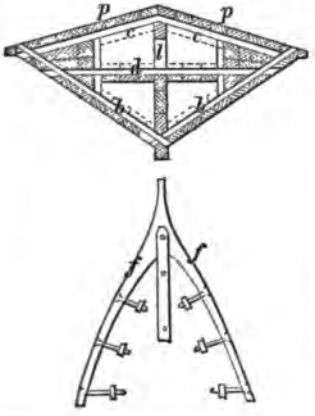

36403

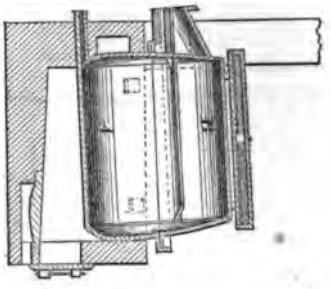

36404

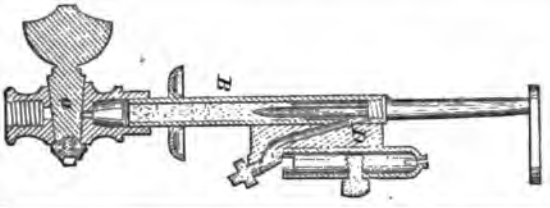

36405

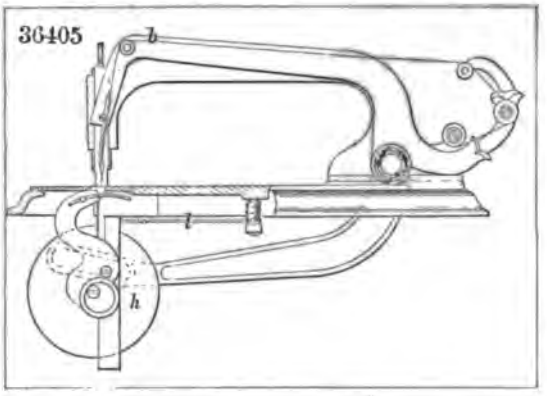

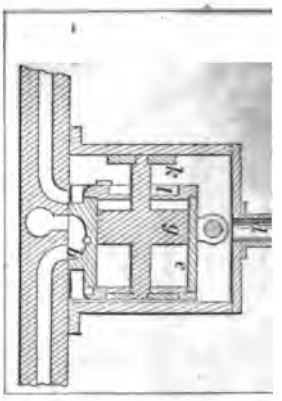

36408

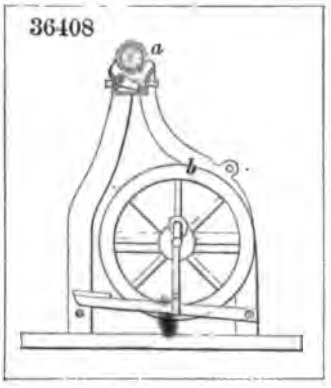

36409

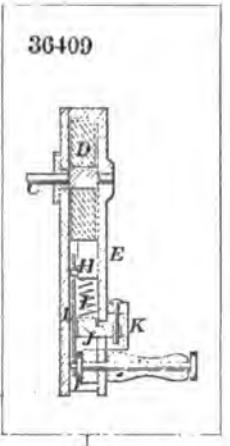

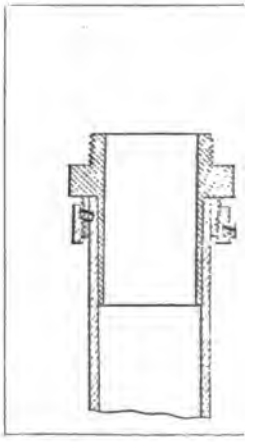

36412

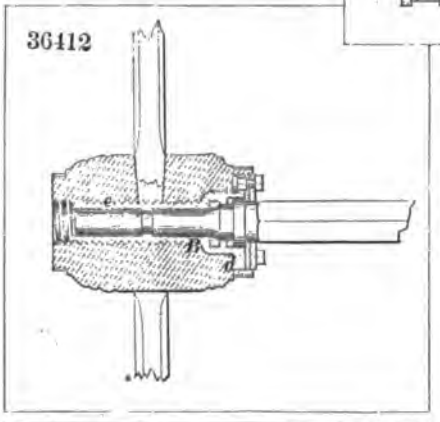

36413

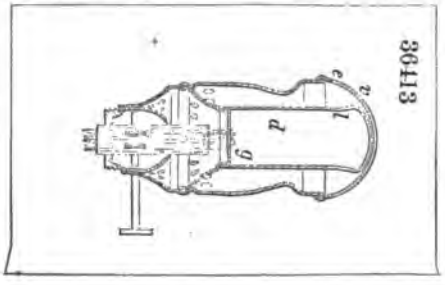

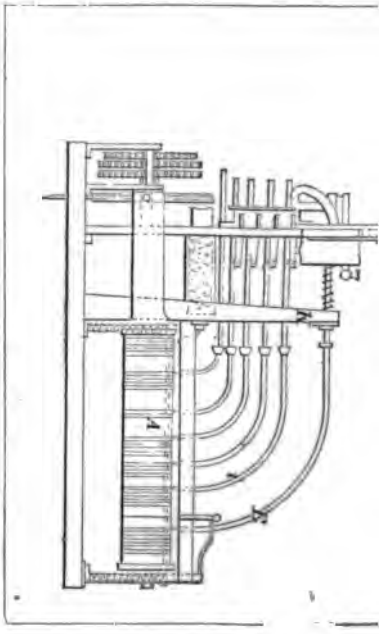

36415

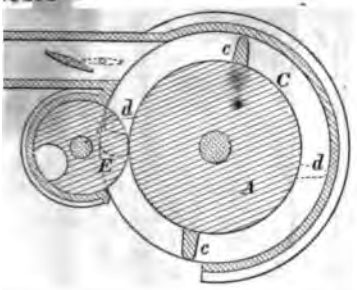

36417

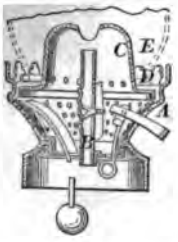

36416

36418

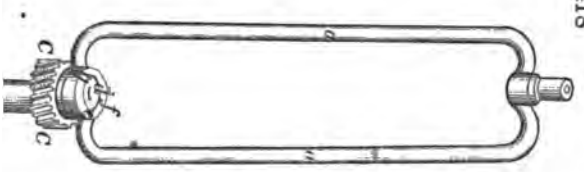

36420

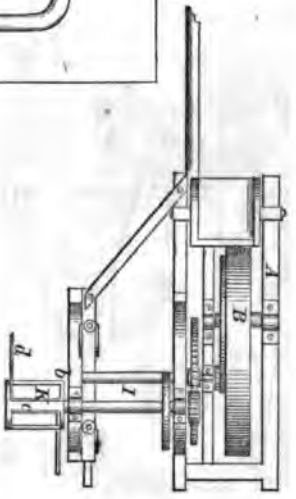

36422

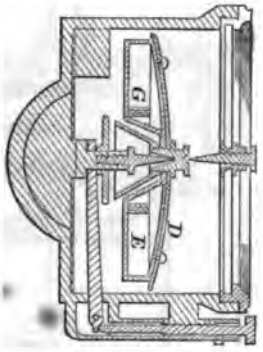

36421

36423

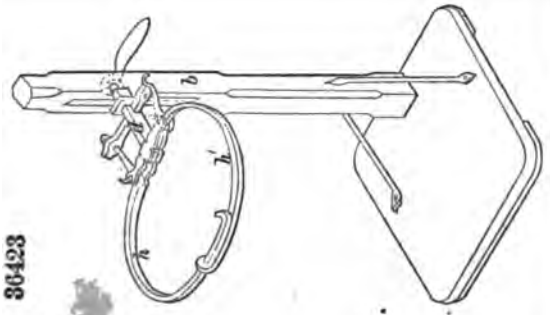

36425

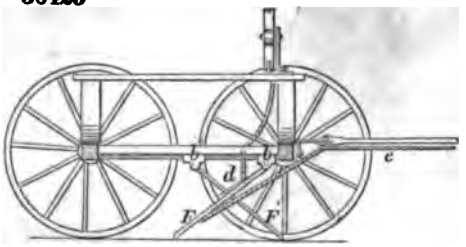

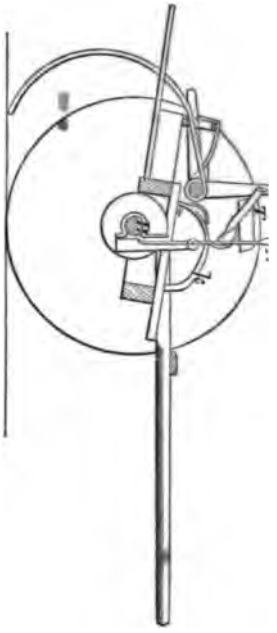

36427

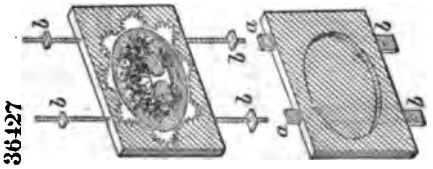

36428

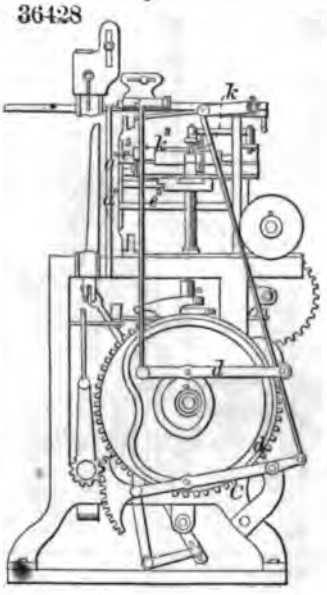

36429

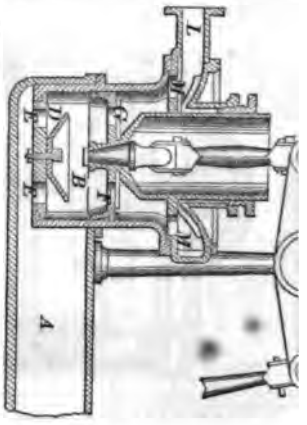

36430

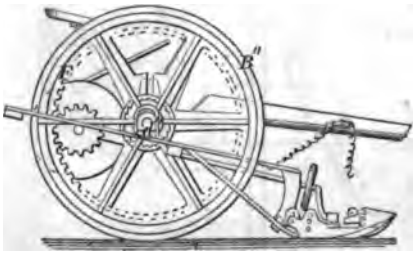

36432

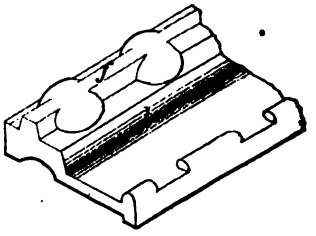

36433

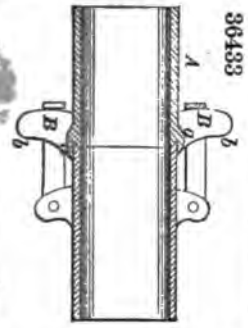

36434

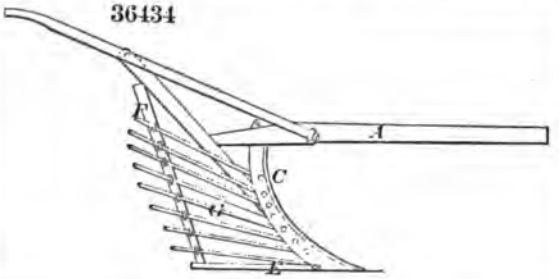

36435

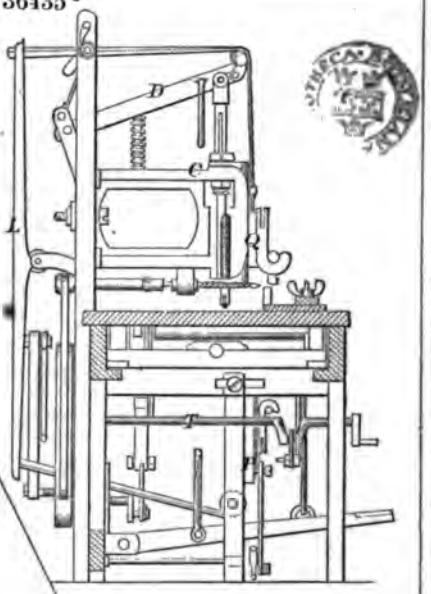

36436

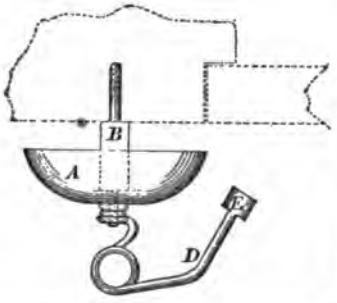

36437

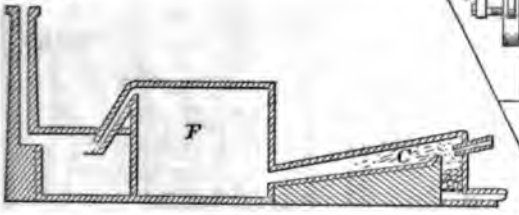

36439

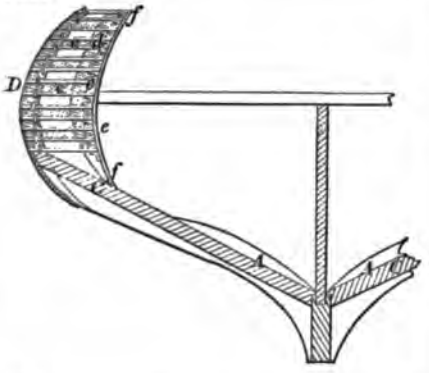

36438

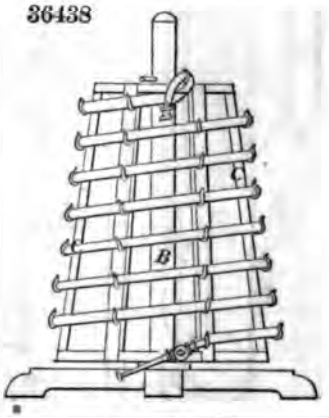

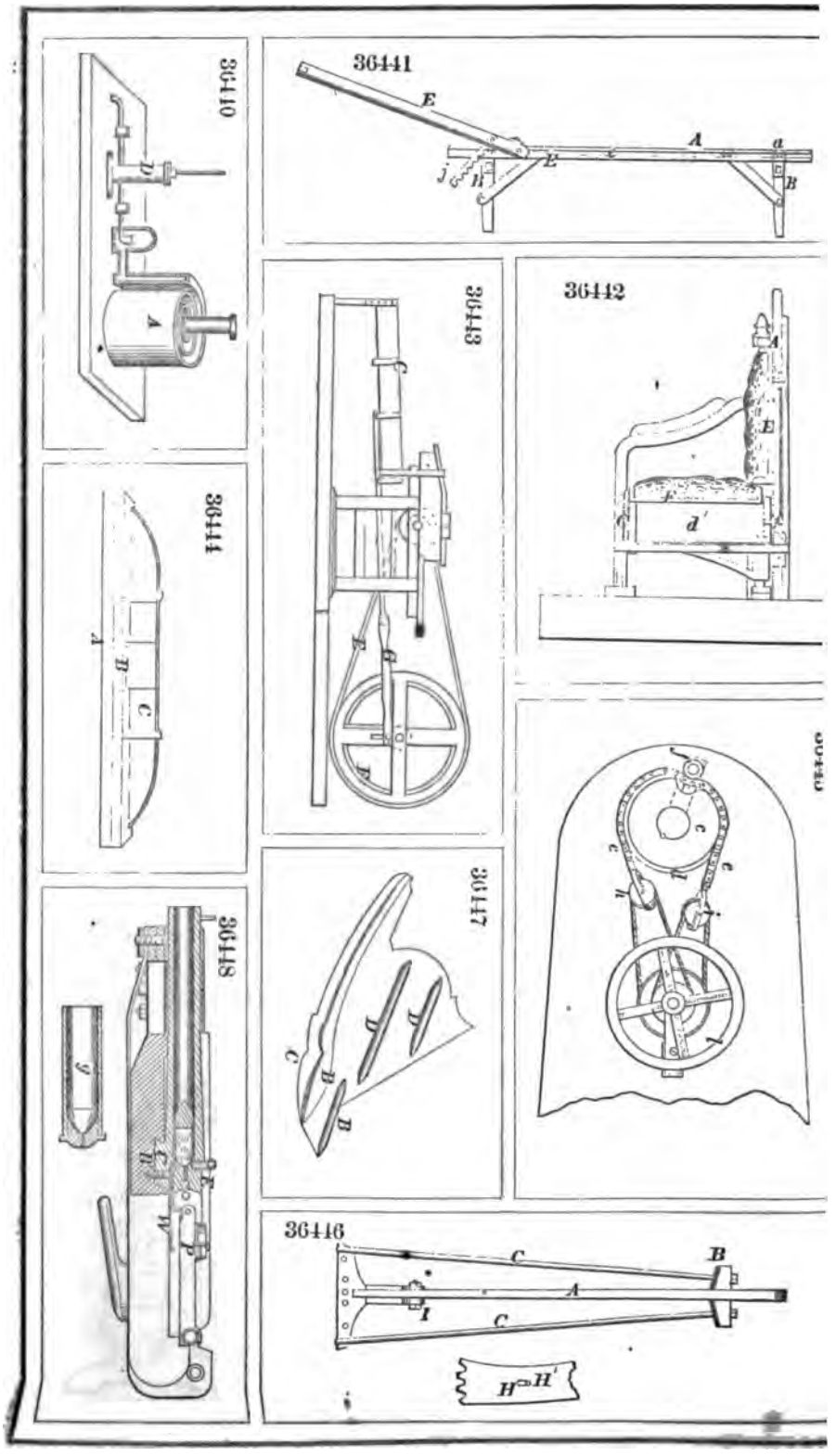
36441
36442
36443
36444
36445
36446
36447
36448
36449

36449

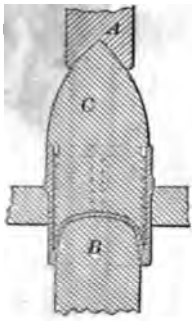

36450

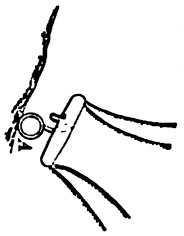

36451

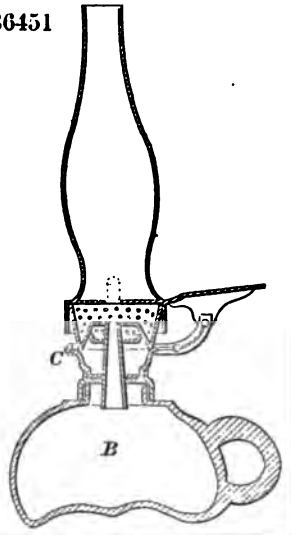

36455

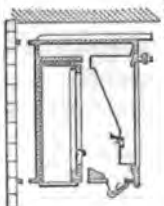

36452

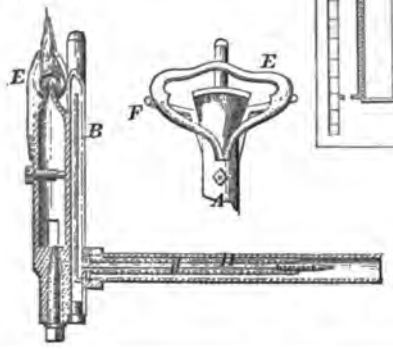

36457

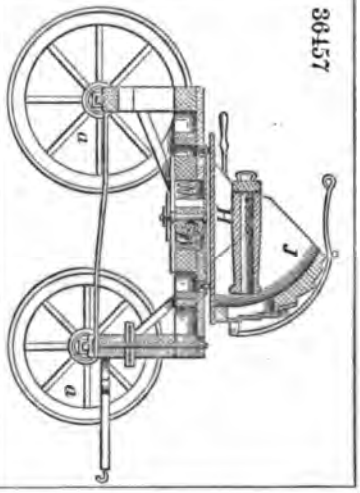

36459

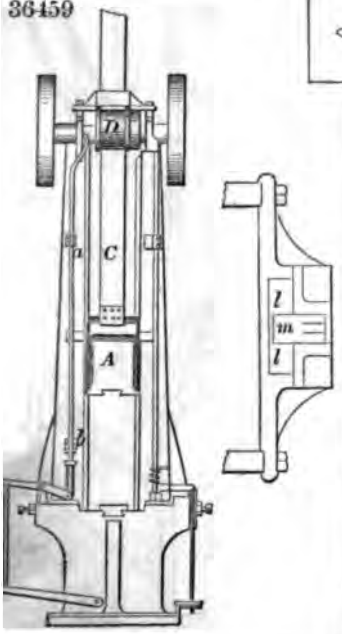

36454

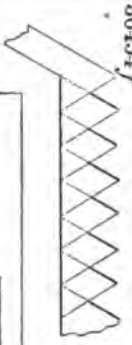

36458

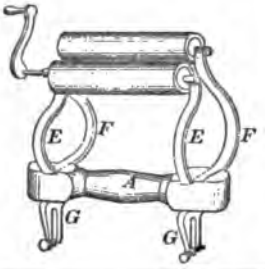

36456

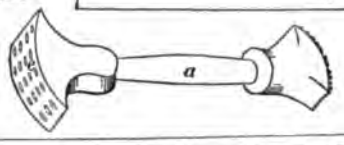

36460

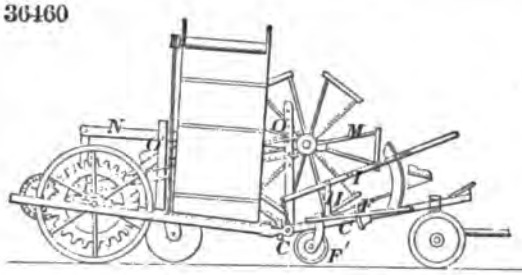

36462

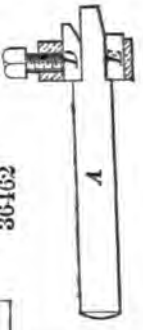

36463

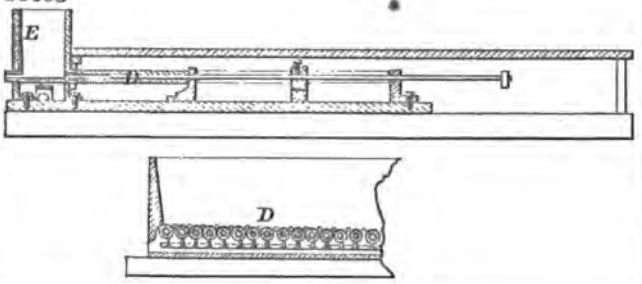

36465

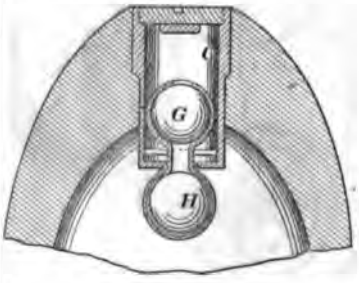

36466

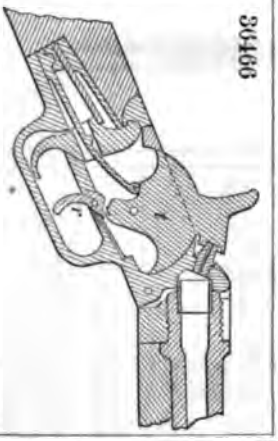

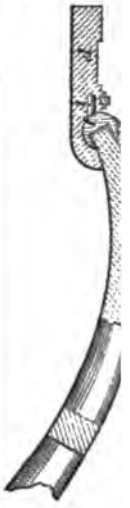

36464

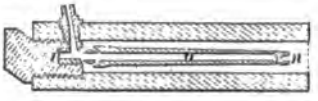

36467

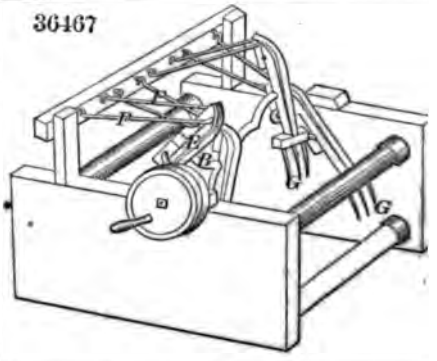

36468

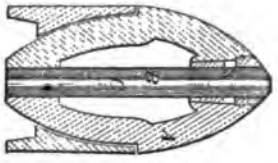

36469

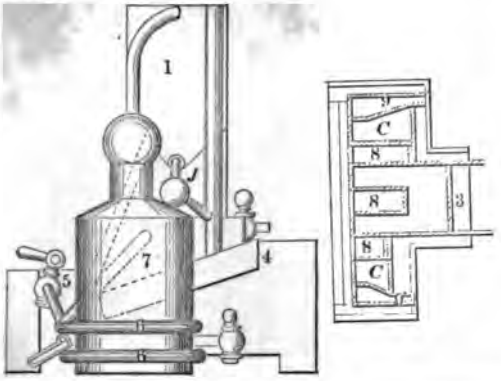

36470

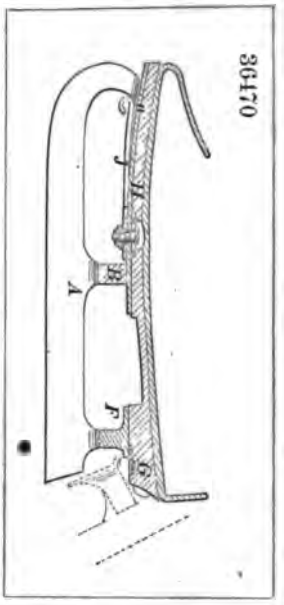

36471

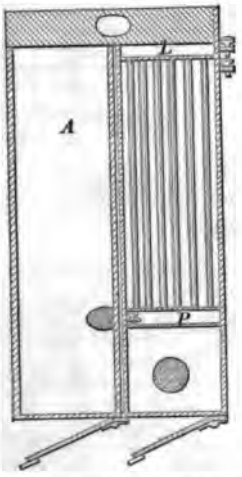

36472

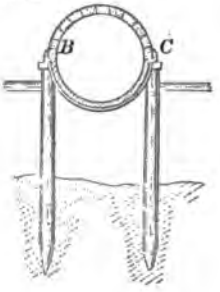

36475

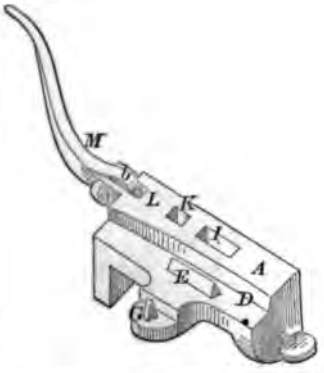

36473

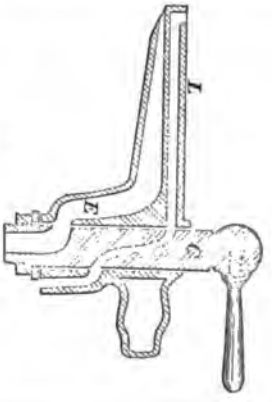

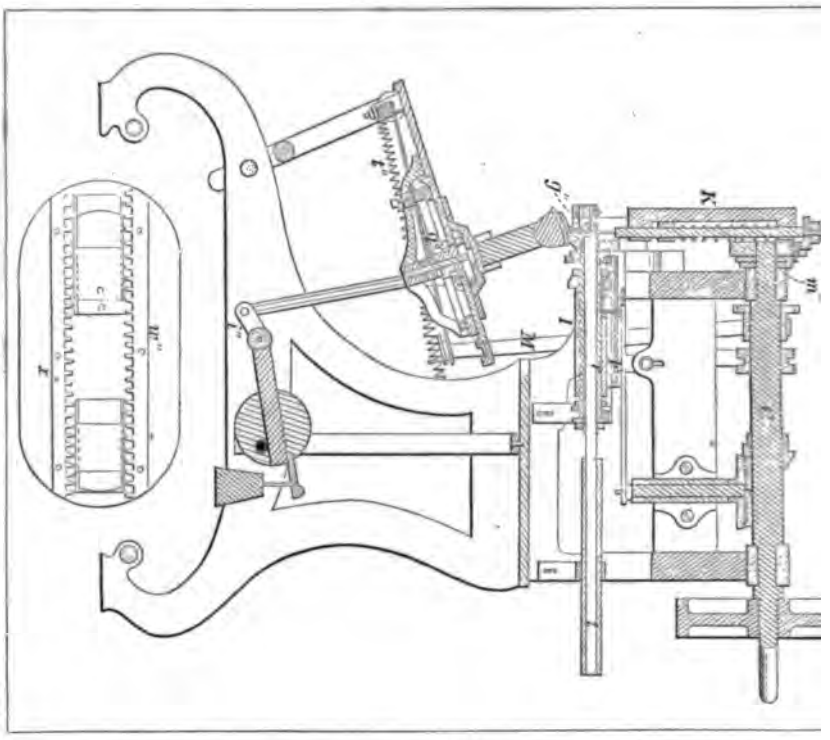

36478

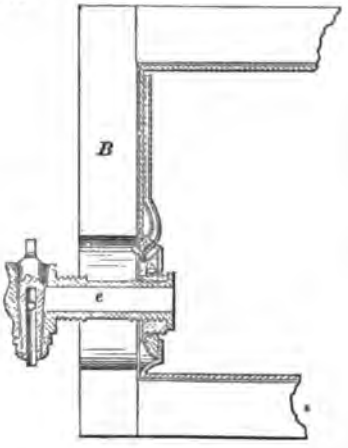

36479

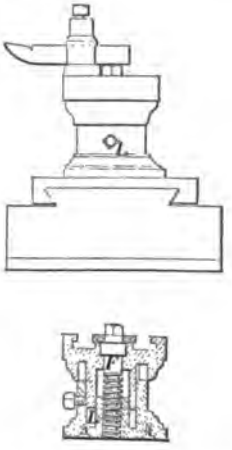

36477

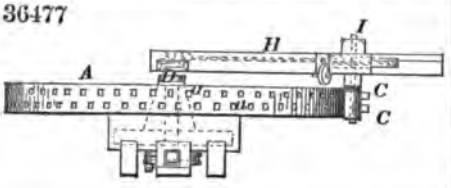

36480

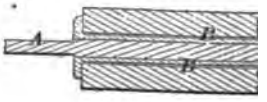

36481

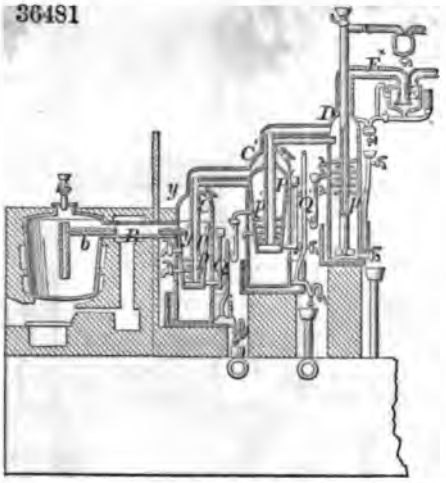

36482

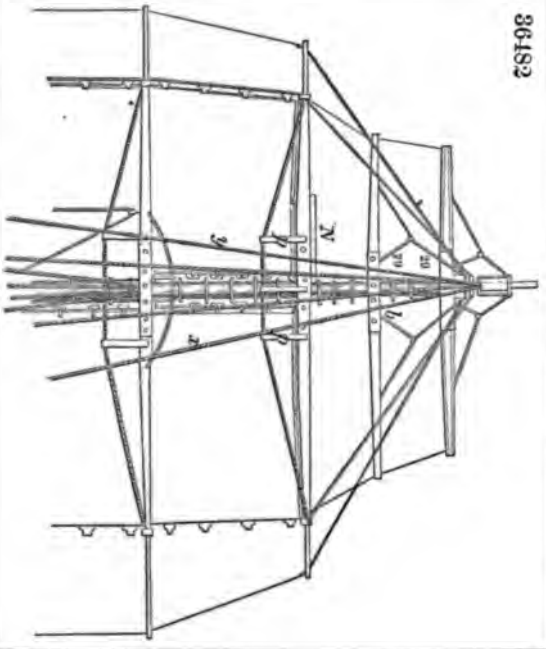

36483

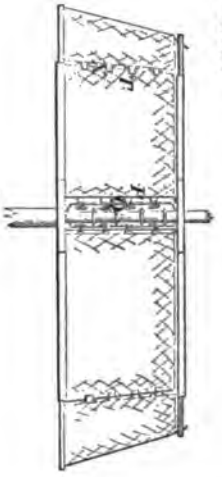

36484

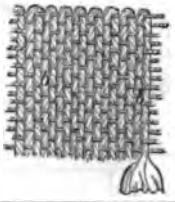

36485

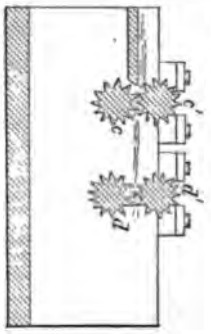

36486

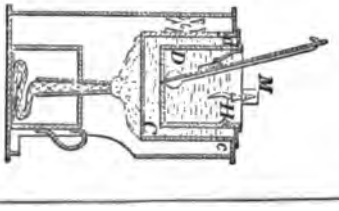

36487

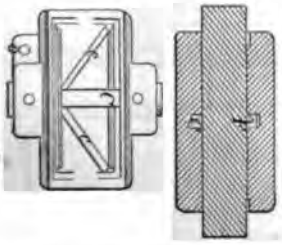

36489

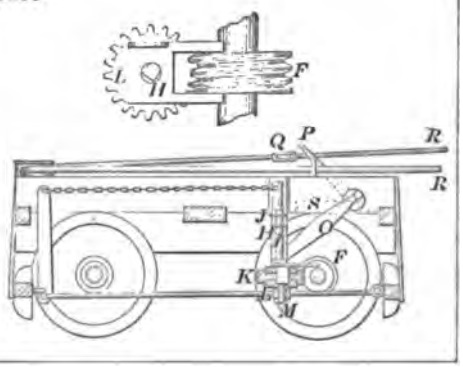

36

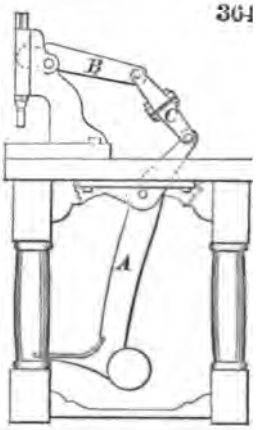

36493

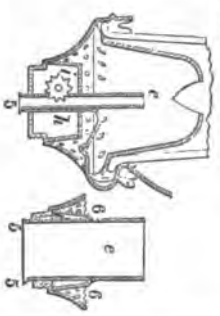

36490

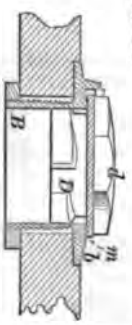

3649

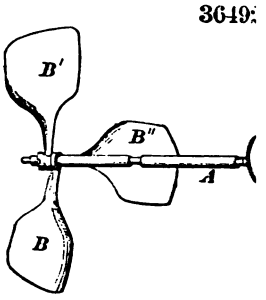

36495

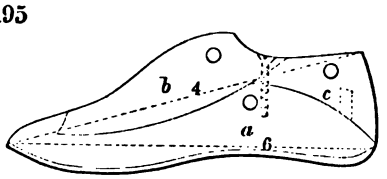

36497

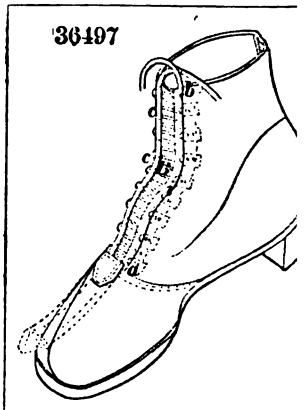

36494

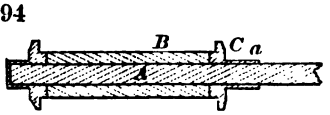

36496

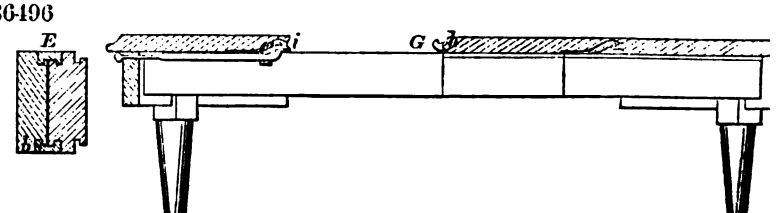

36498

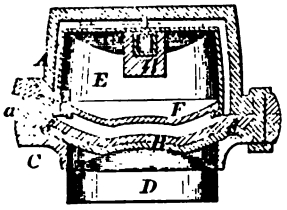

36500

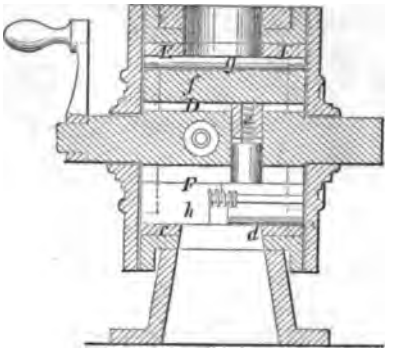

36501

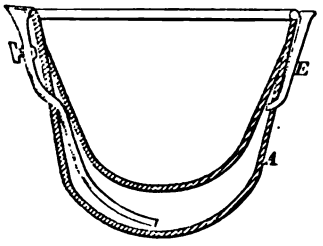

36503

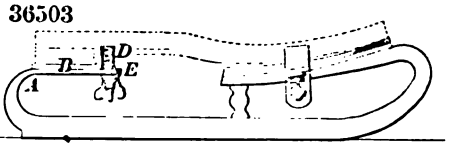

36504

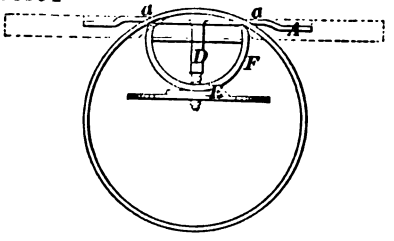

36505

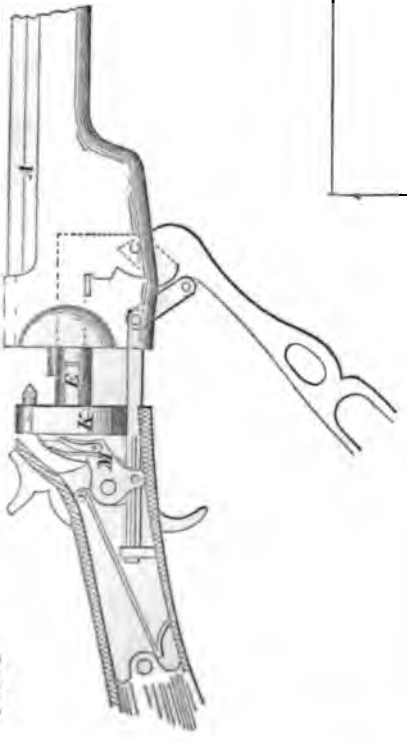

36502

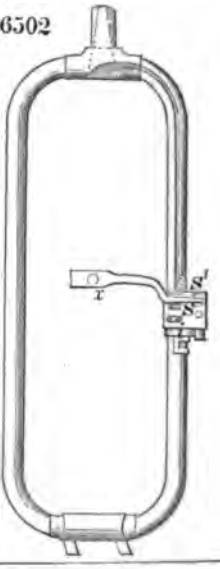

36506

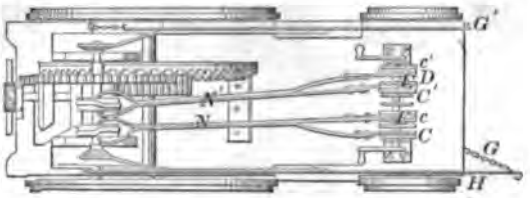

36508

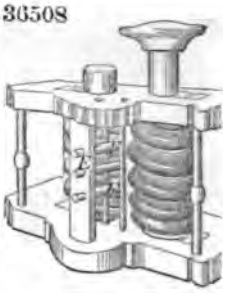

36509

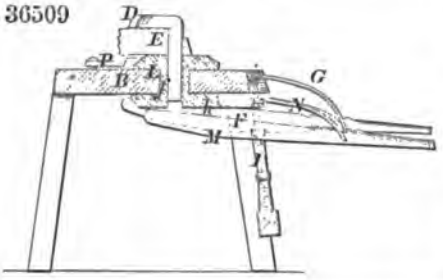

36510

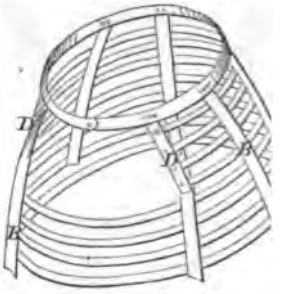

36511

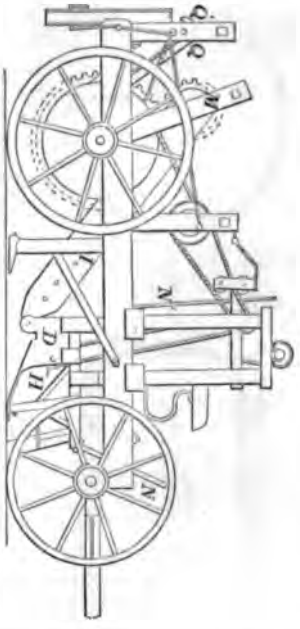

36512

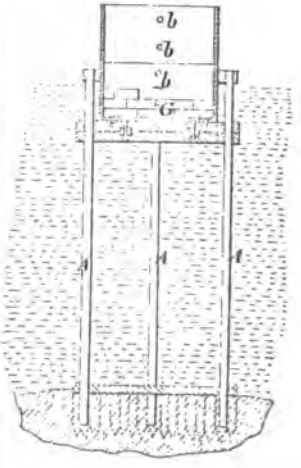

36507

36518

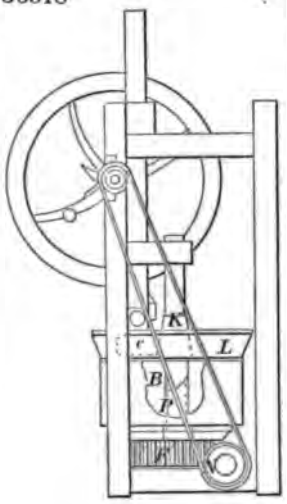

36517

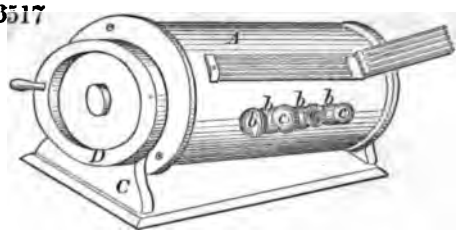

36514

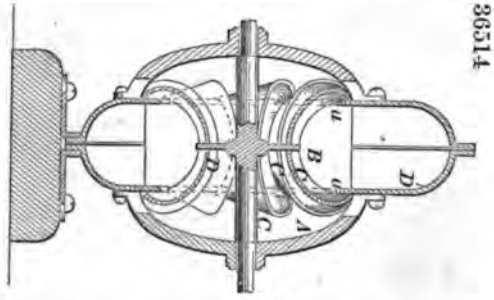

36519

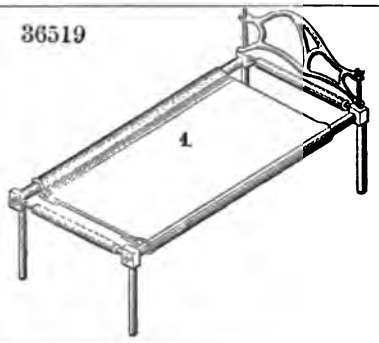

36513

36520

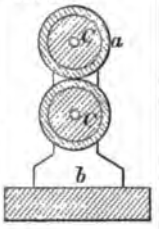

36521

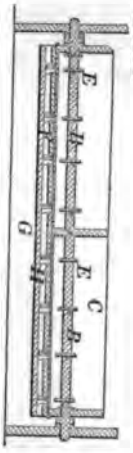

36523

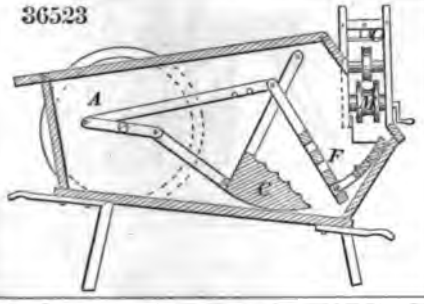

36522

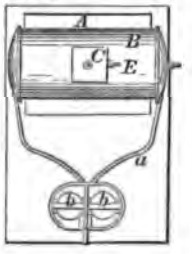

36524

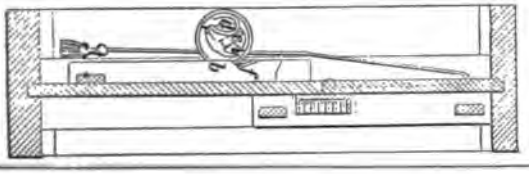

36525

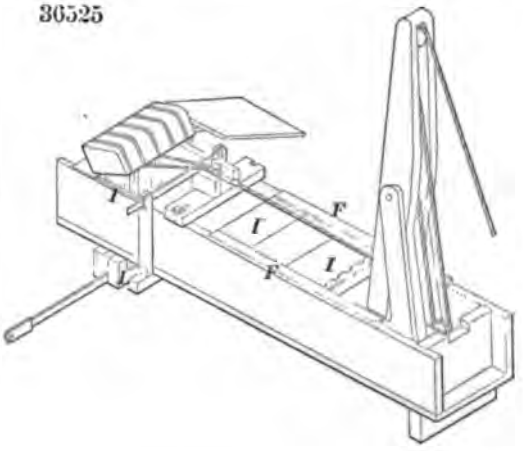

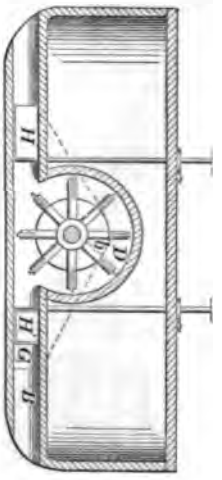

36527

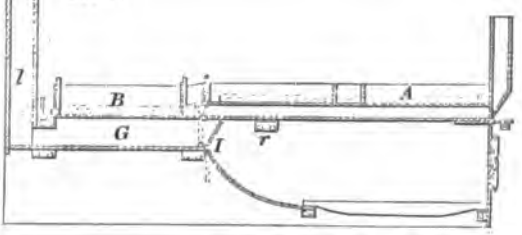

36528

36531

36530

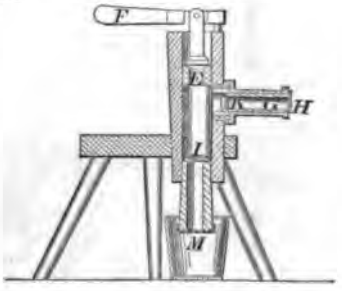

36529

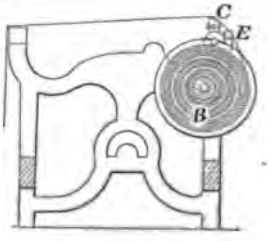

36532

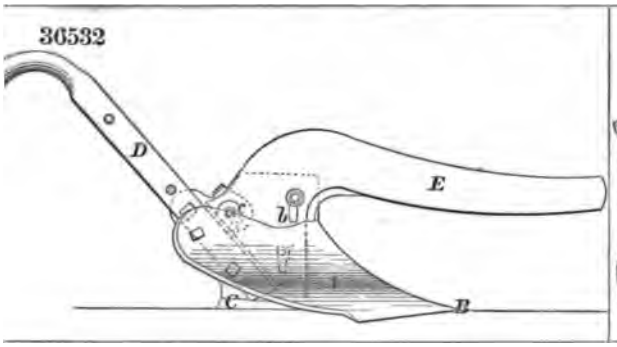

36534

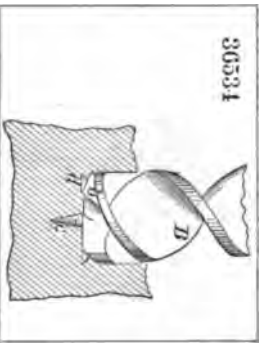

36536

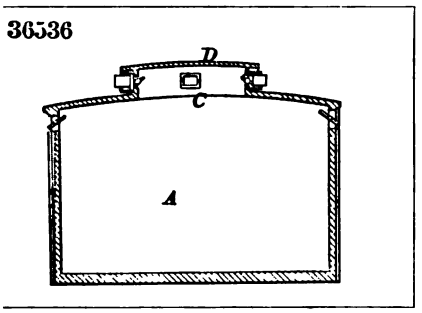

36533

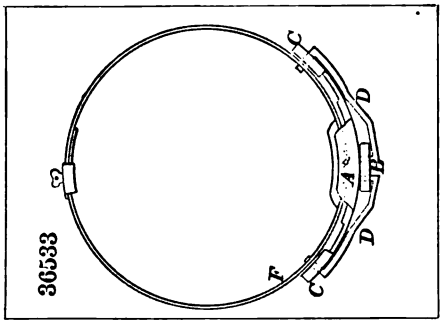

36537

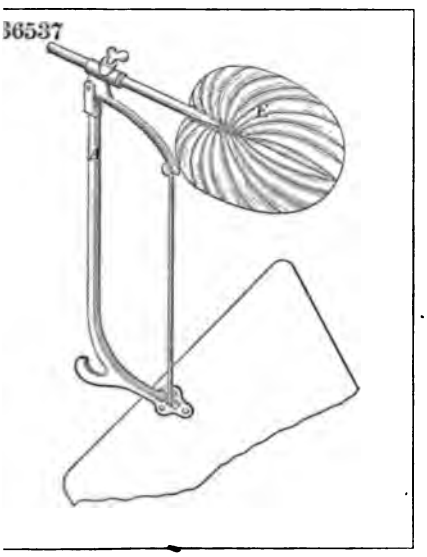

36538

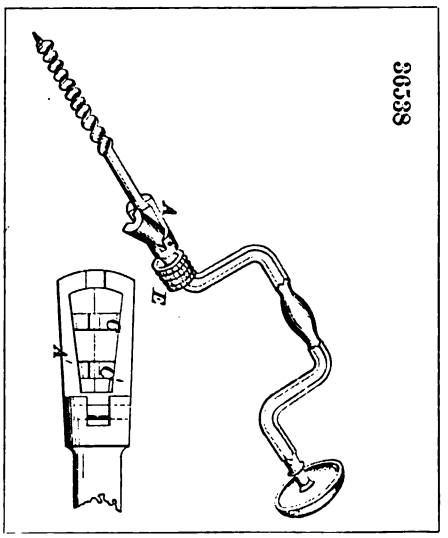

36535

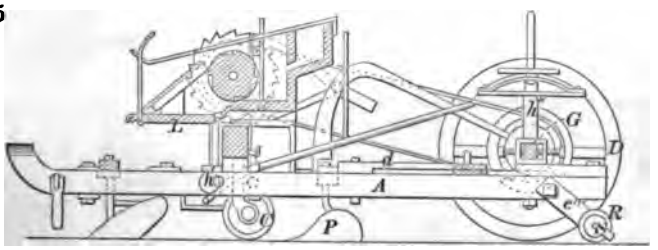

36539

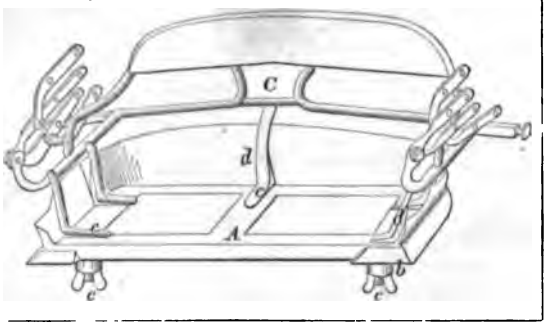

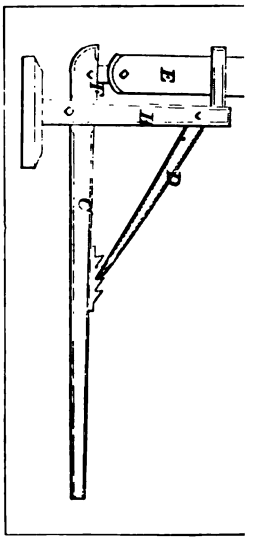

36541

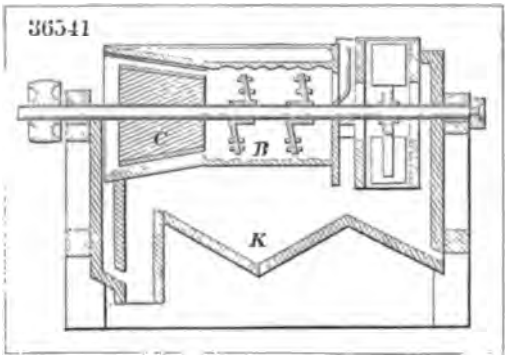

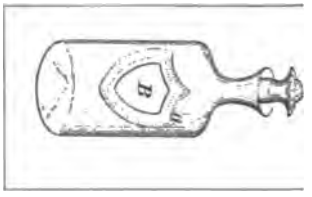

36545

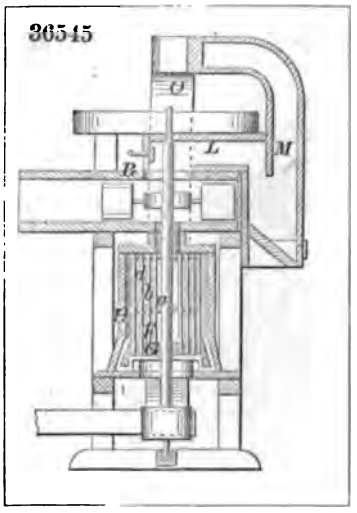

36544

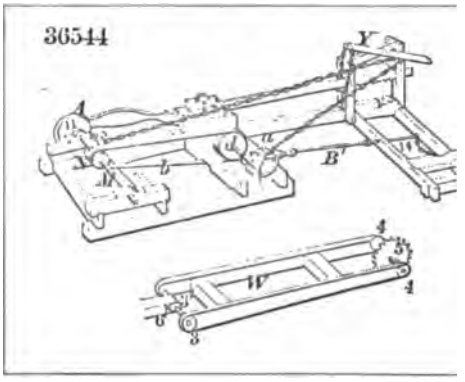

36543

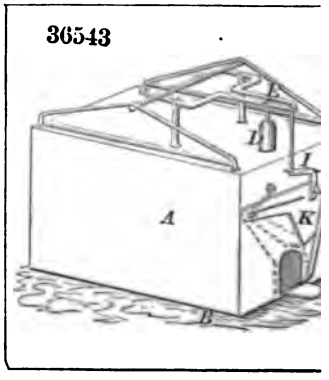

36546

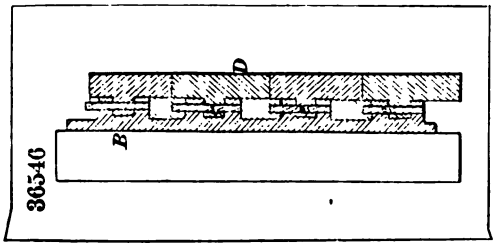

36547

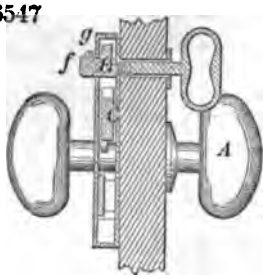

36548

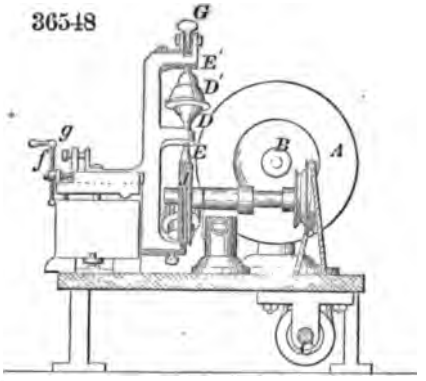

36549

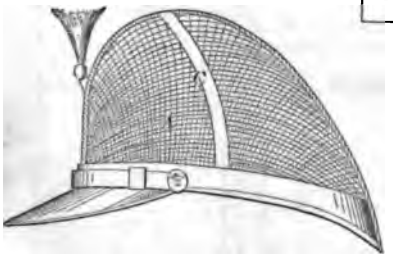

36551

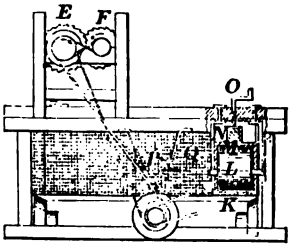

36552

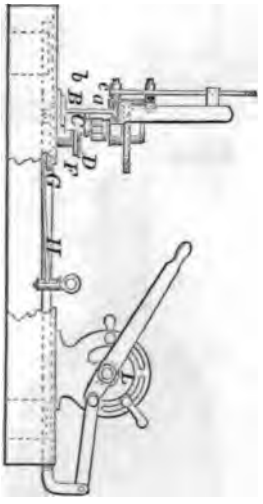

36550

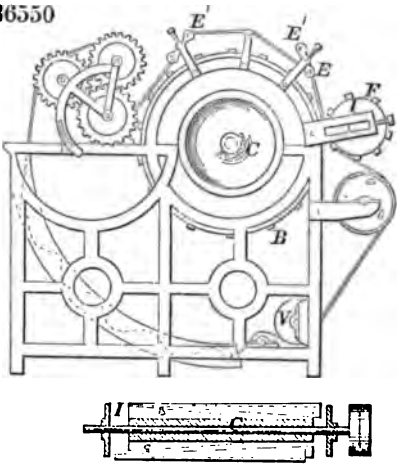

36553

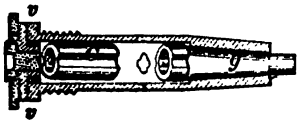

36554

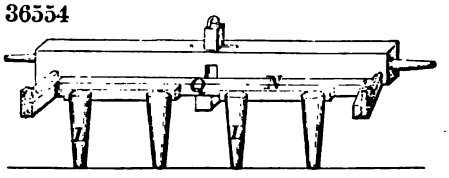

36555

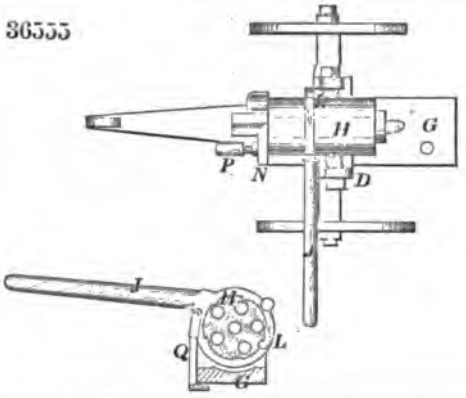

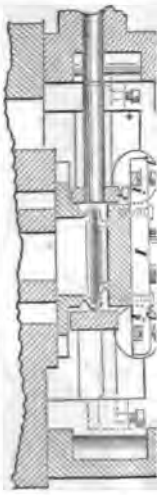

36558

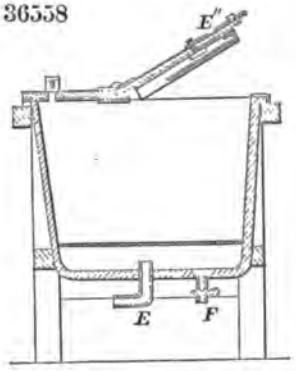

36557

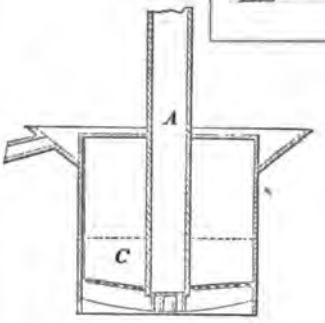

36559

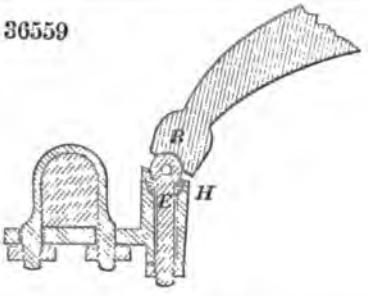

36560

36561

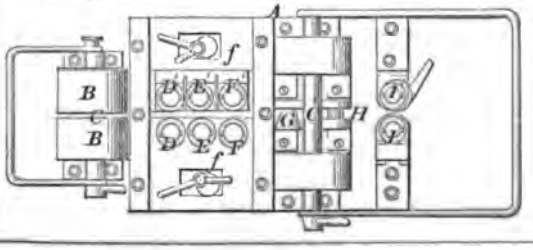

36562

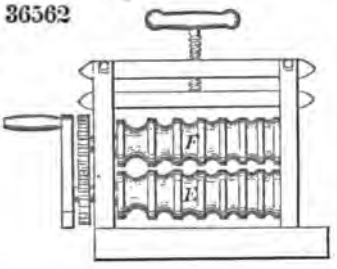

36563

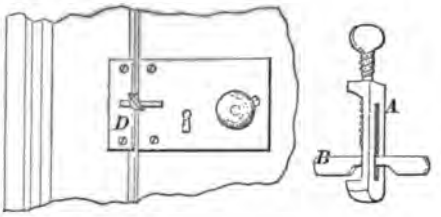

36565

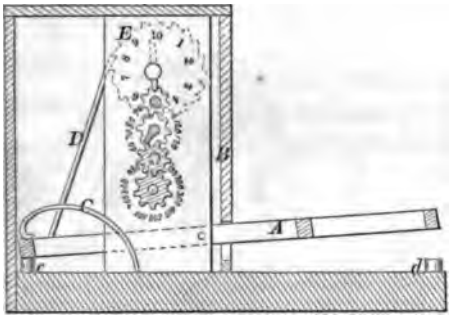

36567

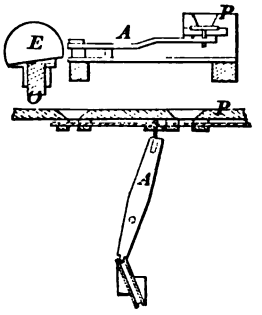

36566

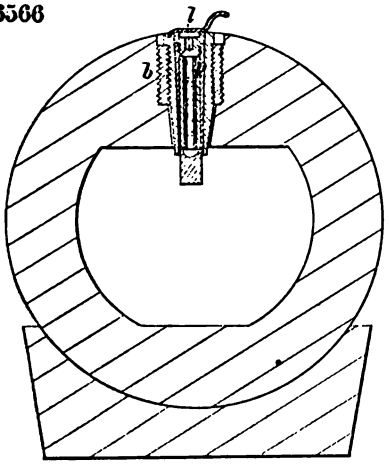

36568

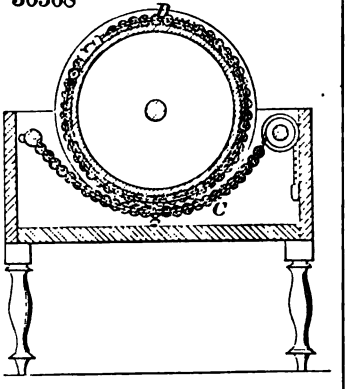

36564

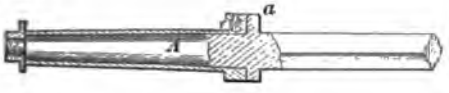

36569

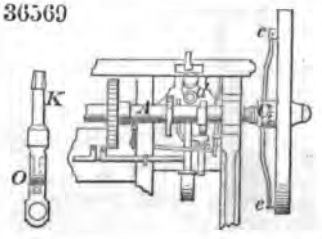

36570

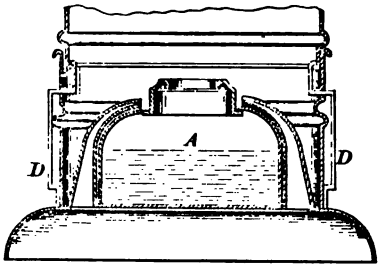

36572

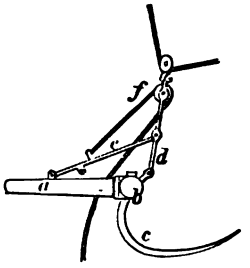

36576

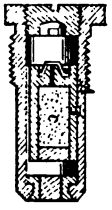

36571

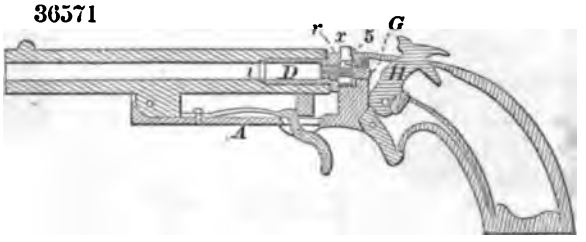

36574

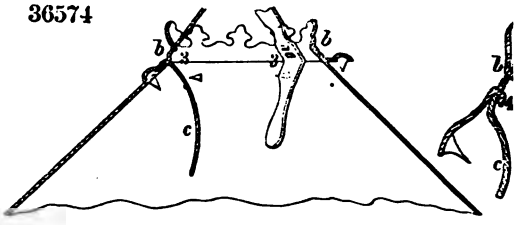

36573

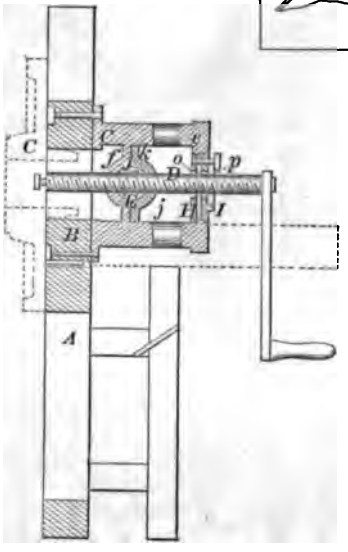

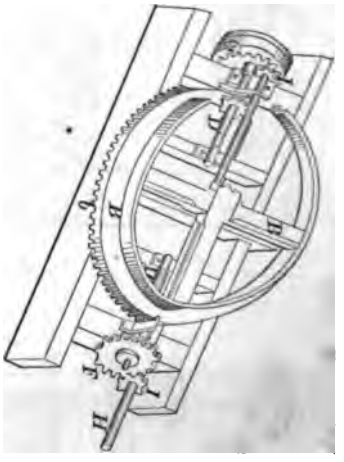

36579

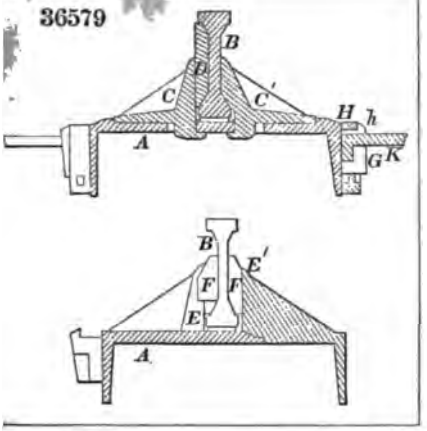

36578

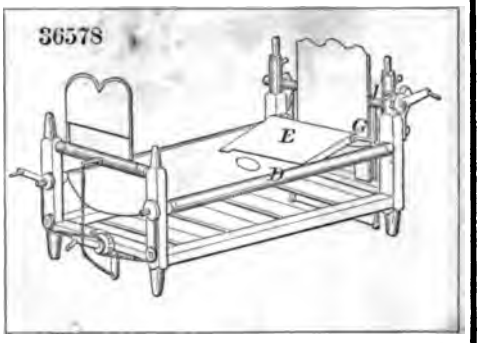

36577

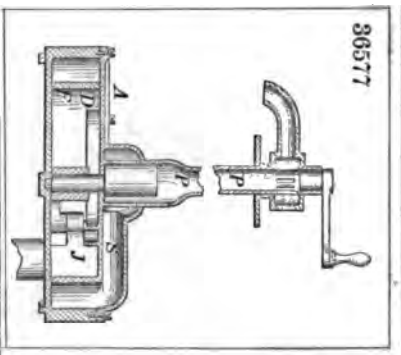

36580

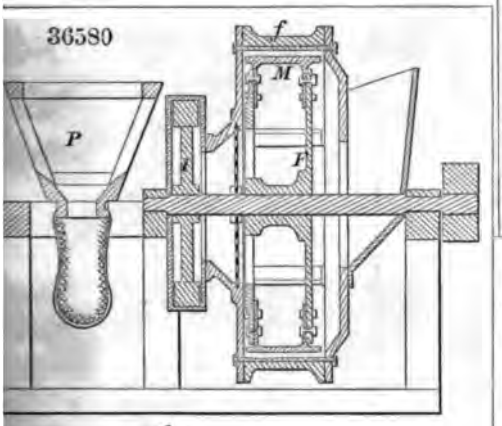

36582

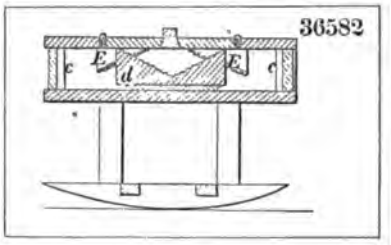

36581

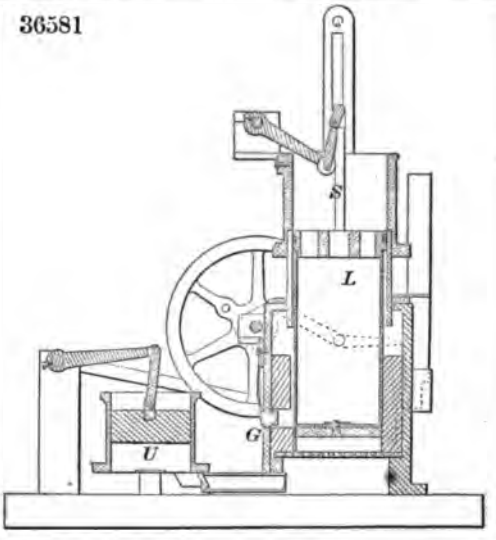

36583

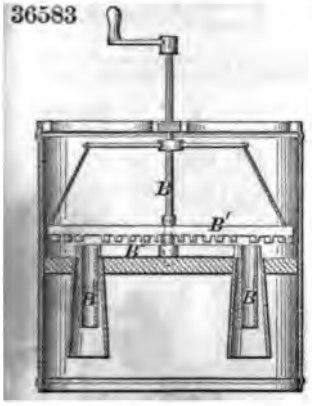

36584

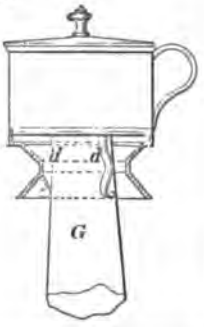

36585

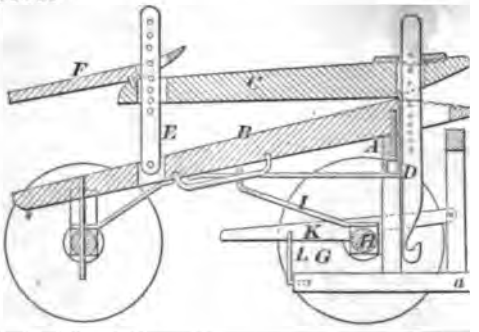

36586

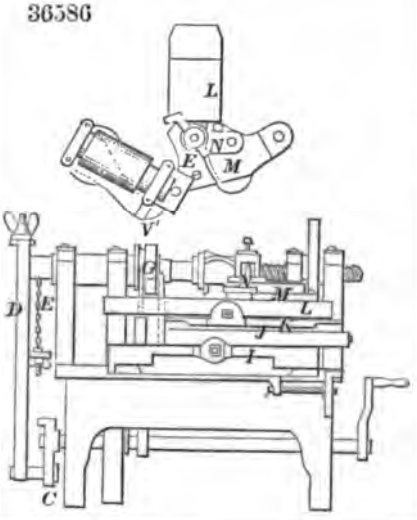

36587

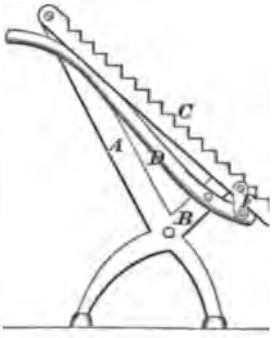

36589

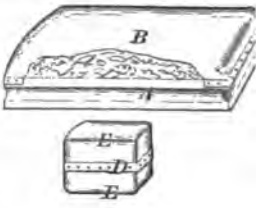

36588

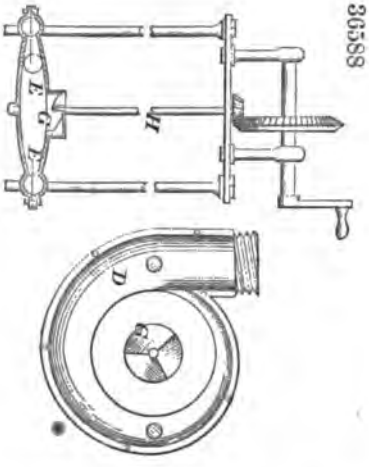

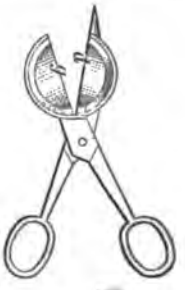

36591

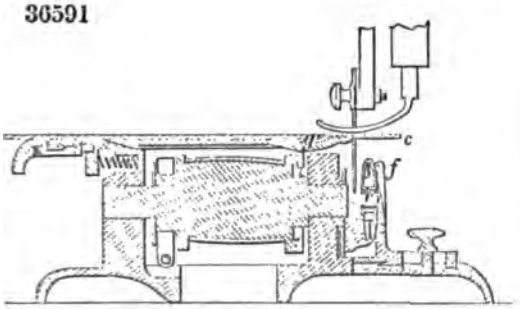

36593

36592

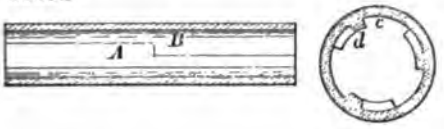

36594

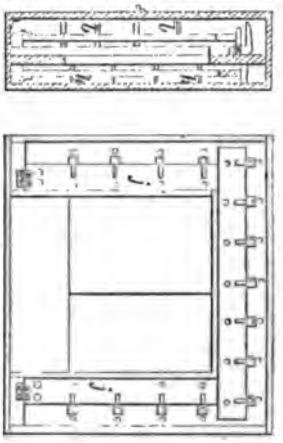

36596

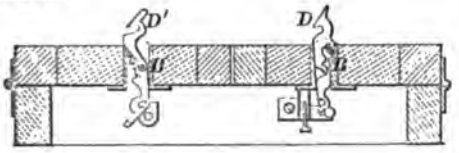

36597

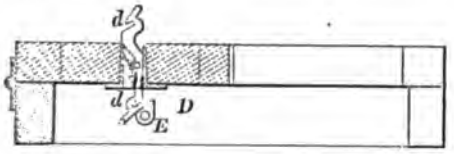

36595

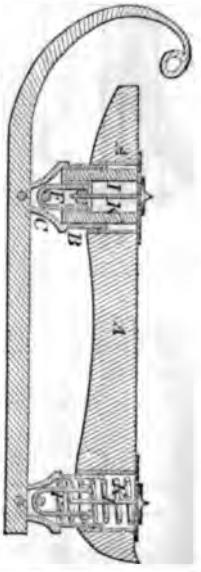

36598

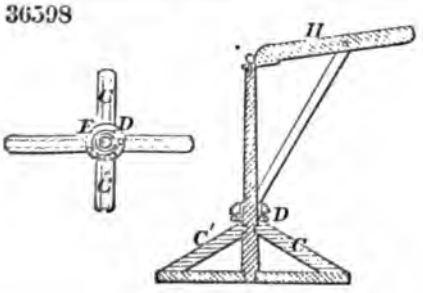

36599

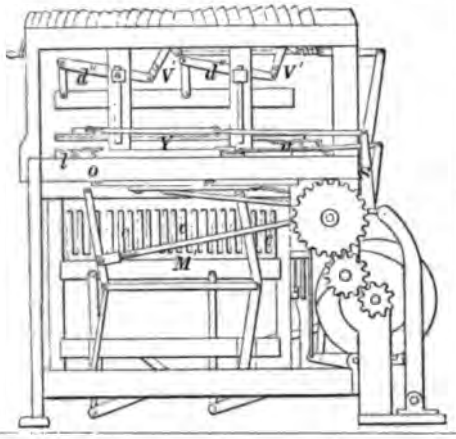

36601

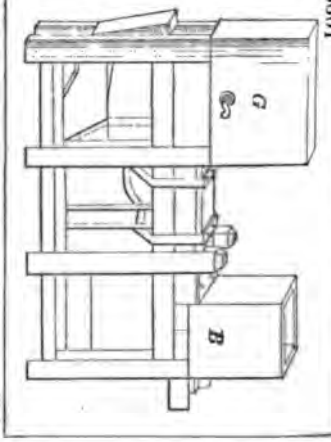

36602

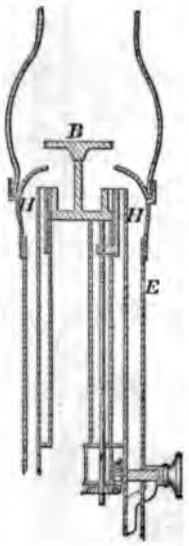

36600

36603

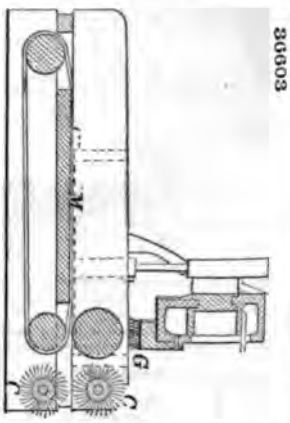

36604

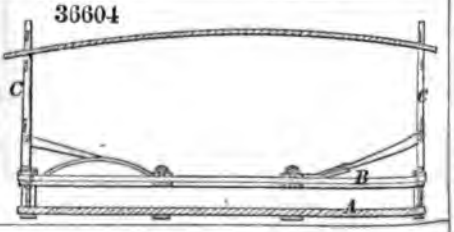

36605

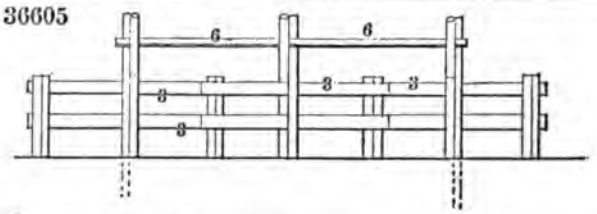

36606

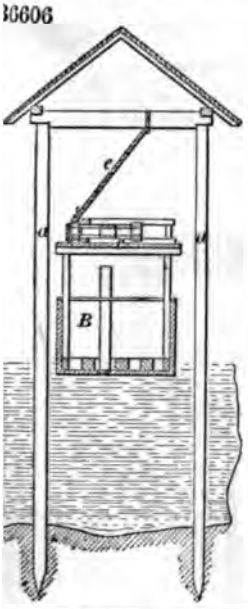

36607

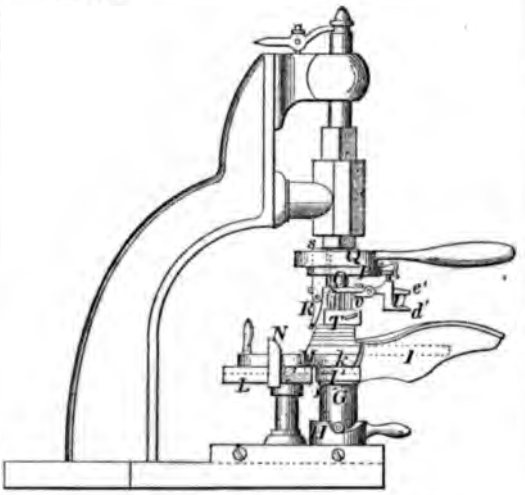

36610

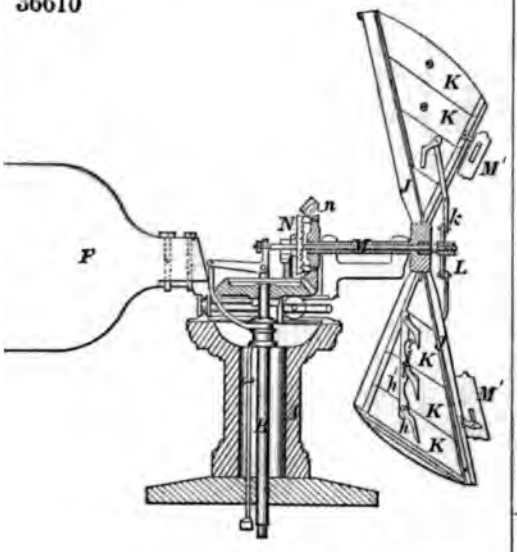

36609

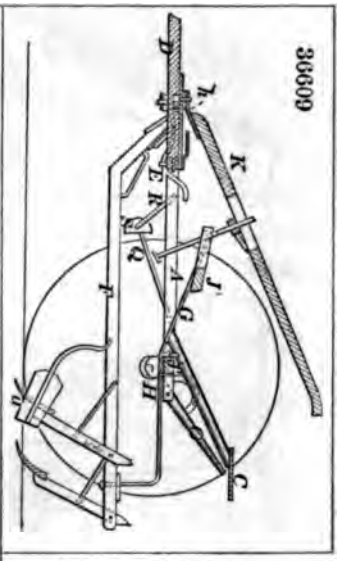

36611

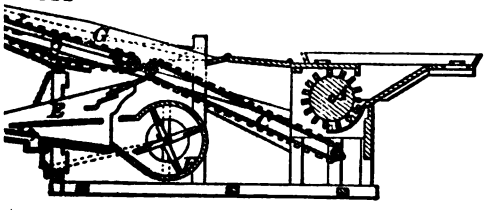

36612

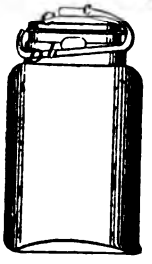

36613

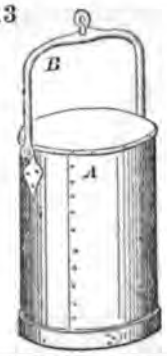

36614

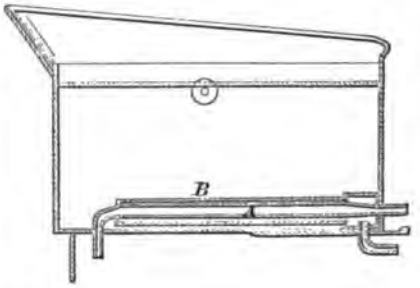

36615

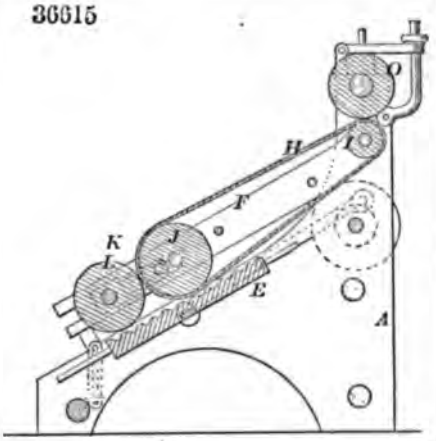

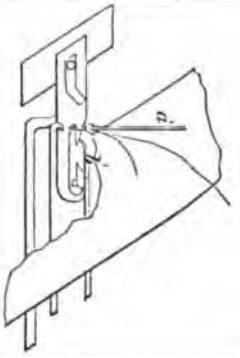

36618

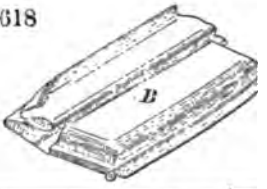

36617

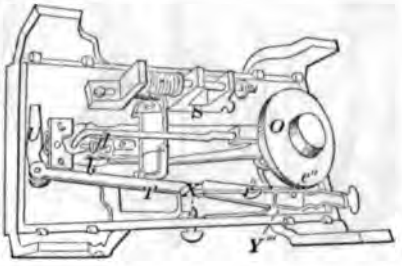

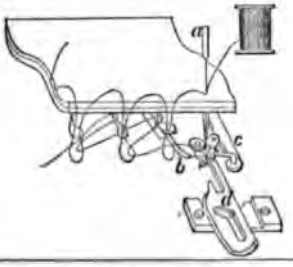

36619

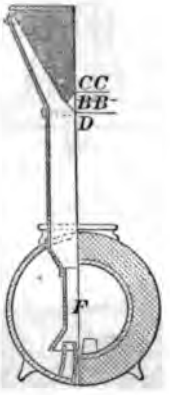

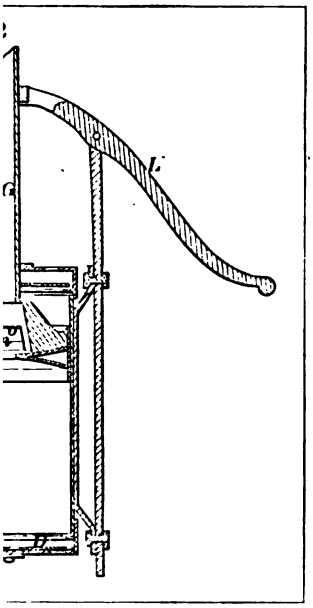

36623

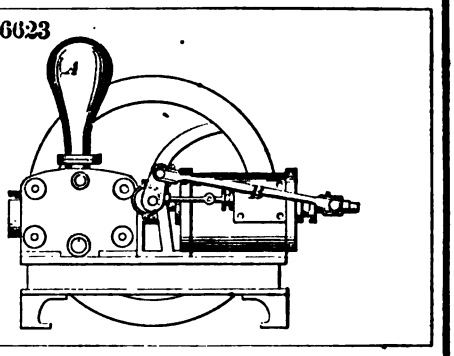

36624

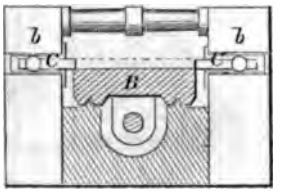

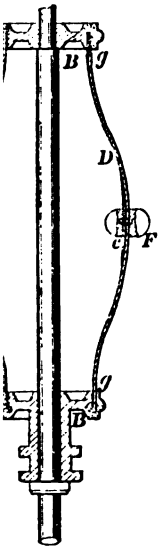

36625

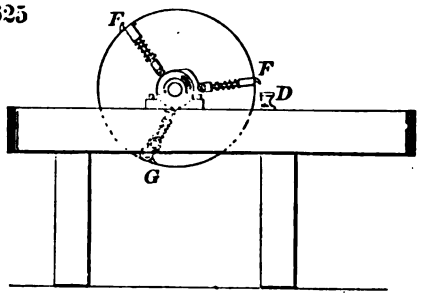

36627

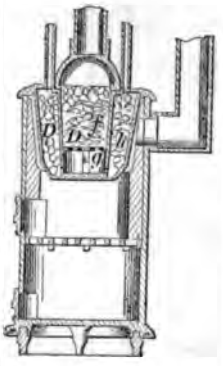

36626

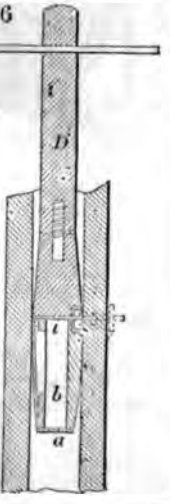

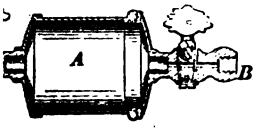

36629

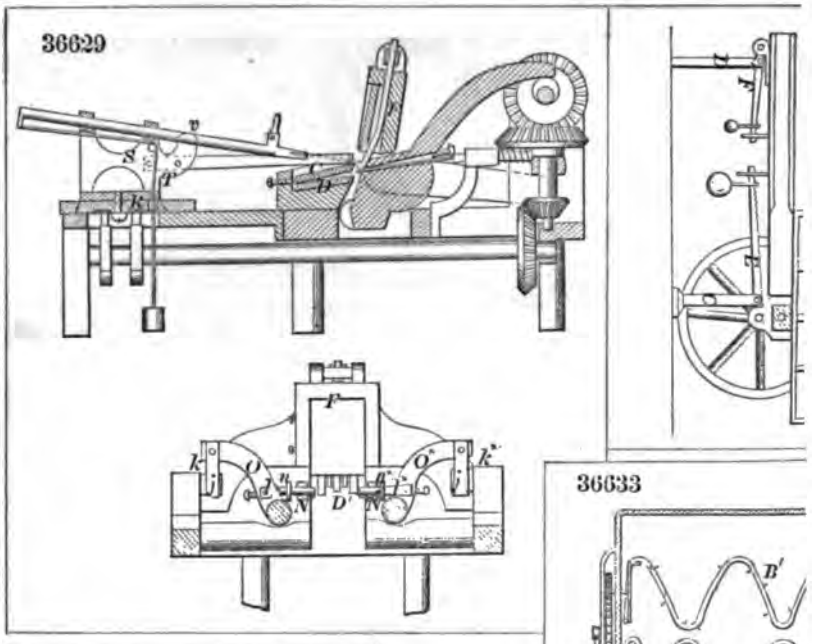

36633

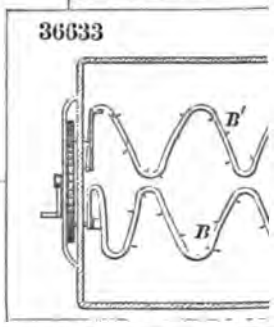

36632

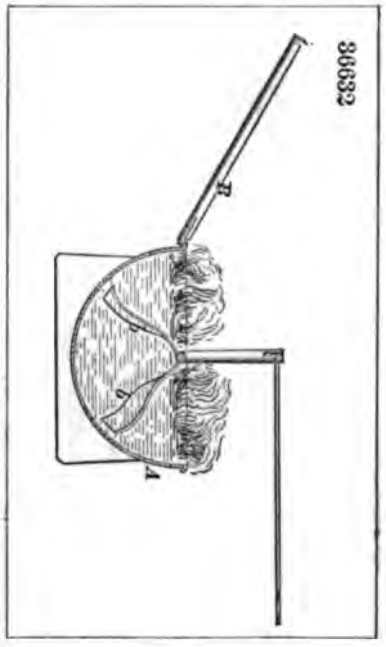

36630

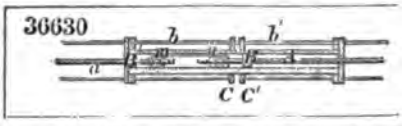

36634

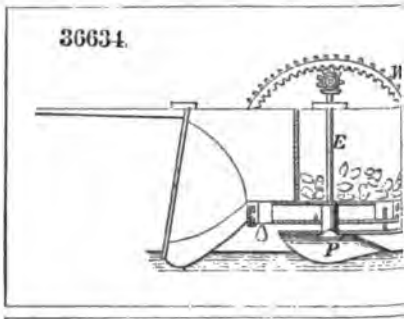

36635

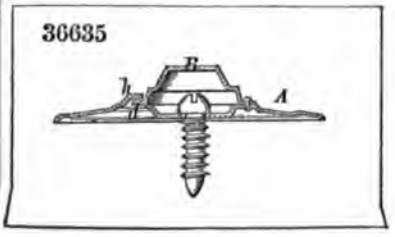

36637

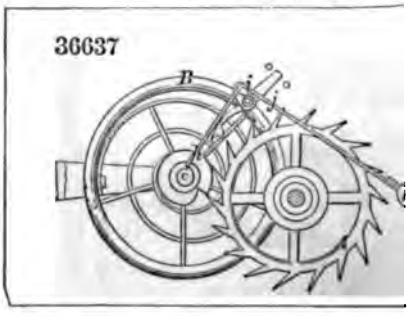

36638

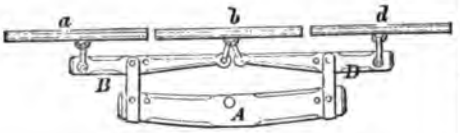

36639

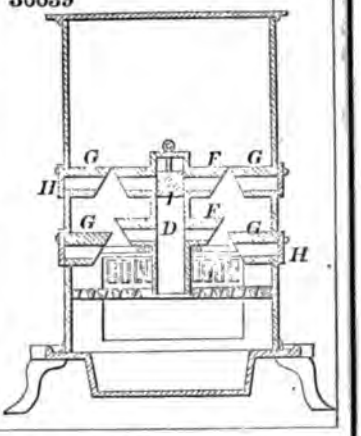

36640

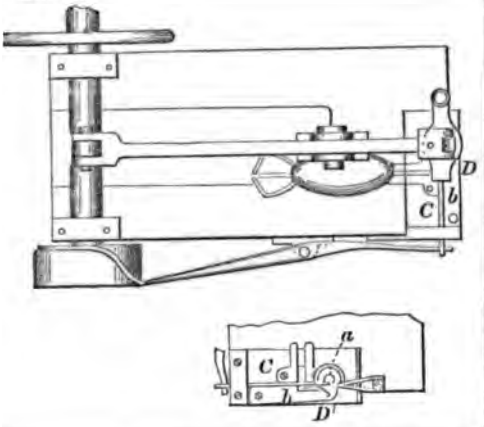

36641

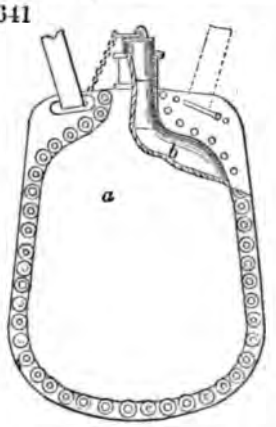

36642

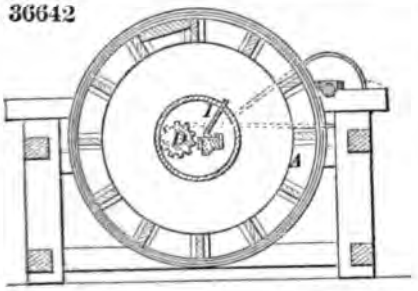

36643

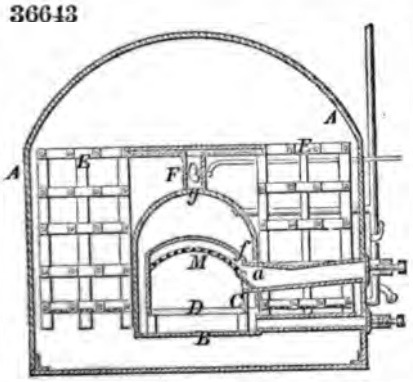

36644

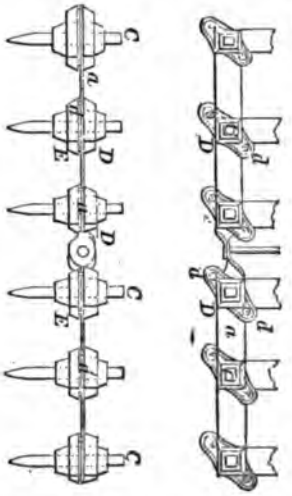

36645

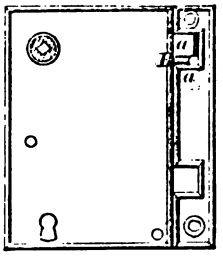

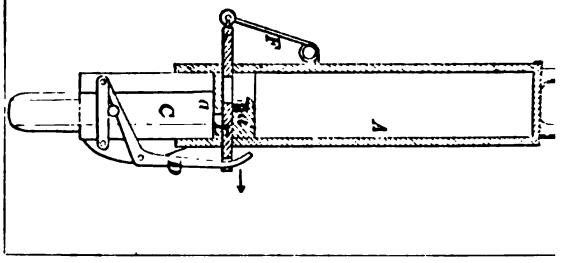

36647

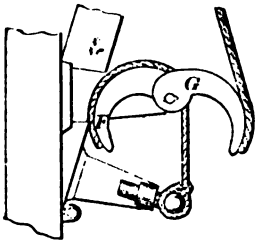

36648

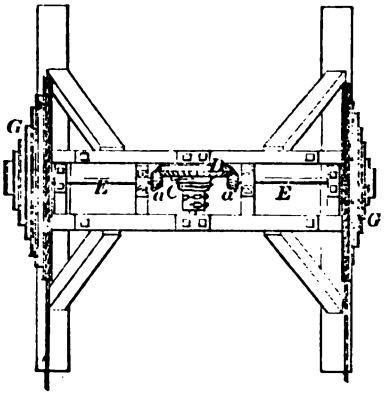

36649

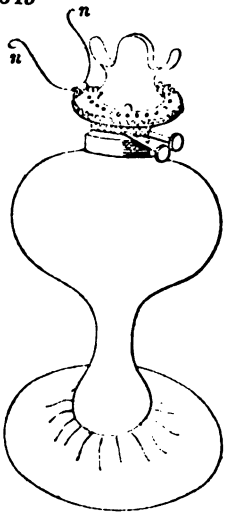

36650

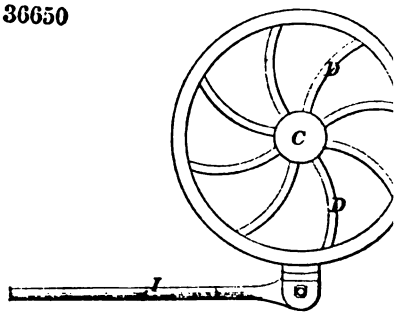

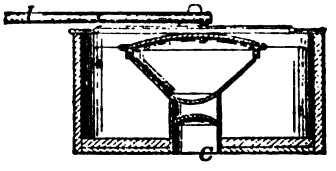

36651

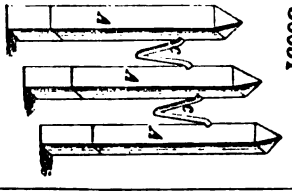

52

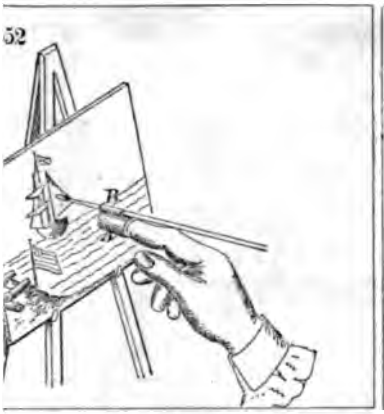

36653

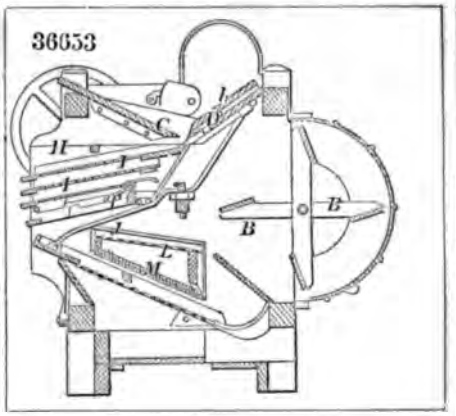

3654

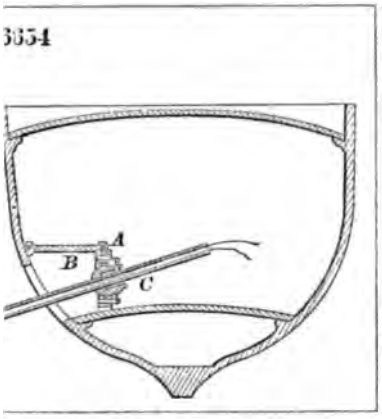

36655

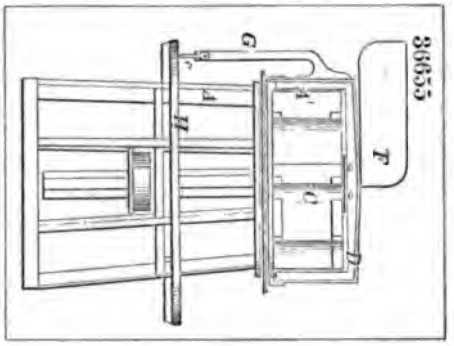

36656

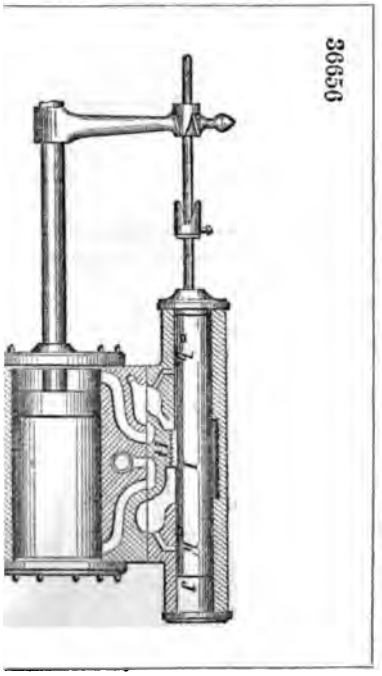

36657

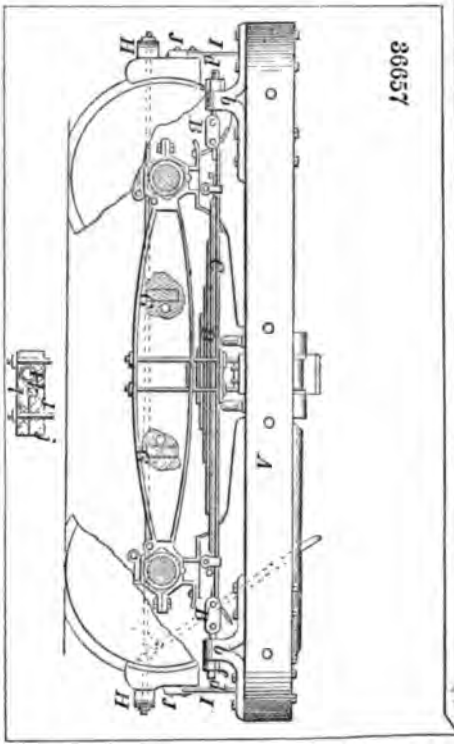

36658

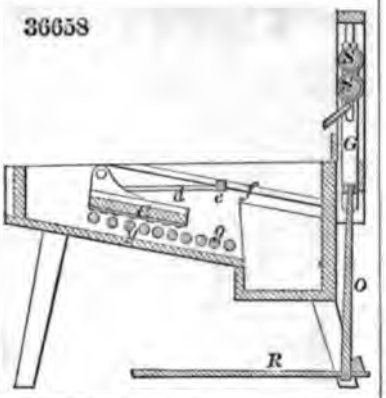

36659

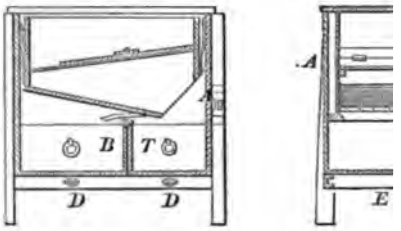

36661

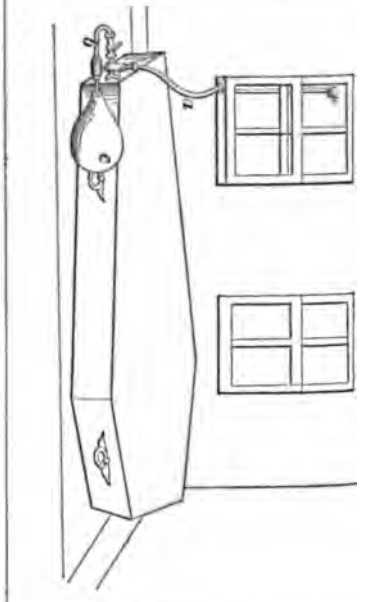

36662

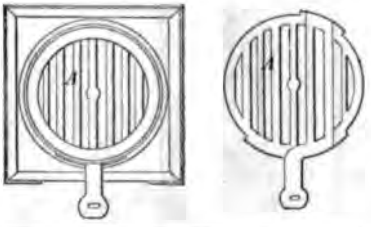

36663

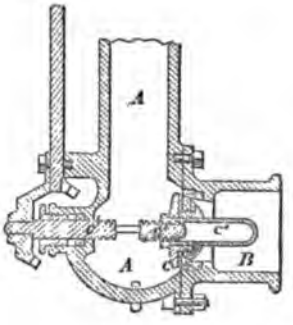

36664

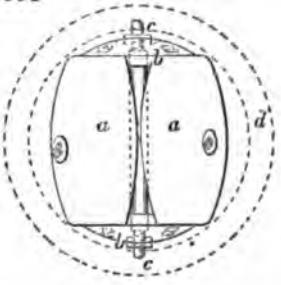

36665

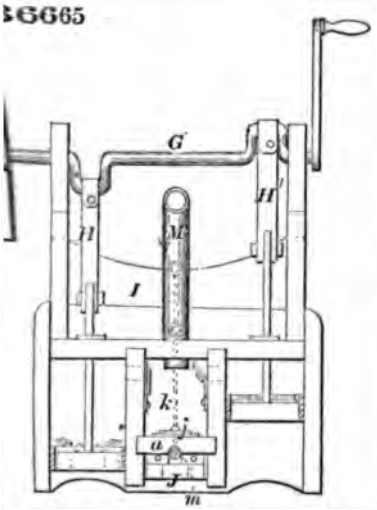

36666

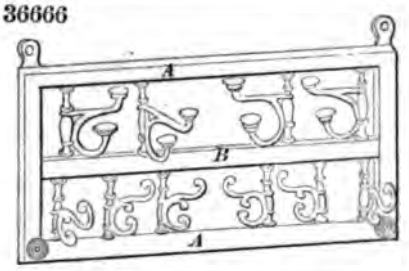

36667

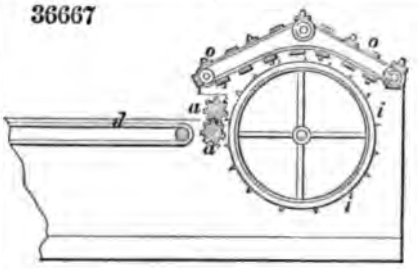

36668

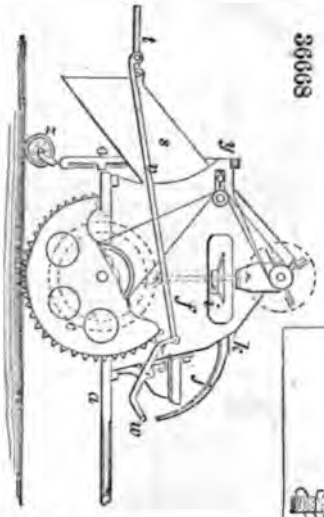

36669

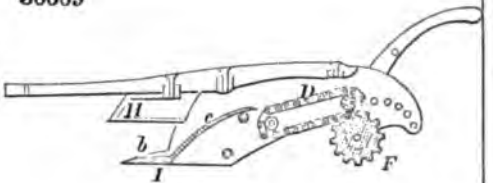

36672

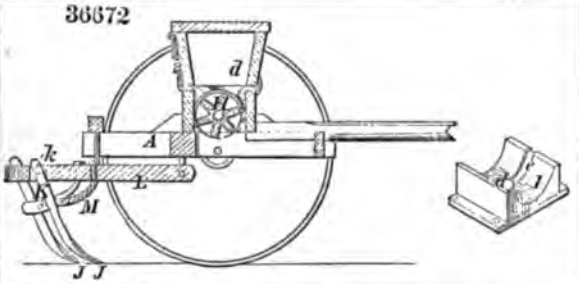

36671

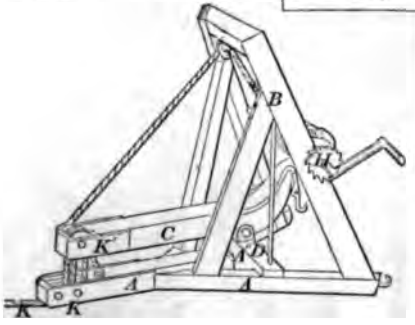

36670

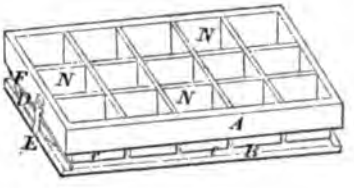

36673

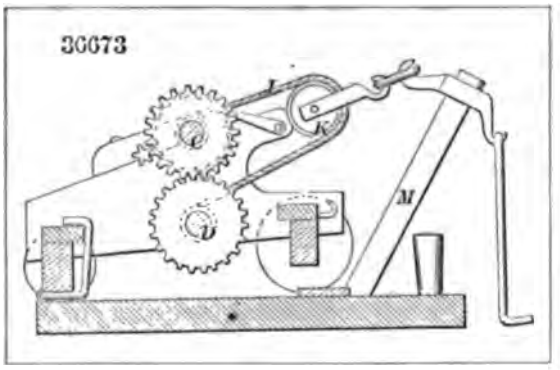

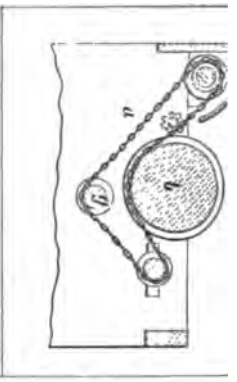

36675

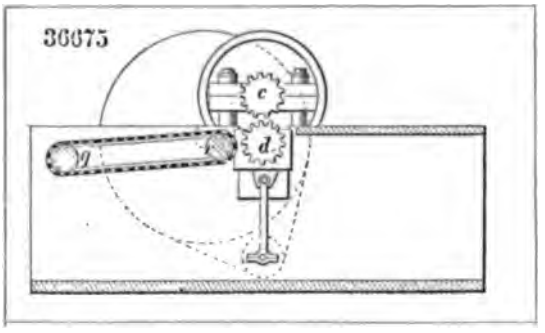

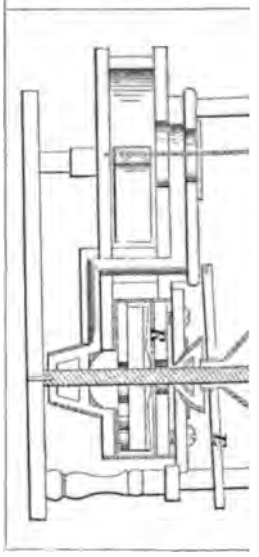

36678

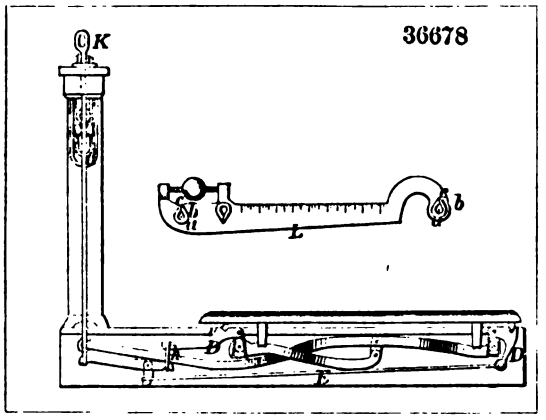

36677

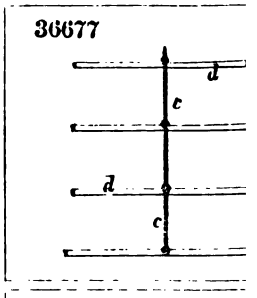

36679

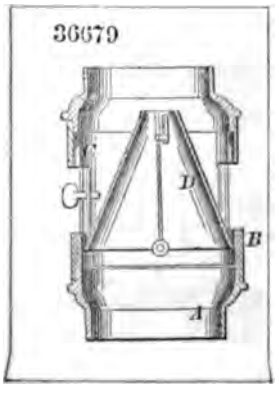

36681

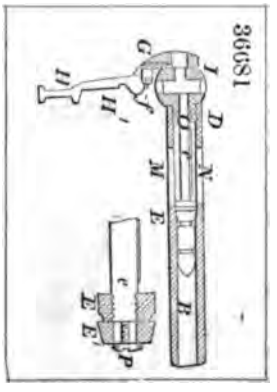

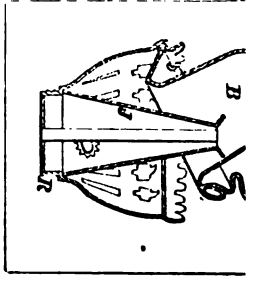

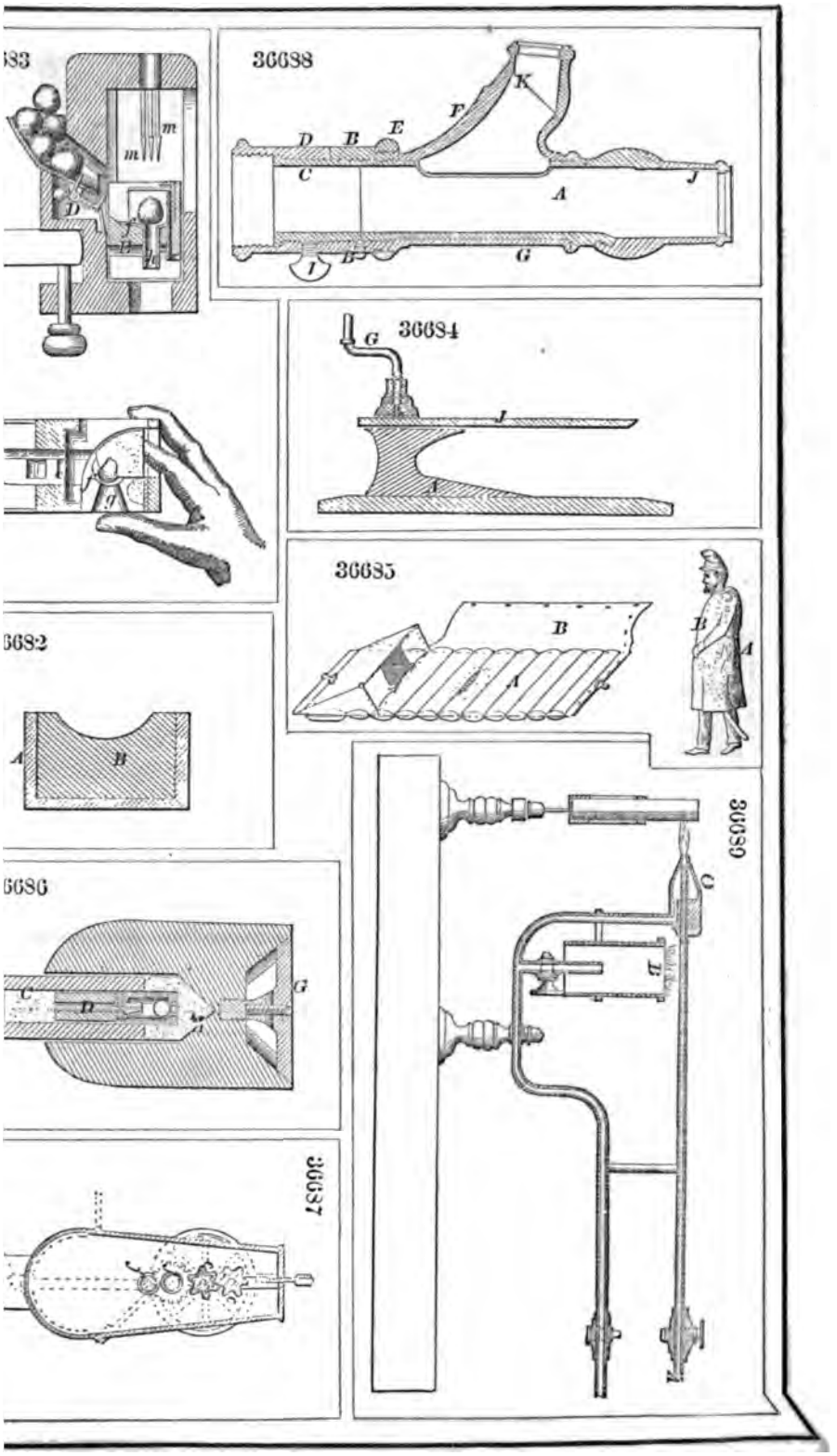
36688
36684
36685
36686
36687
36689

36690

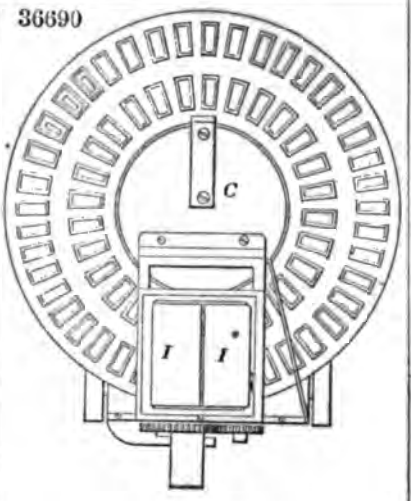

36691

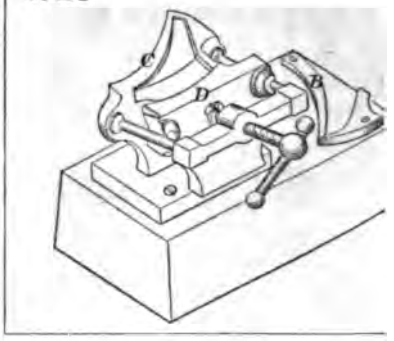

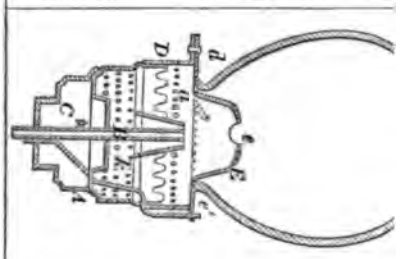

36695

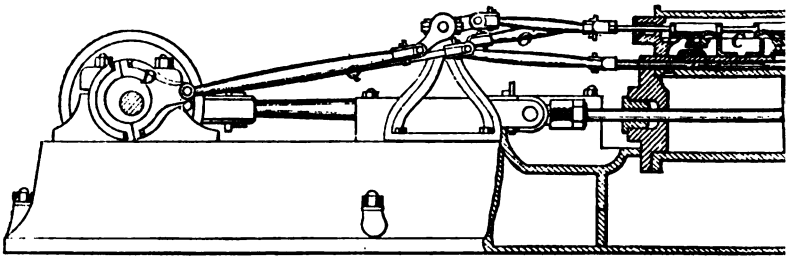

36694

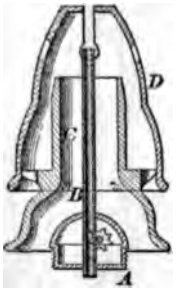

36696

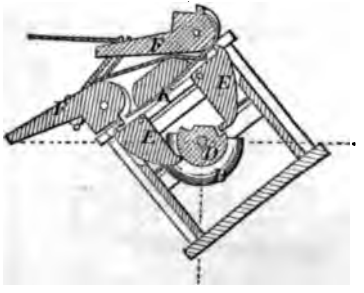

36697

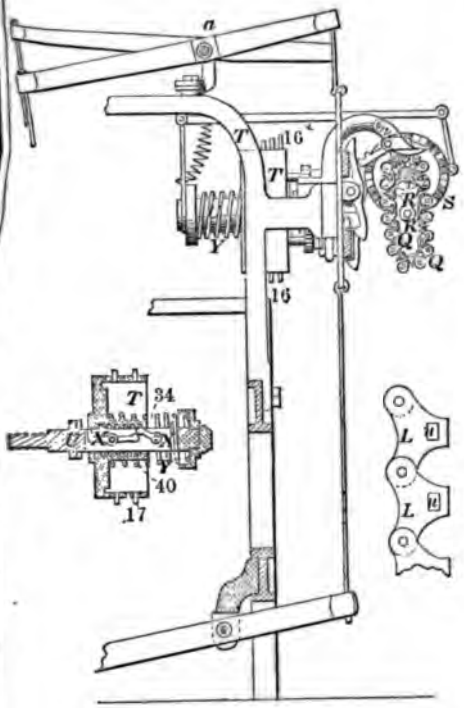

36698

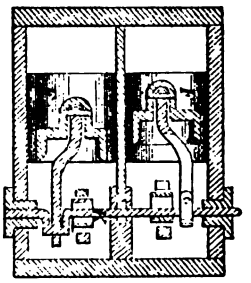

36700

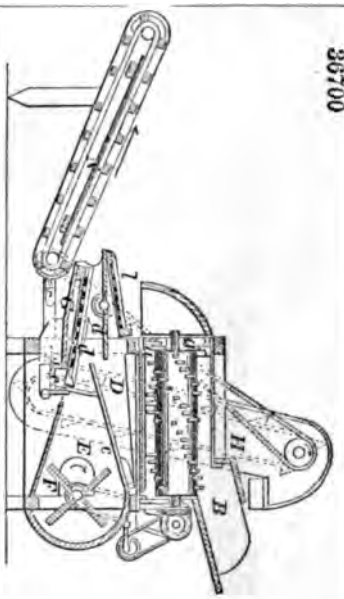

36699

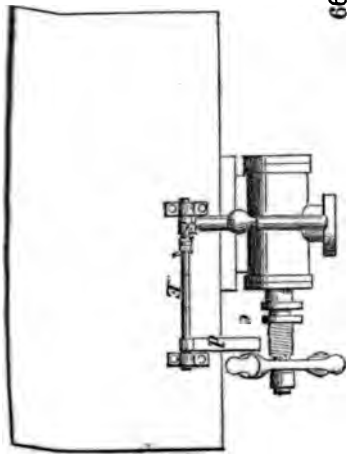

36701

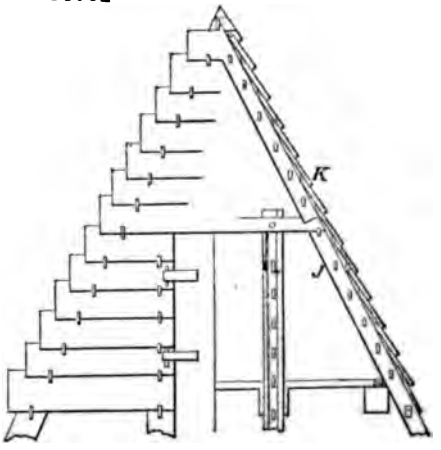

36702

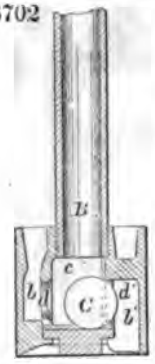

36705

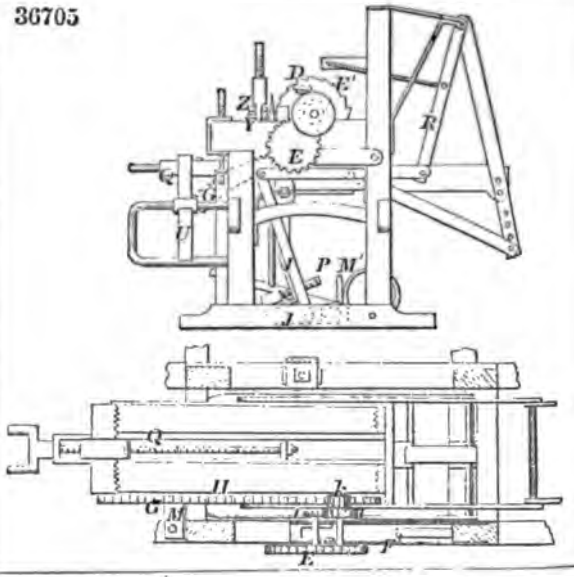

36708

36706

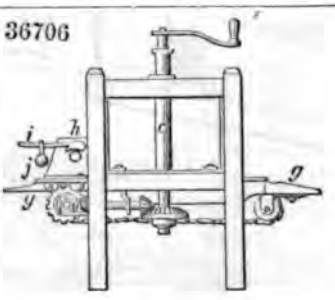

36707

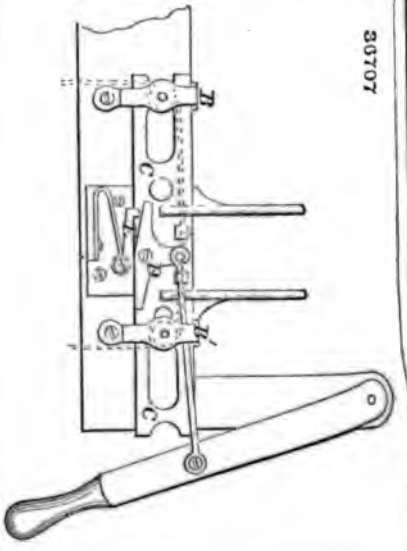

36703

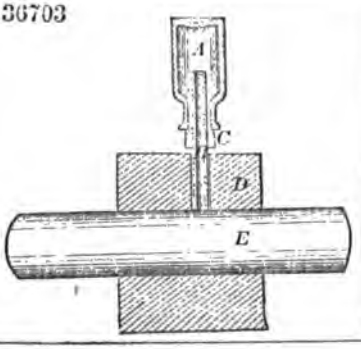

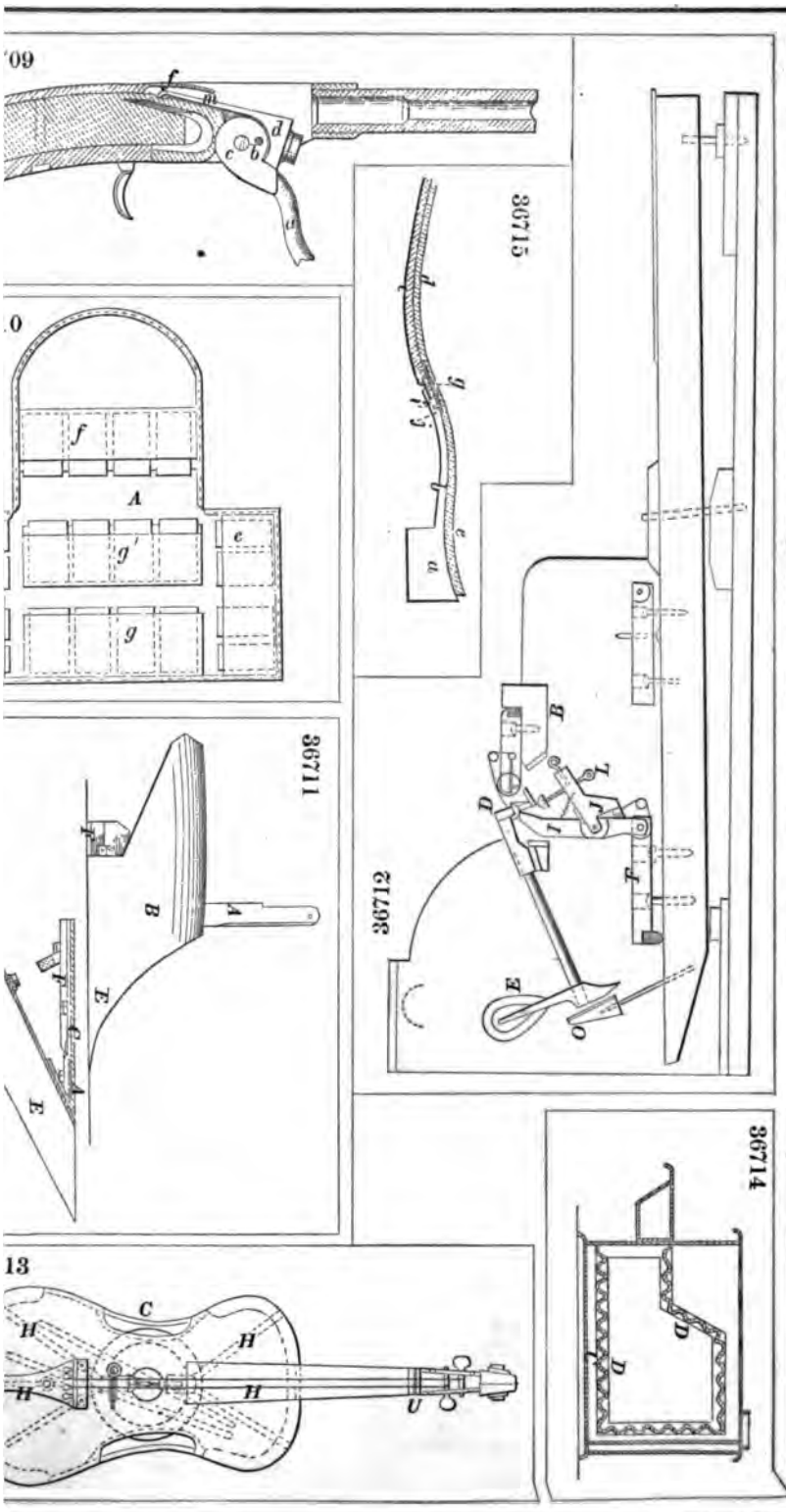
36714
36712
36715
36711
A
B
C
D
E
F
G
H
L
O
U

36716

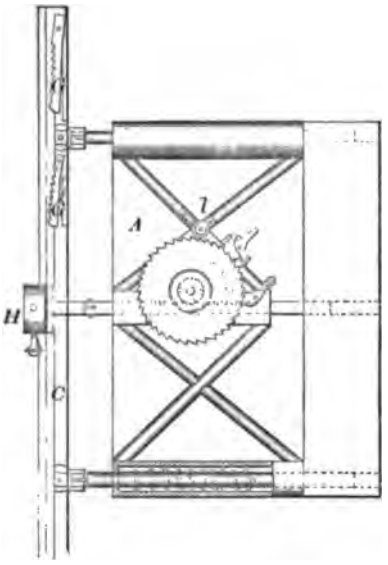

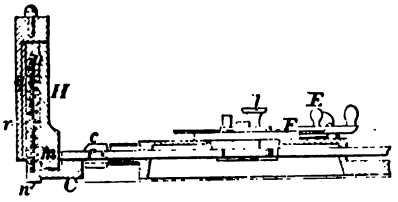

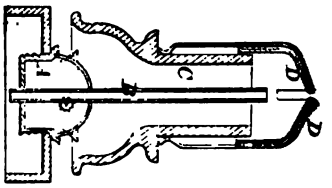

36718

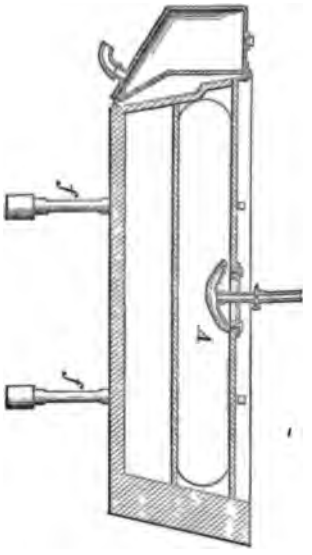

36720

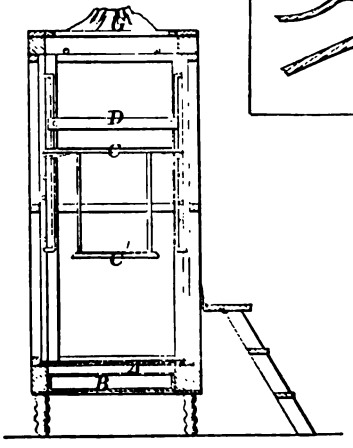

36721

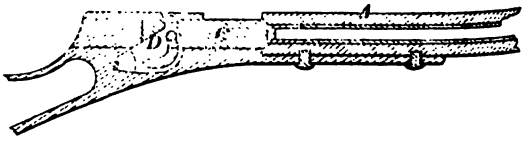

36719

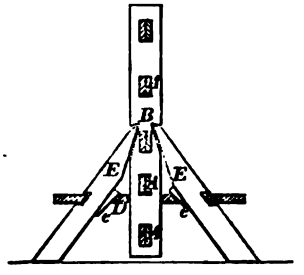

36722

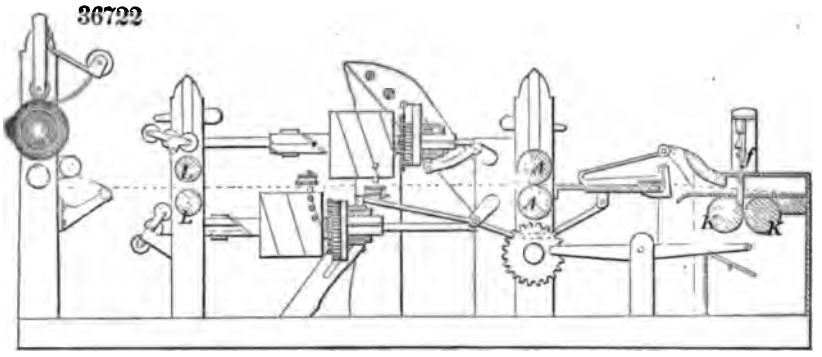

36725

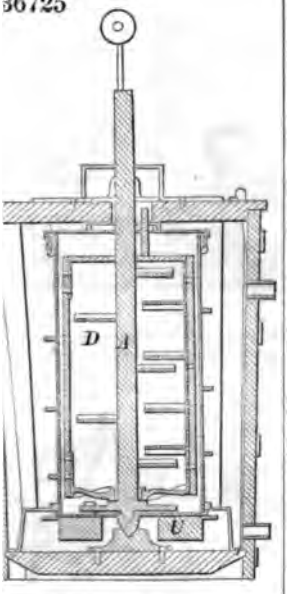

36724

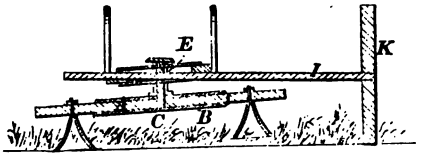

36723

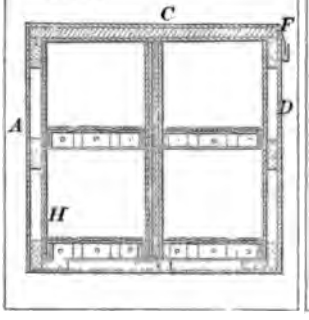

36726

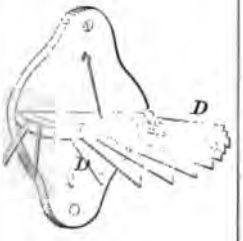

36727

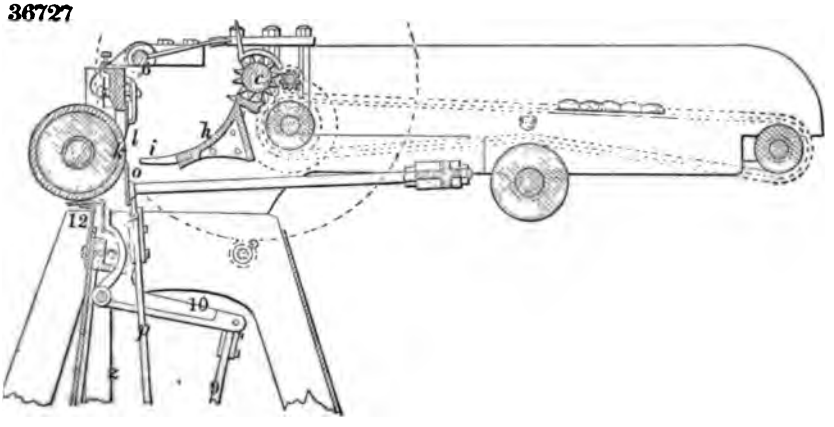

36728

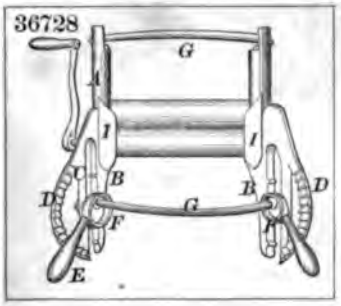

36729

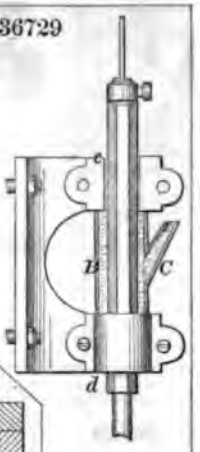

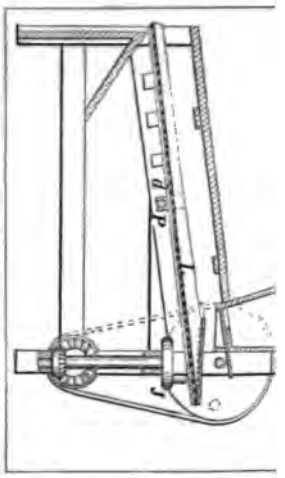

36730

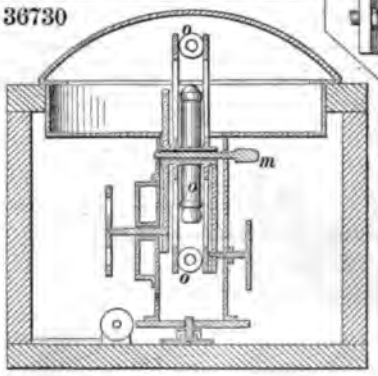

36732

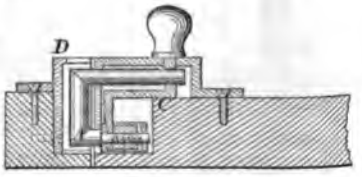

36736

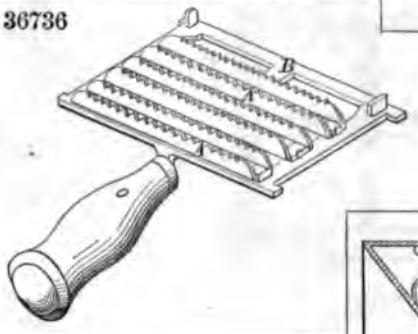

36734

36737

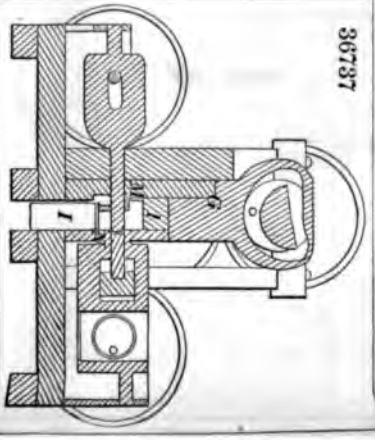

36738

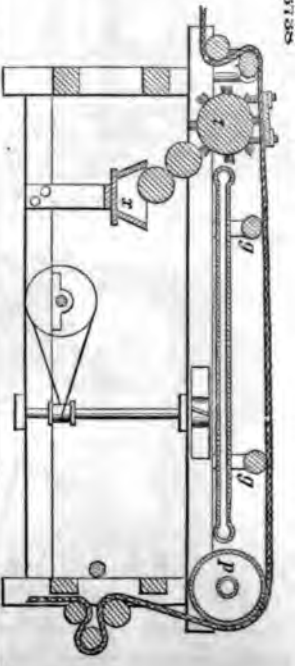

36739

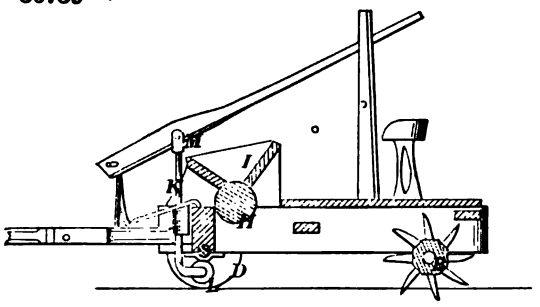

36740

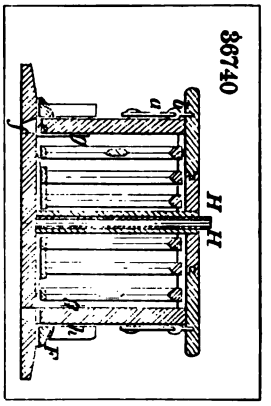

36741

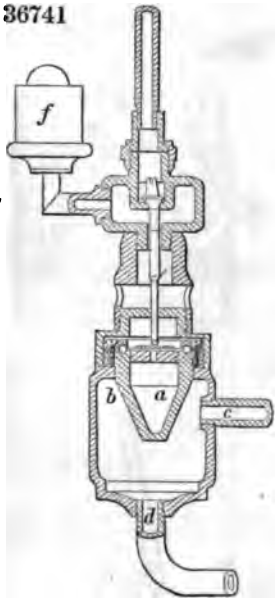

36742

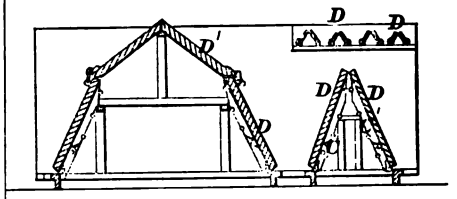

36743

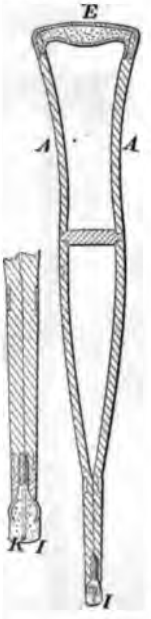

36744

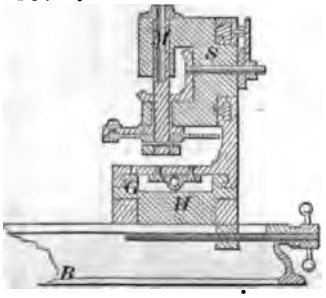

36745

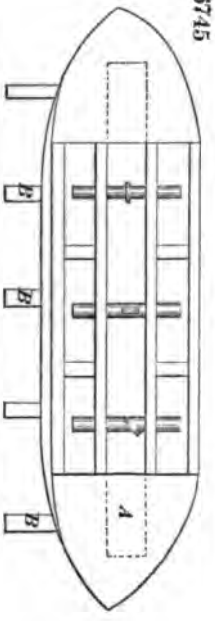

36746

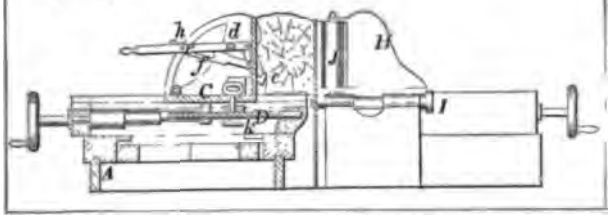

36747

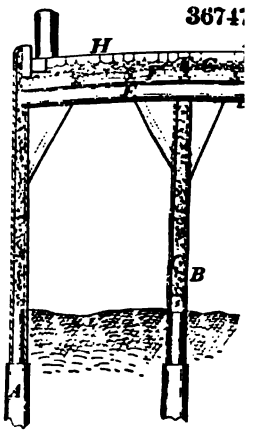

36749

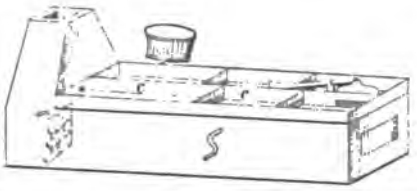

36751

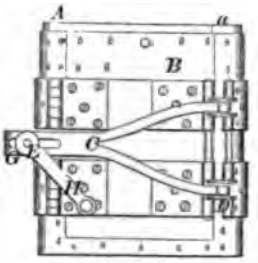

36748

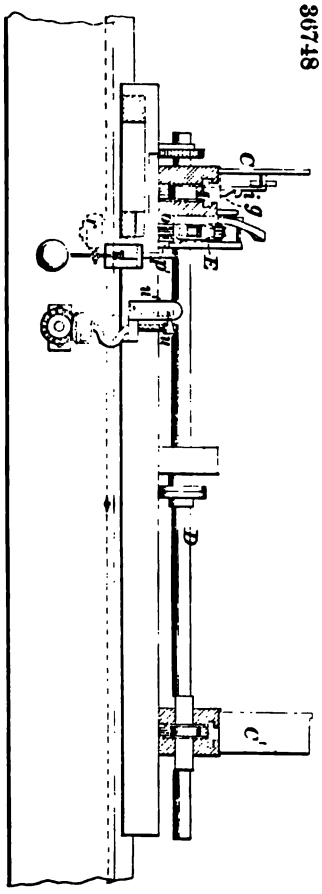

36752

36754

36753

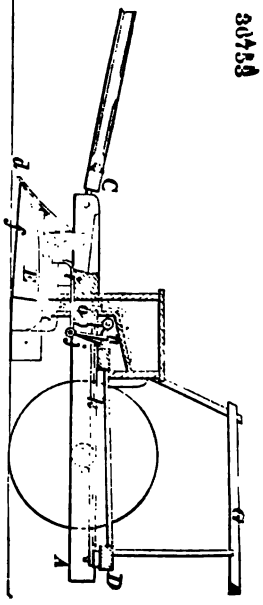

56

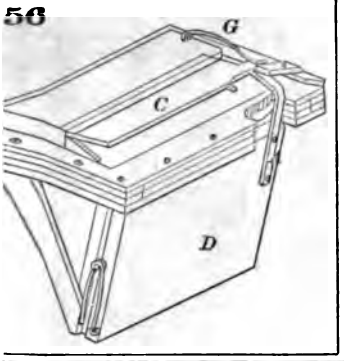

36755

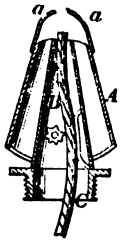

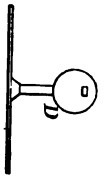

758

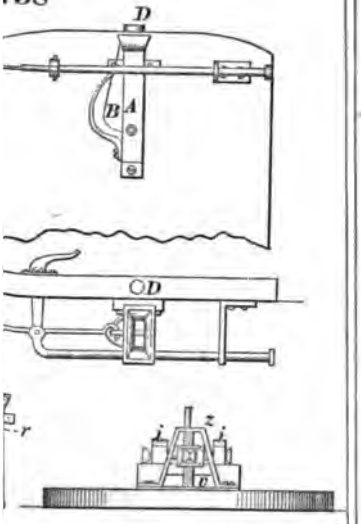

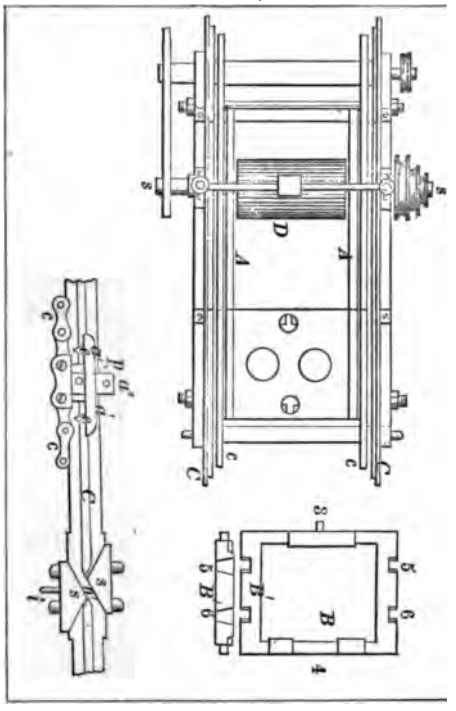

36761

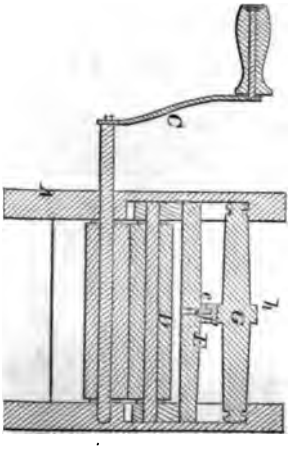

36760

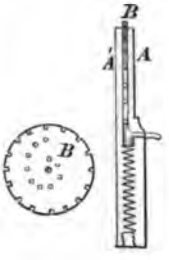

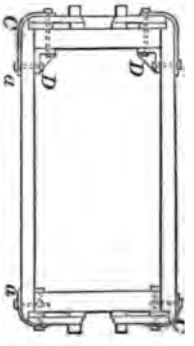

36763

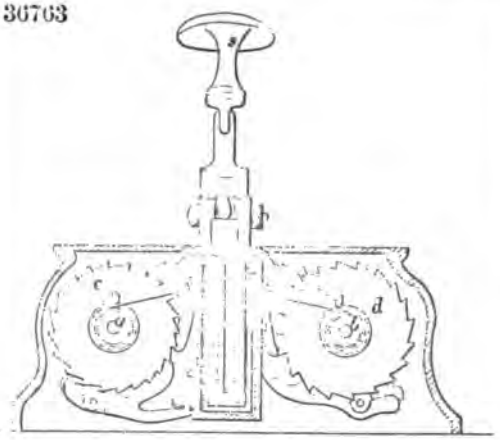

36764

36765

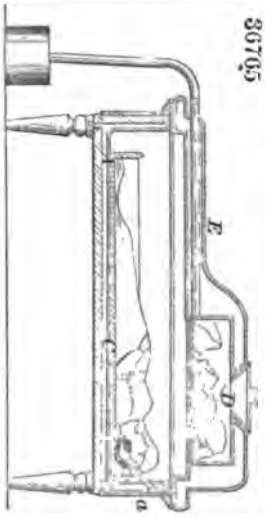

36766

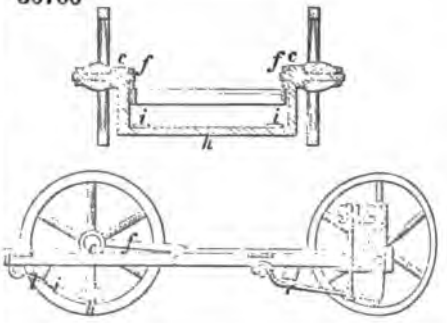

36768

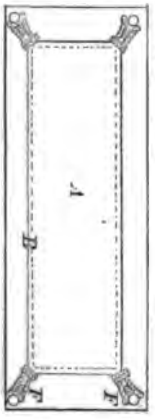

36767

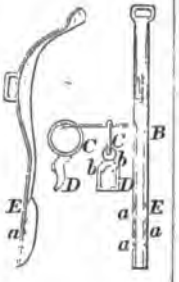

36769

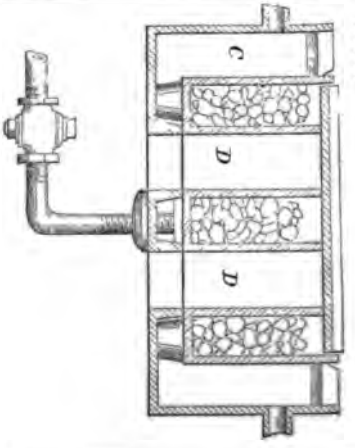

36770

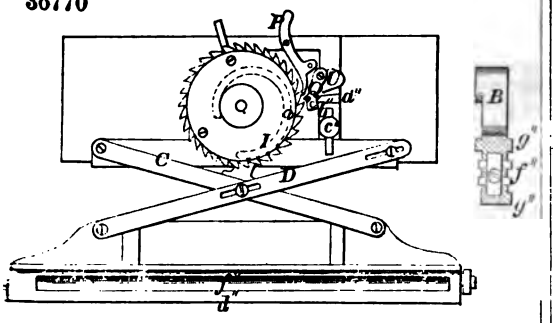

36771

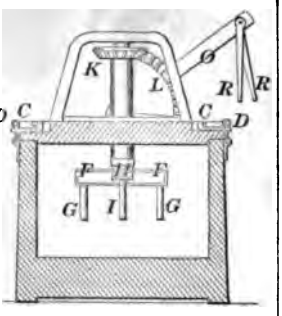

G773

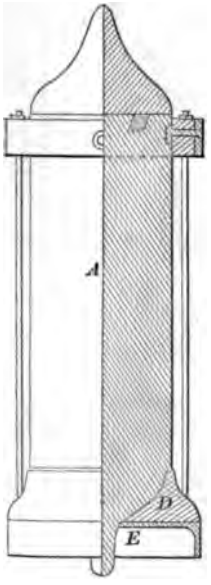

36776

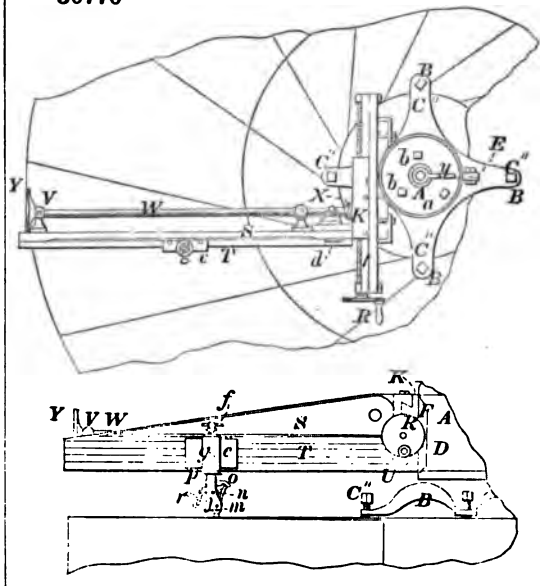

36772

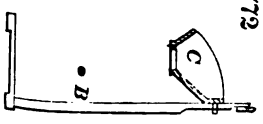

36775

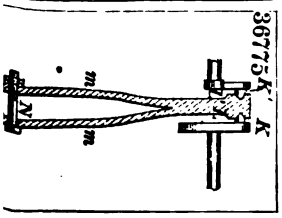

36774

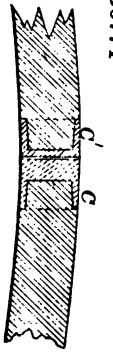

36777

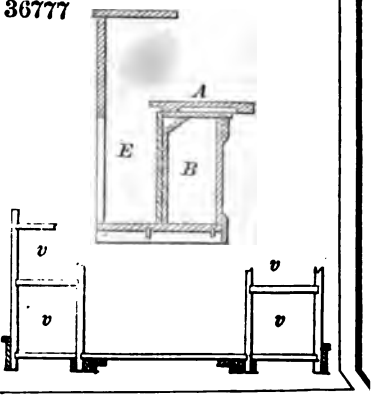

36778

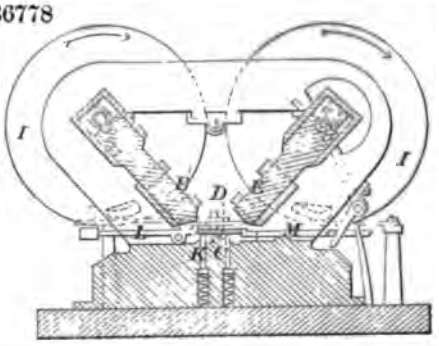

36779

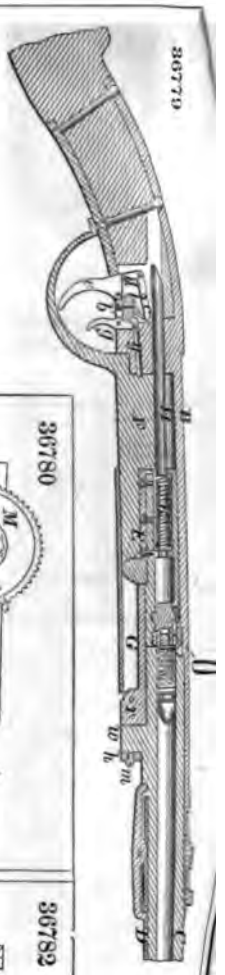

36781

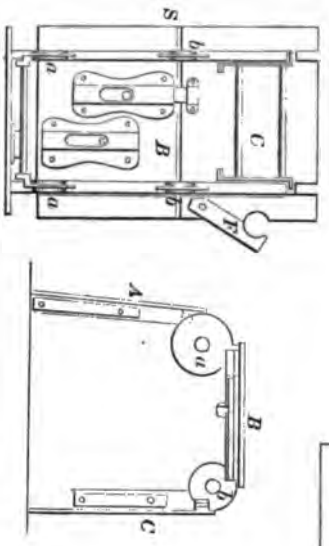

36780

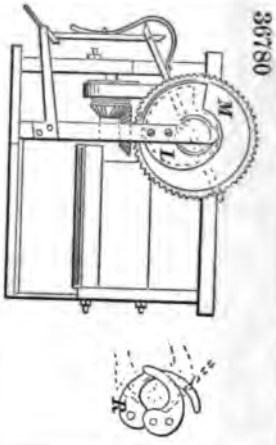

36782

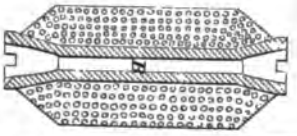

36783

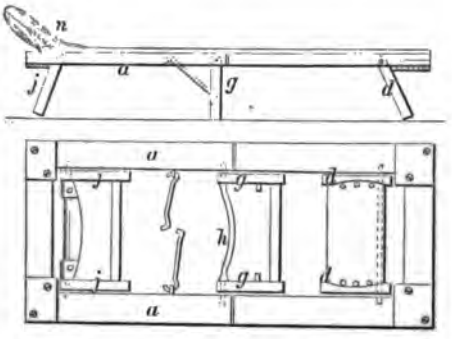

36784

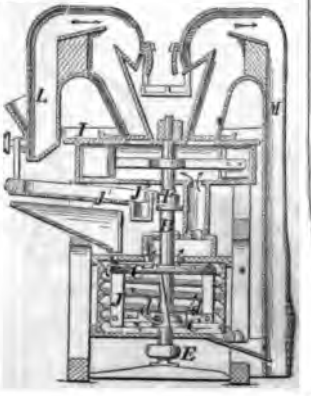

36786

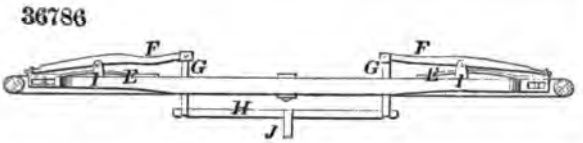

36787

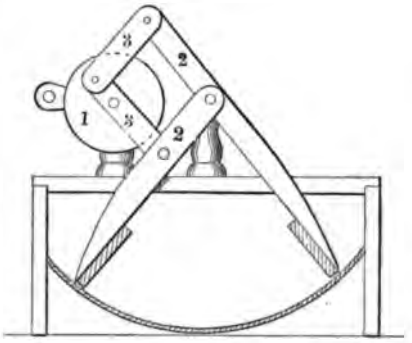

36785

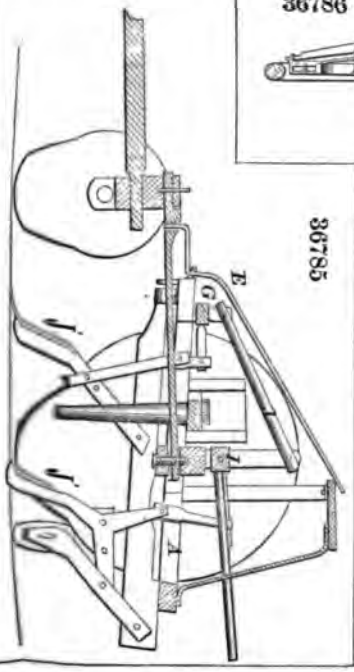

36788

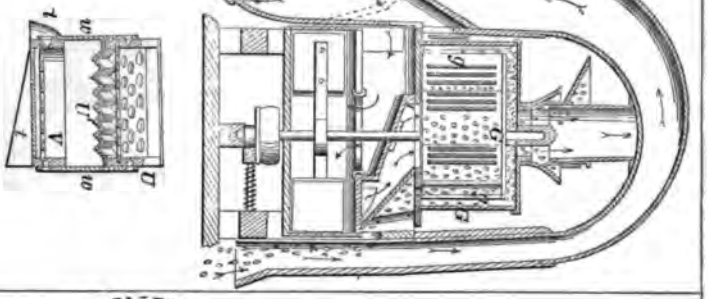

36789

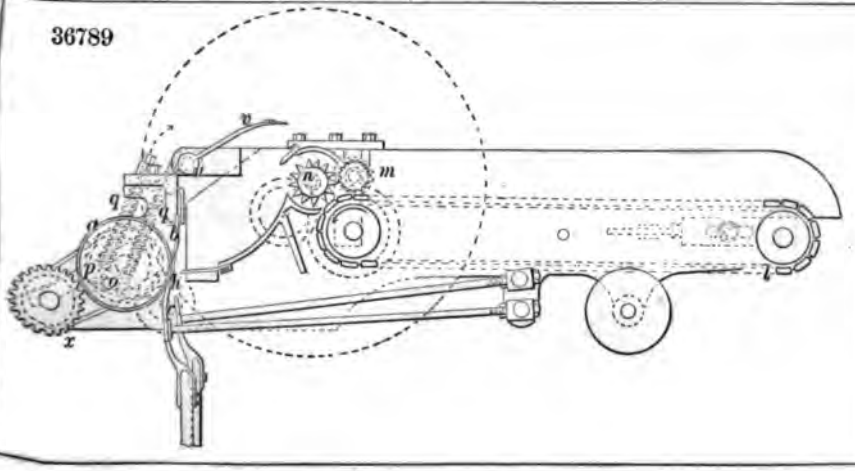

36716

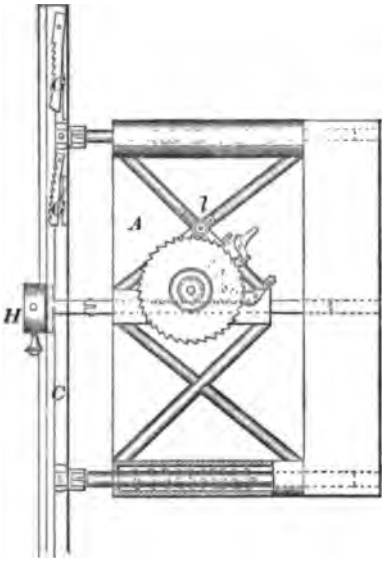

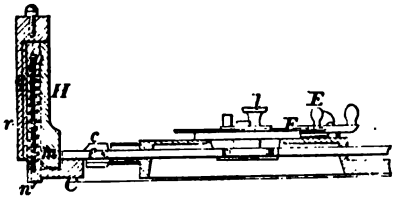

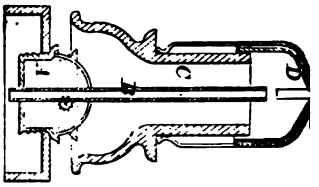

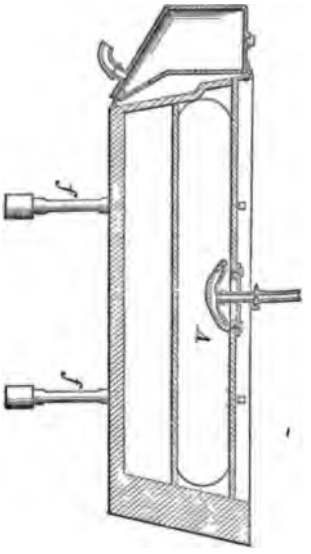

36720

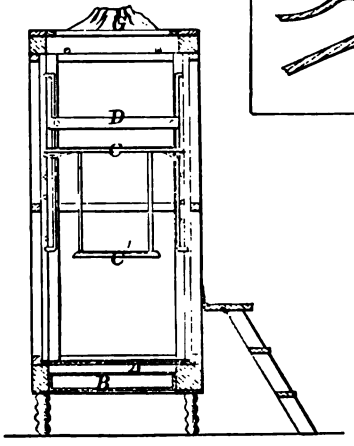

36721

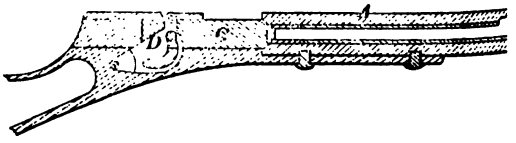

36719

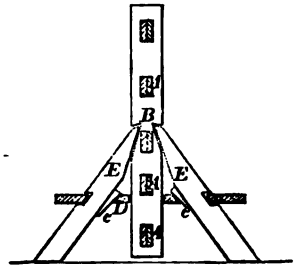

36722

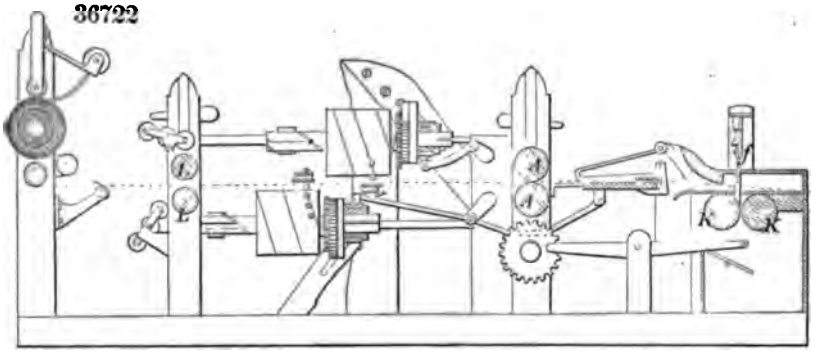

36725

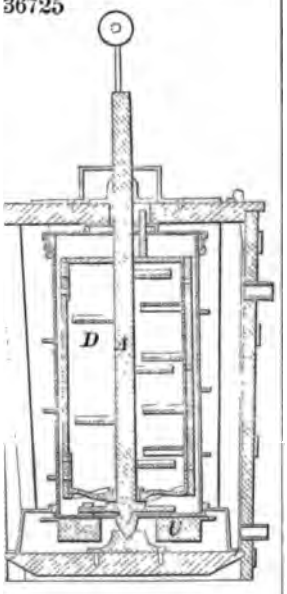

36724

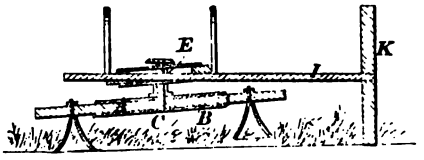

36723

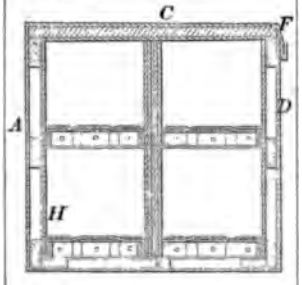

36726

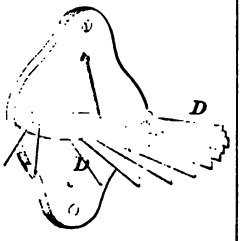

36727

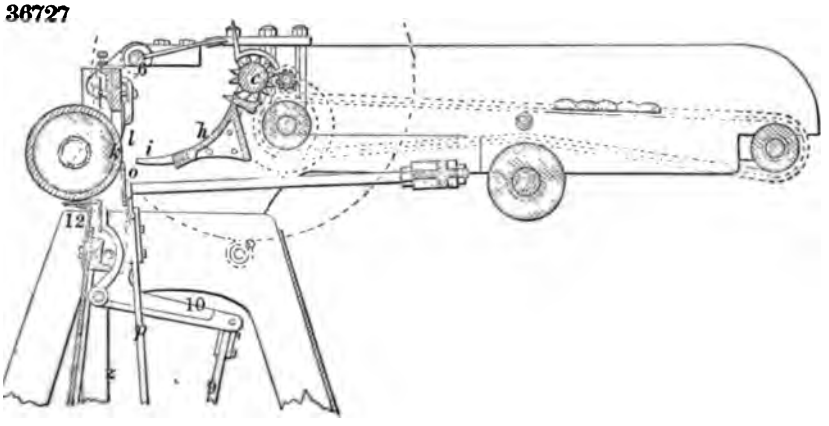

36728

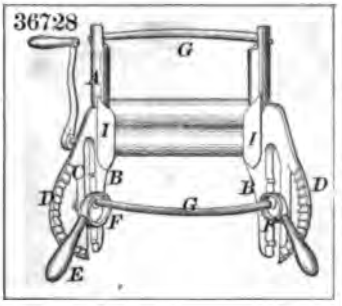

36729

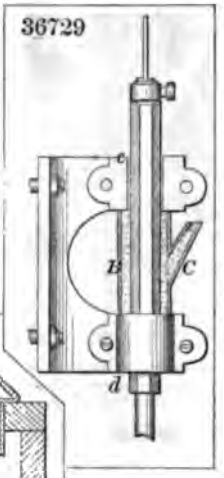

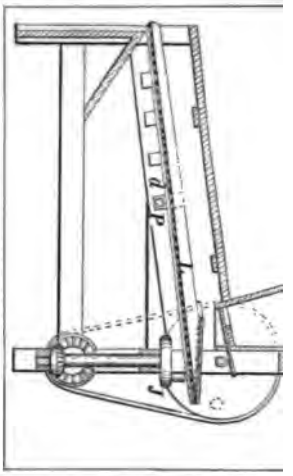

36730

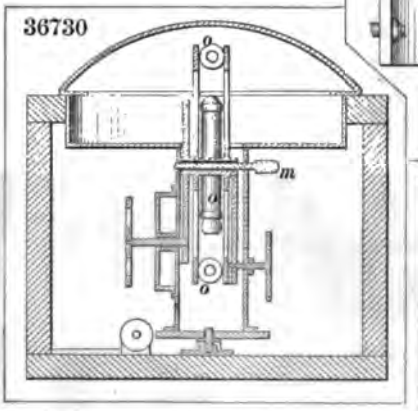

36732

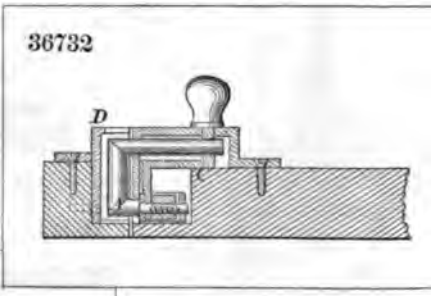

36736

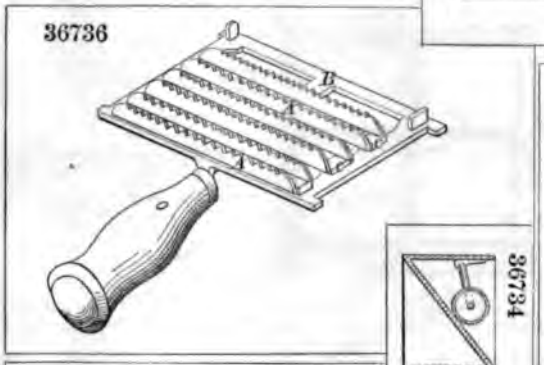

36734

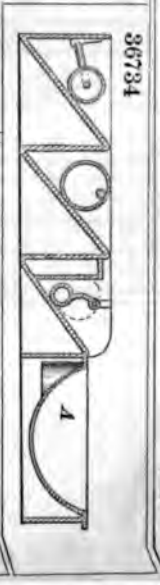

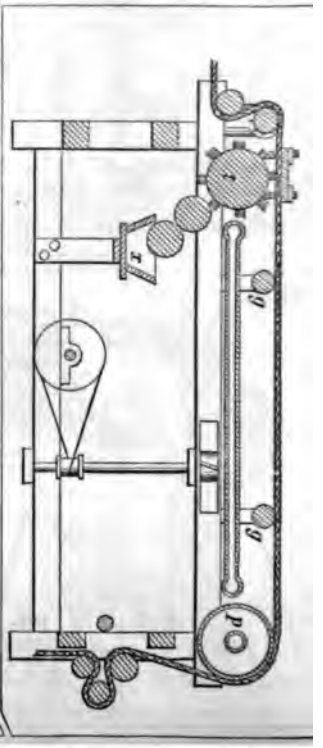

36737

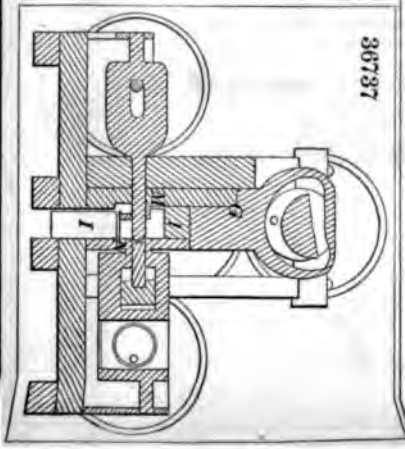

36739

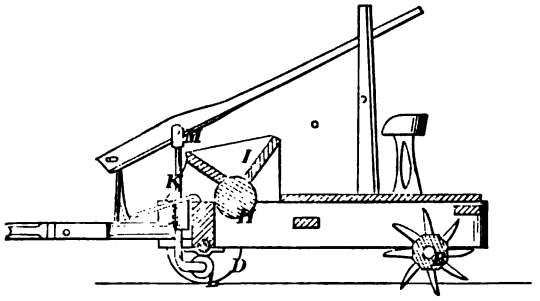

36740

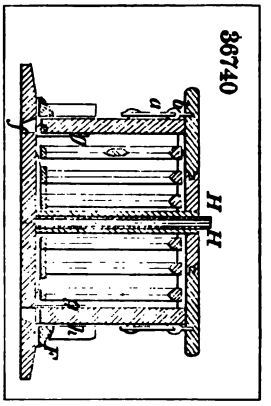

36741

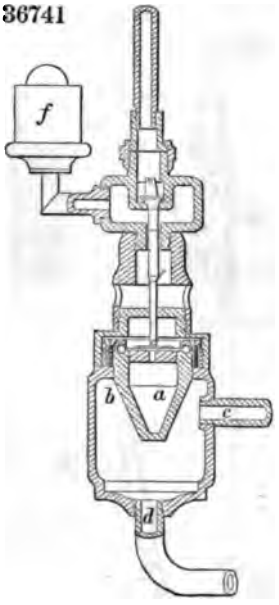

36742

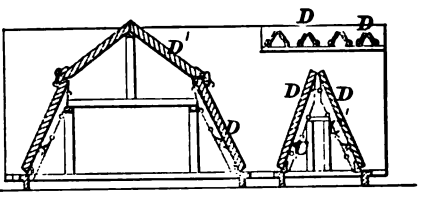

36743

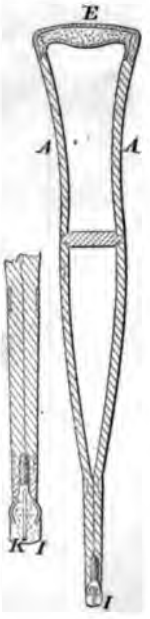

36744

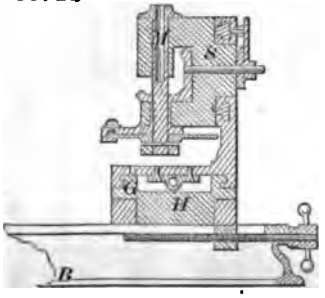

36745

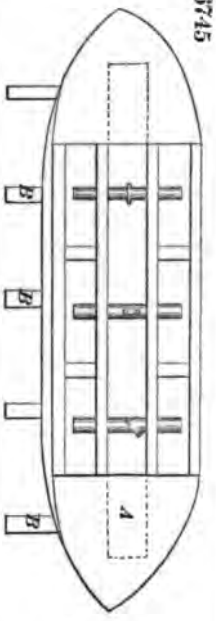

36746

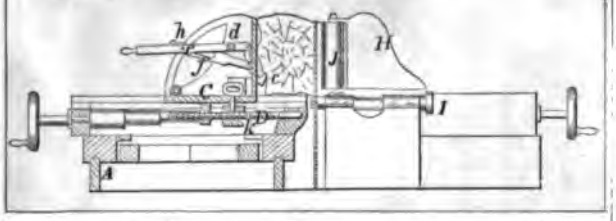

36747

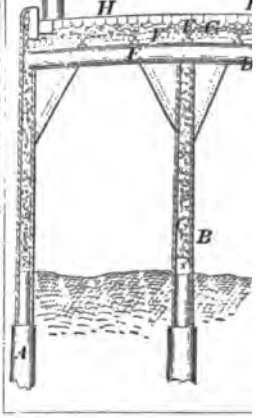

36749

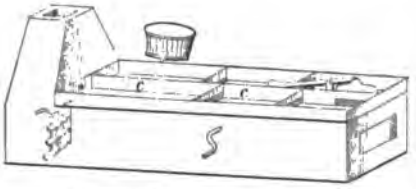

36751

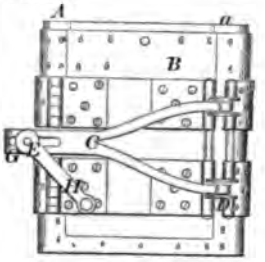

36748

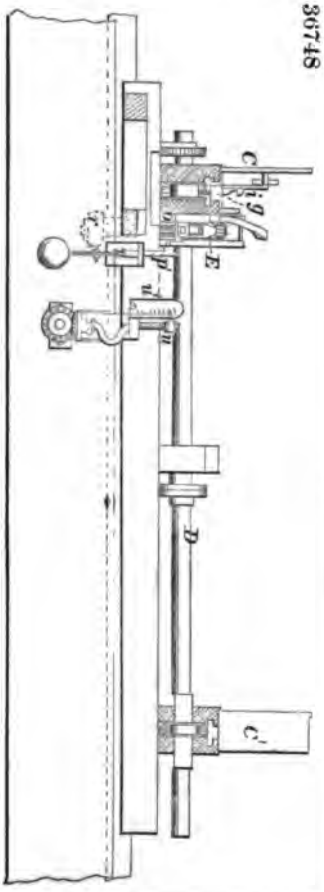

36752

36753

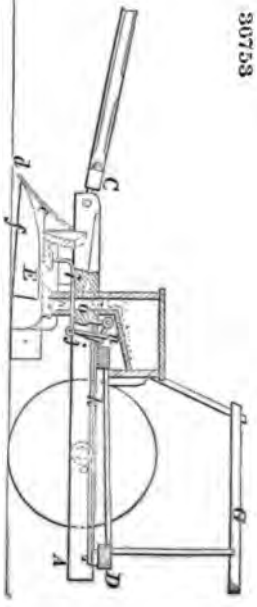

36754

6756

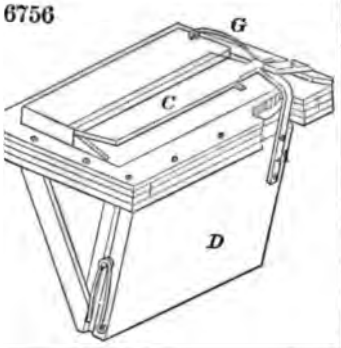

36755

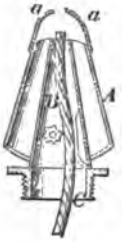

36757

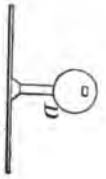

6758

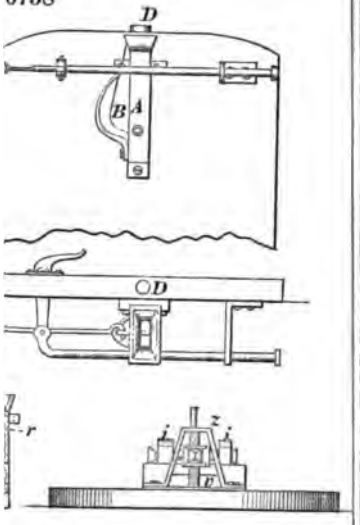

36759

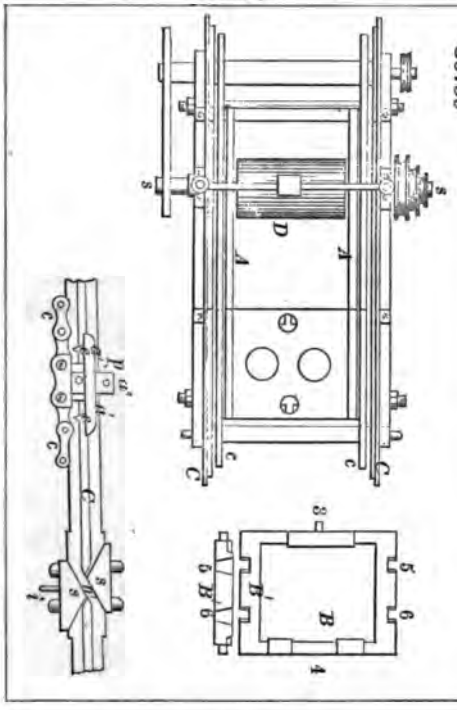

36761

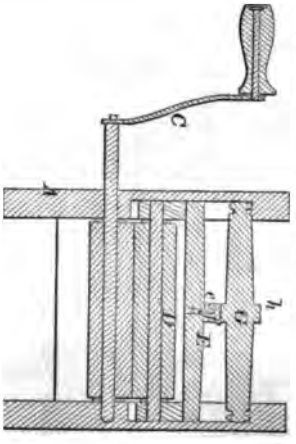

36760

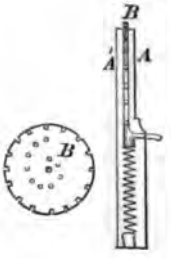

36762

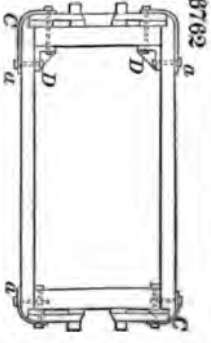

36763

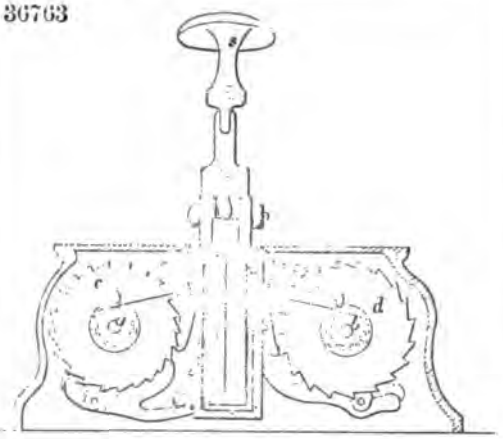

36764

36765

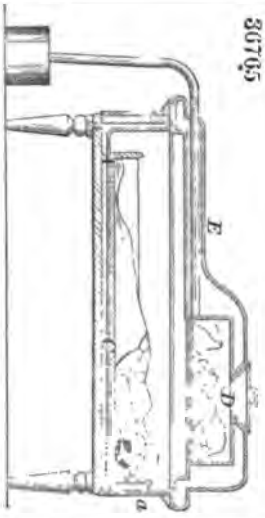

36766

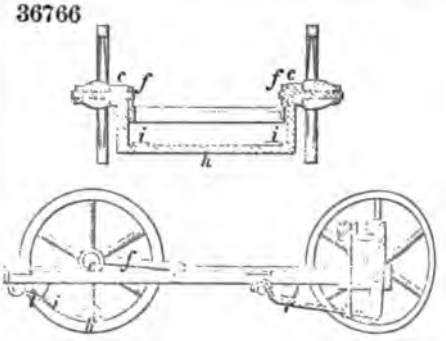

36768

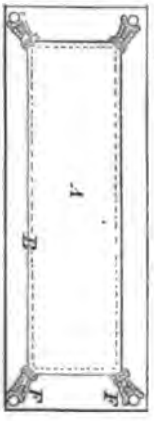

36767

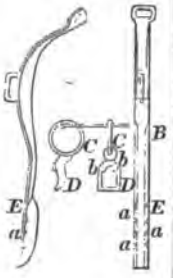

36769

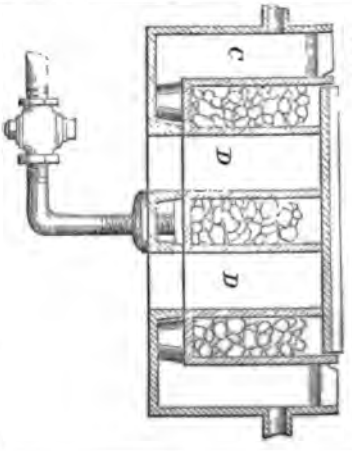

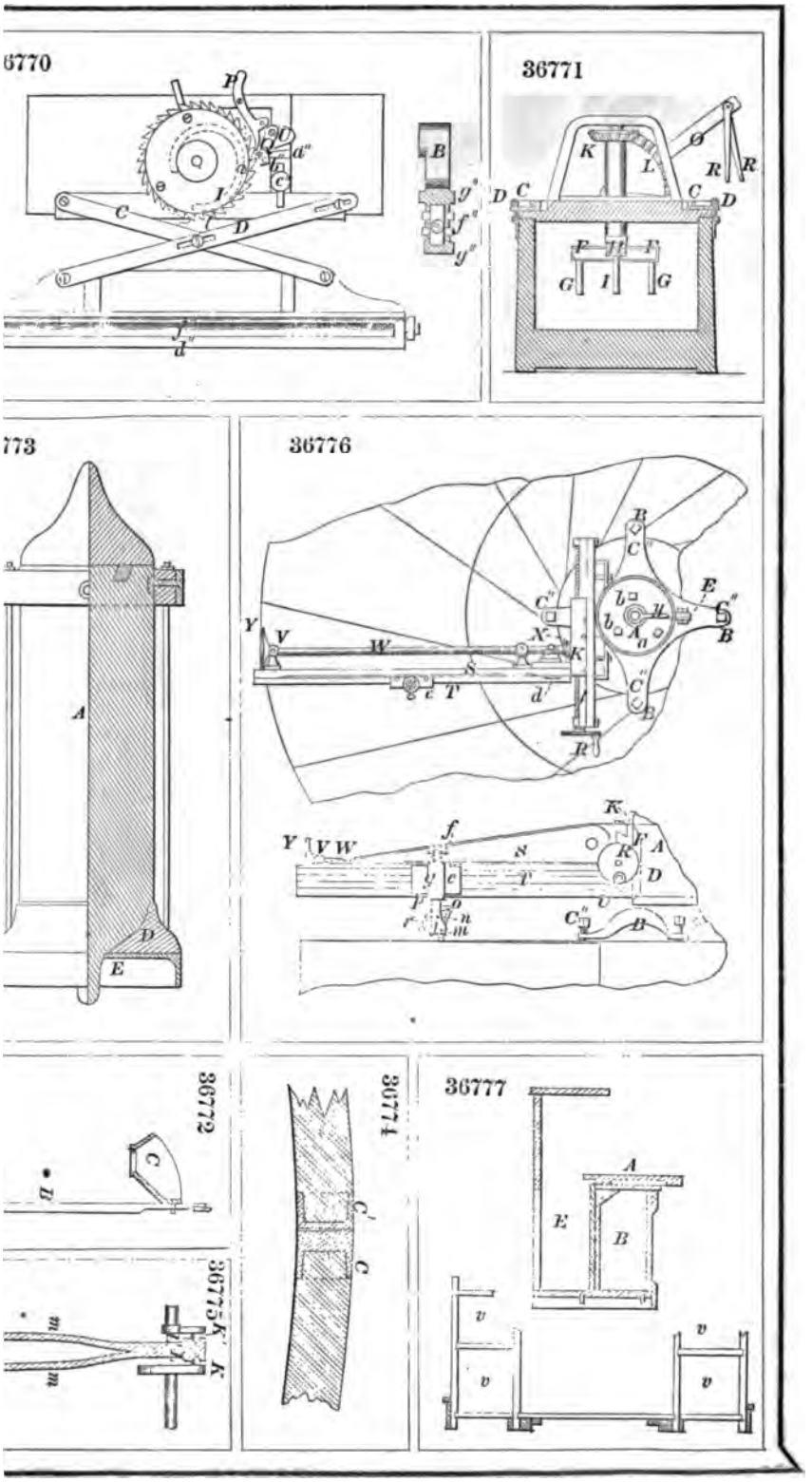
36770
36771
773
36776
36772
36774
36775
36777

36778

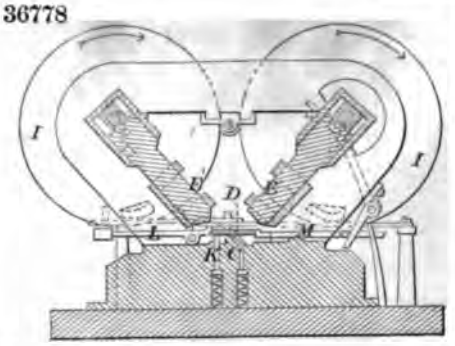

36781

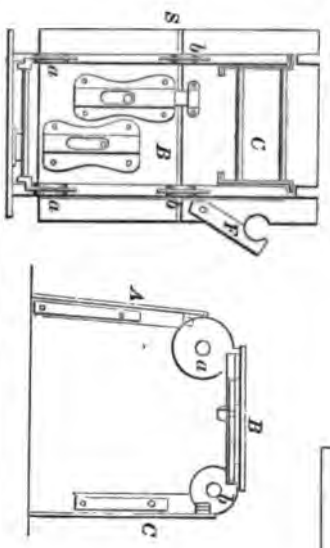

36780

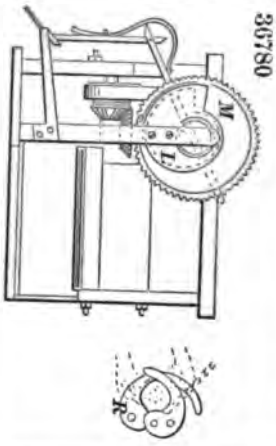

36782

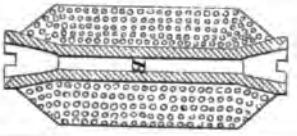

36783

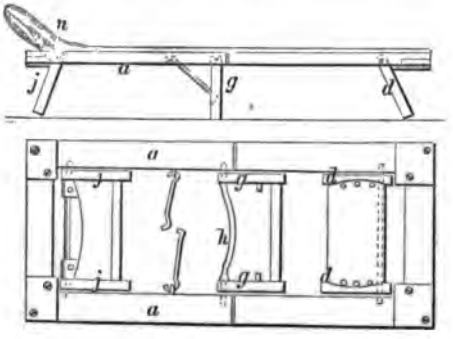

36784

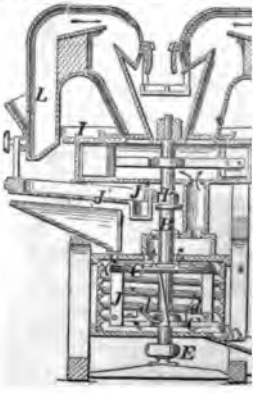

36786

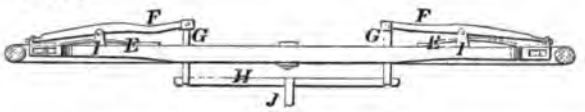

36785

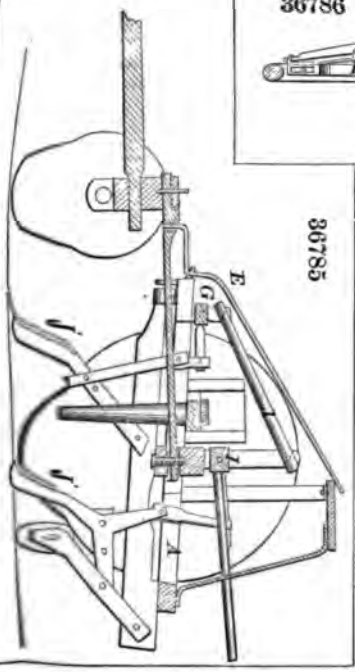

36787

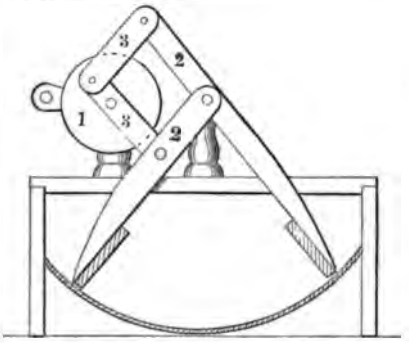

36788

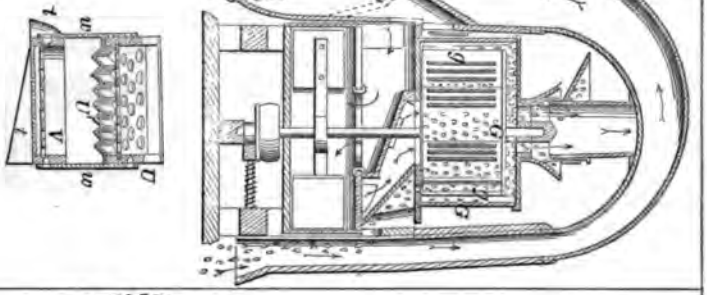

36789

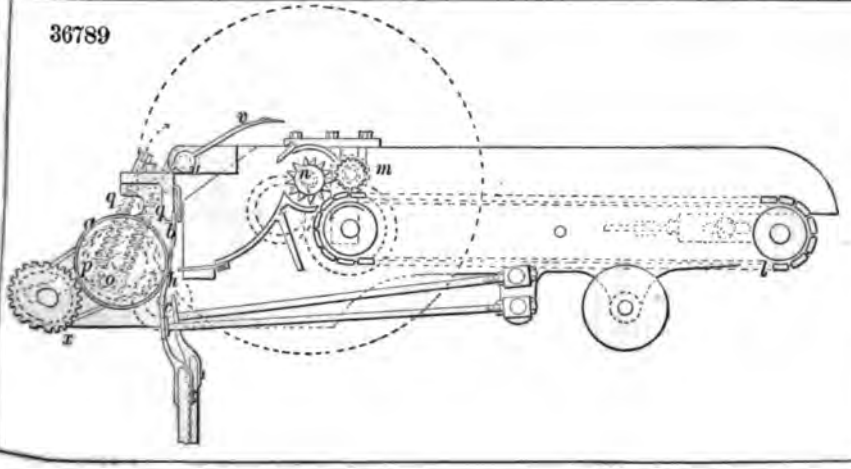

36791

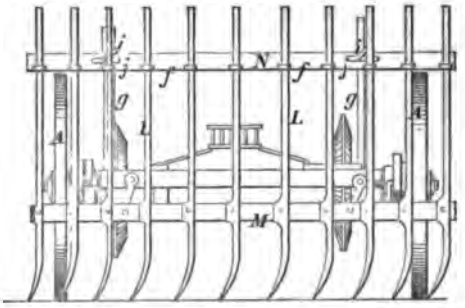

36790

36792

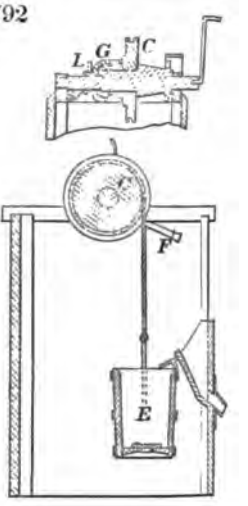

36795

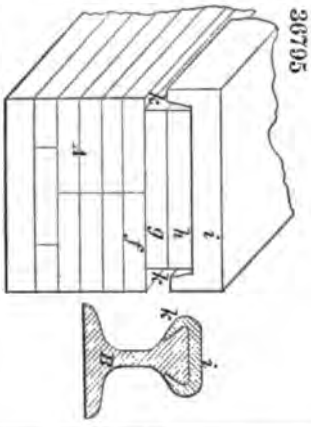

36796

36797

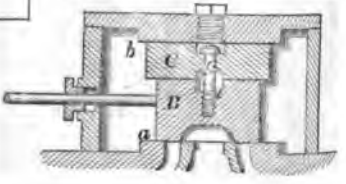

36798

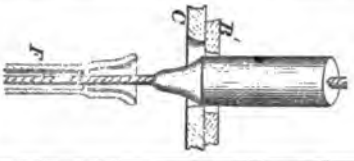

36800

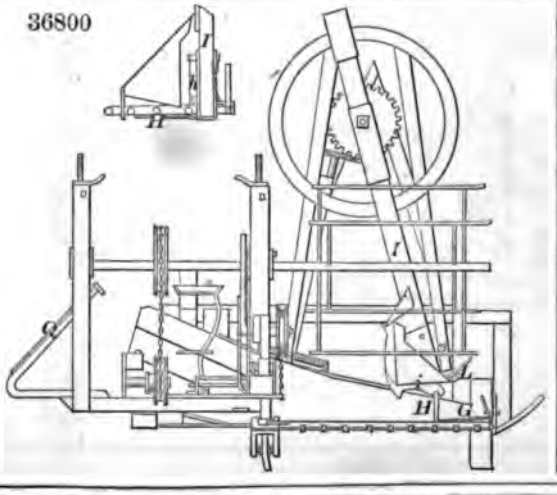

36799

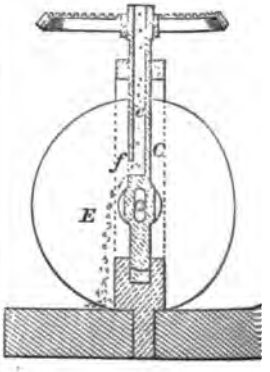

36801

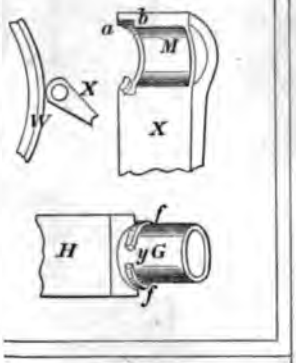

36802

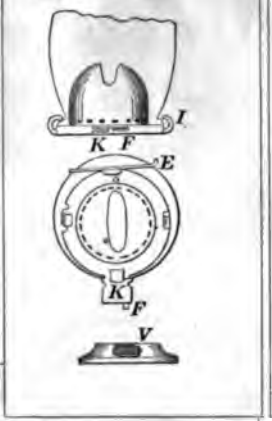

36804

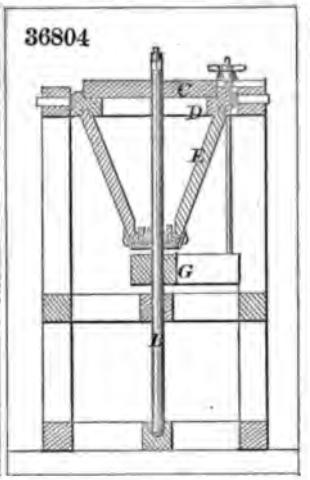

36803

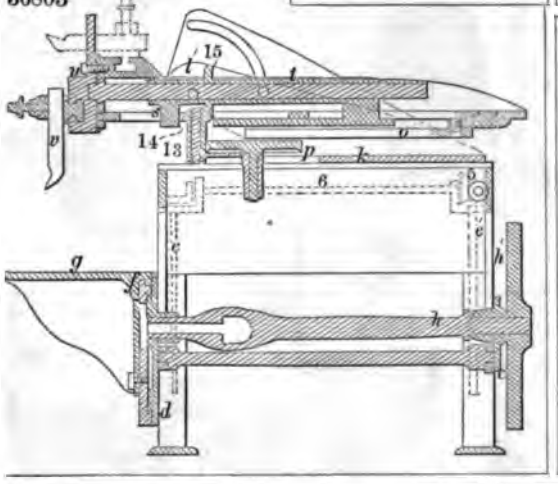

36807

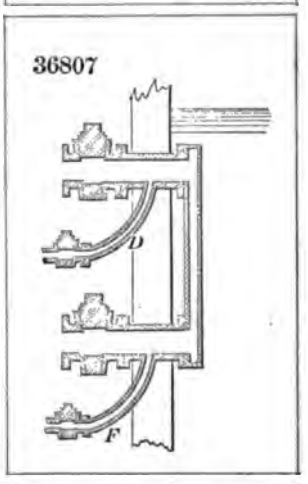

36805

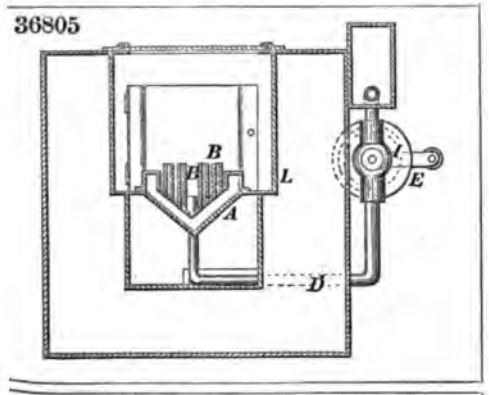

36808

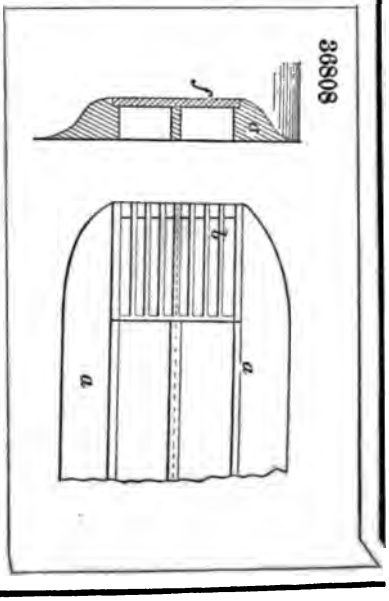

36806

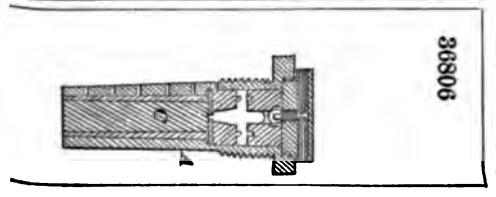

36810

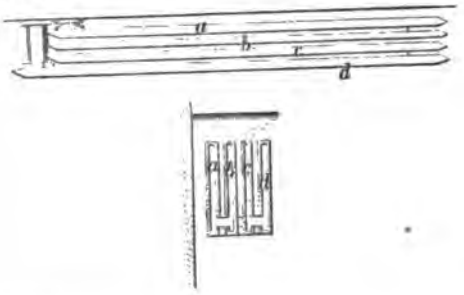

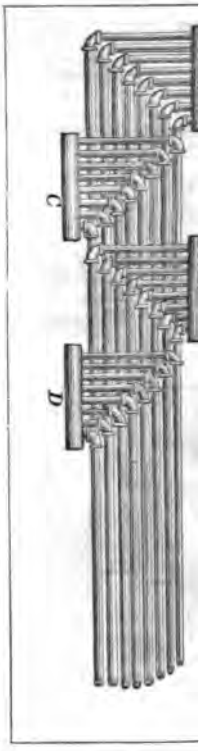

36811

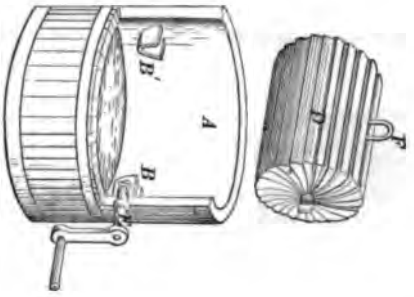

36812

36814

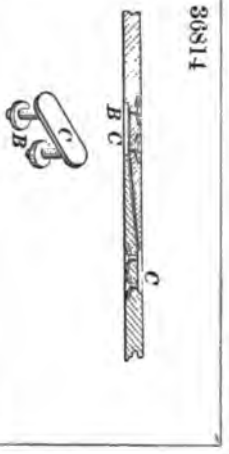

36813

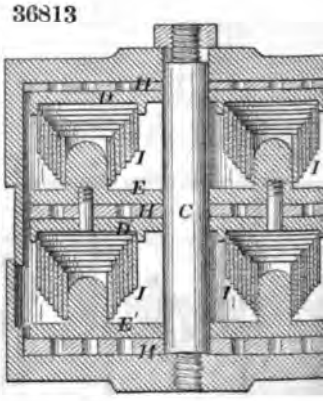

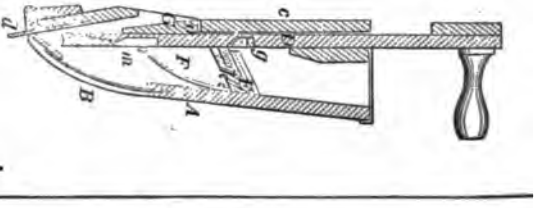

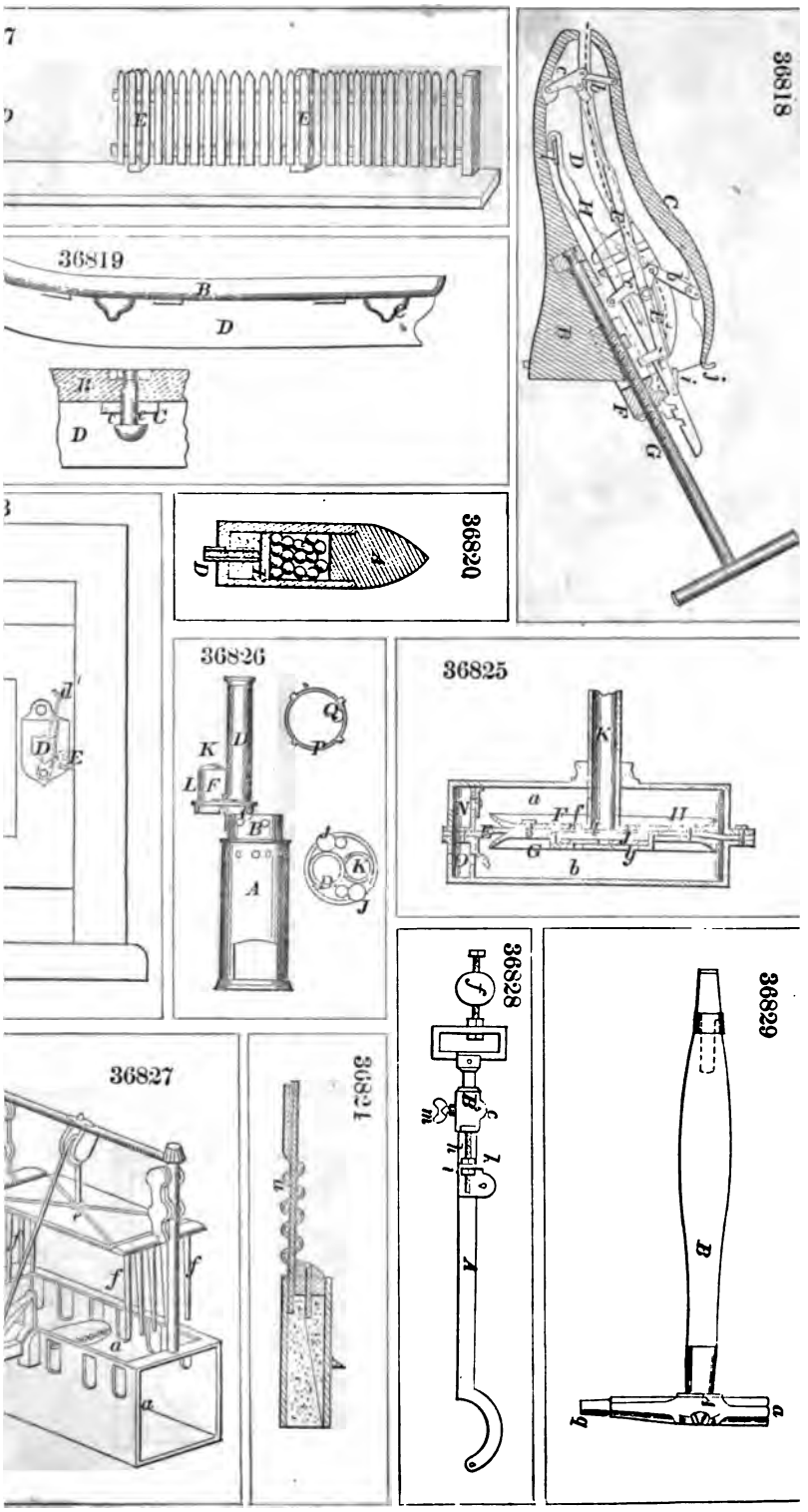
36818
36819
36820
36825
36826
36827
36828
36829
36831

36830

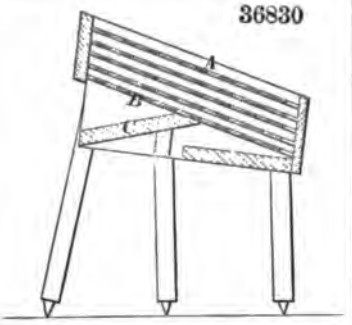

36831

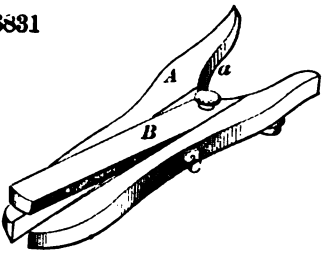

36833

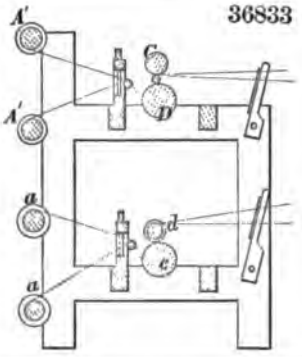

36832

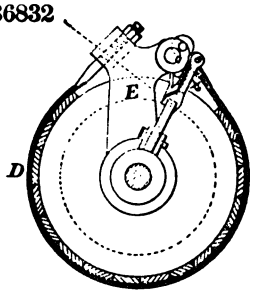

36834

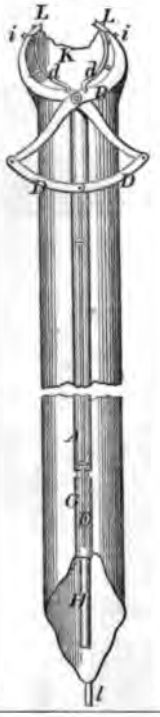

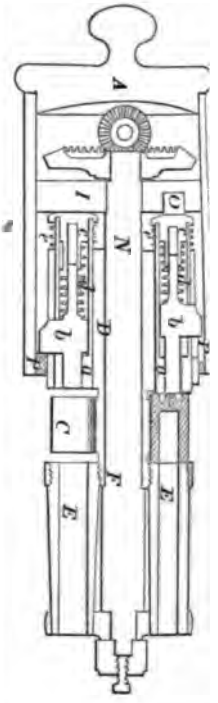

36835

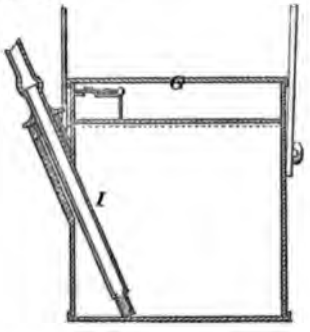

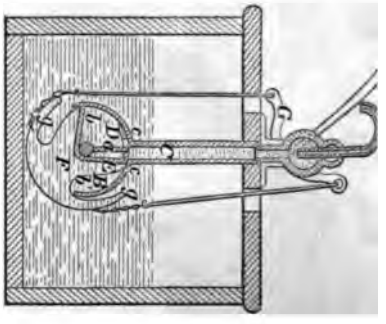

36838

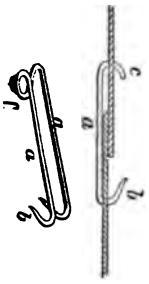

36839

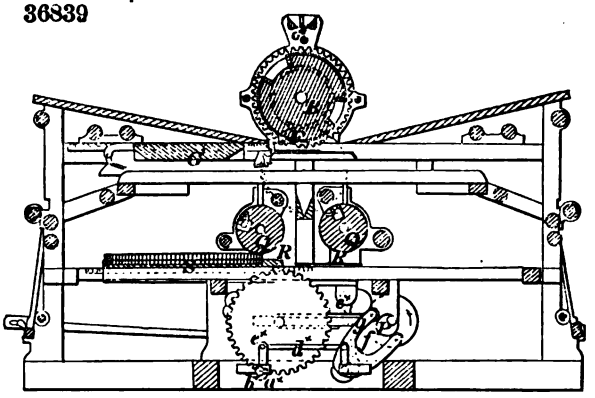

36840

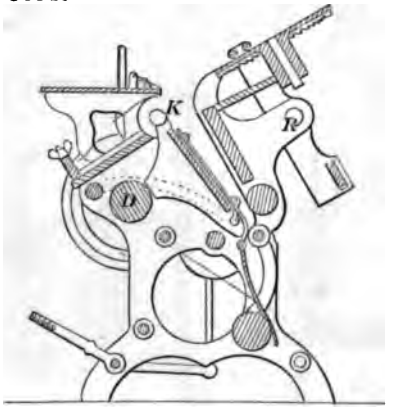

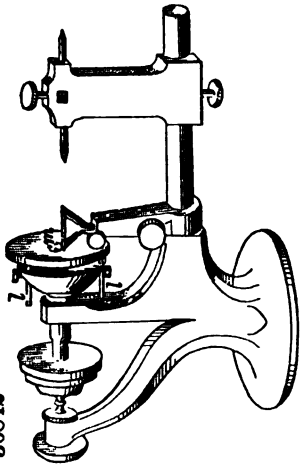

36842

36841

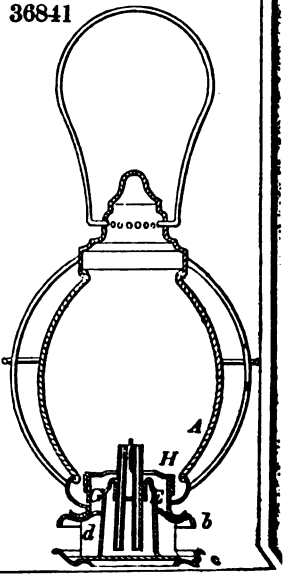

36843

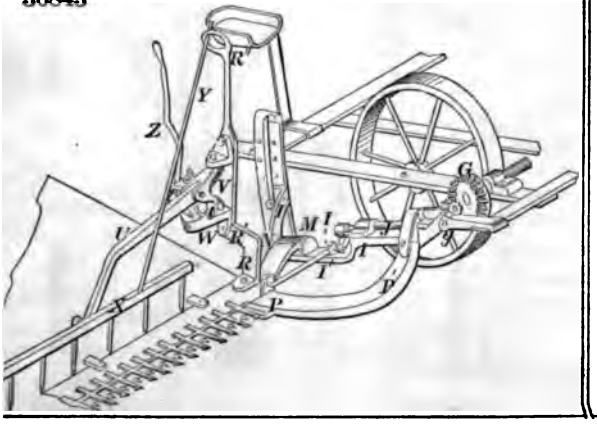

36844

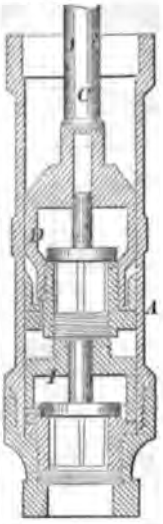

36848

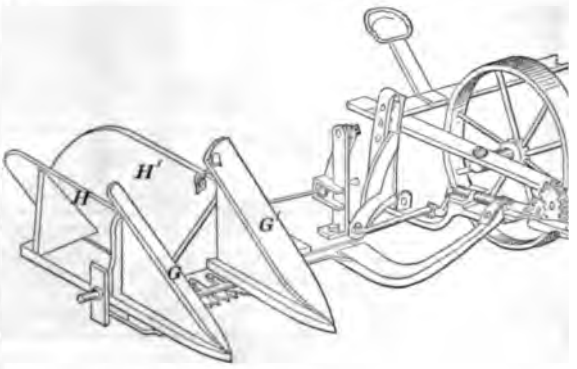

36847

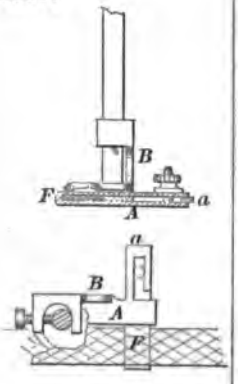

36845

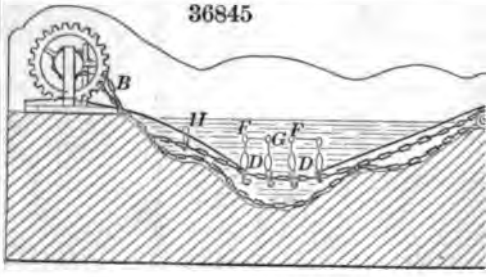

36849

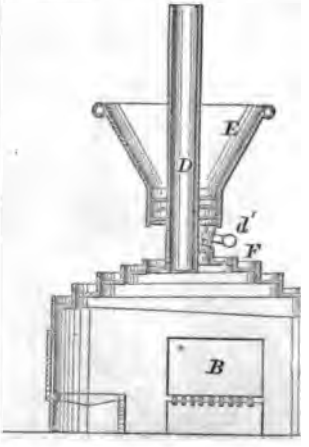

36846

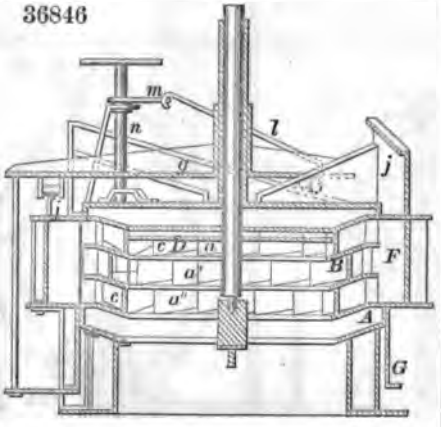

6850

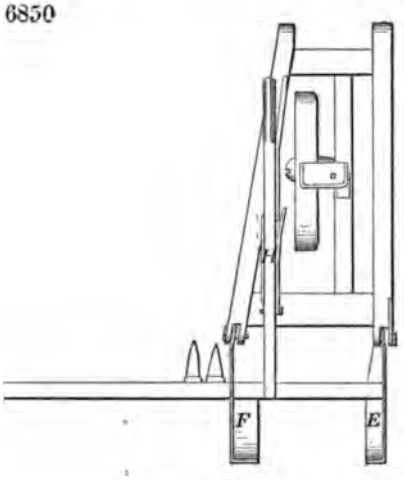

36851

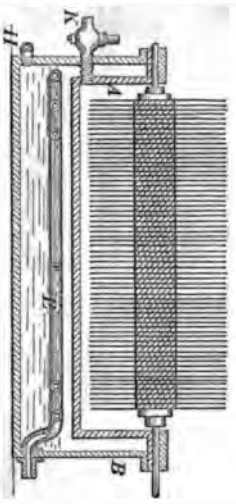

36852

36853

36856

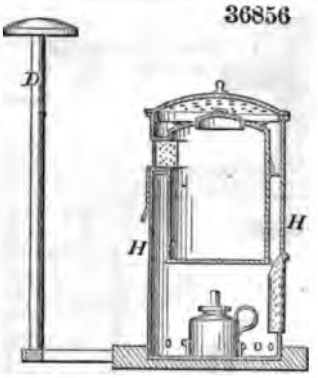

36855

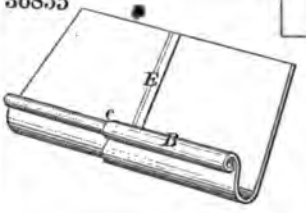

36857

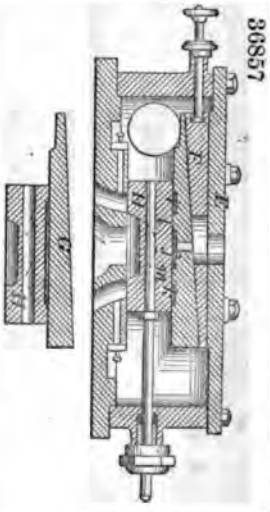

36854

36858

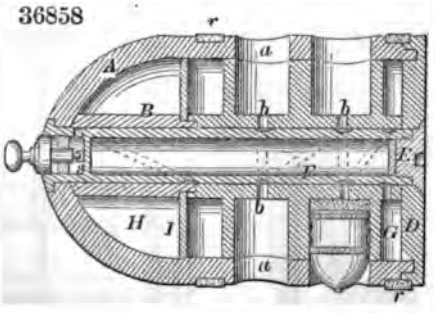

36859

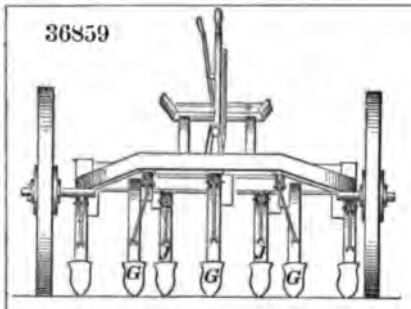

36861

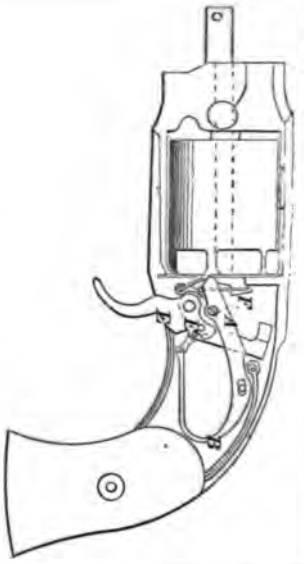

36862

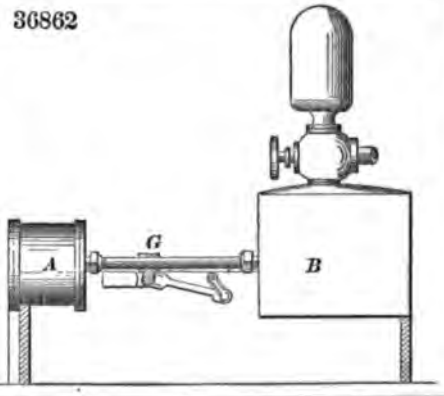

36860

36864

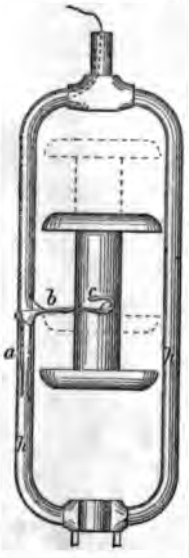

36865

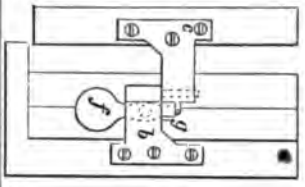

36866

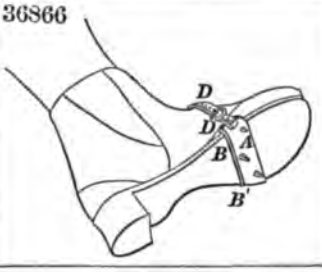

36867

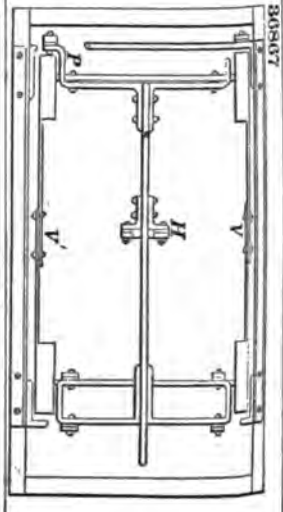

36863

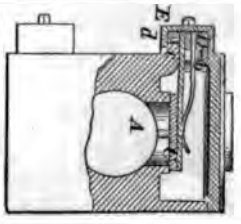

36868

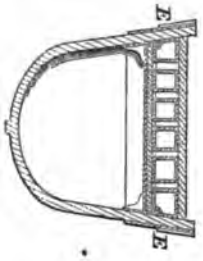

36869

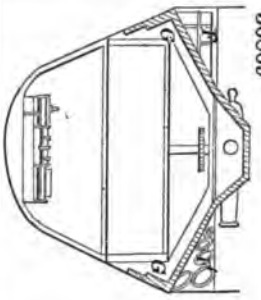

36870

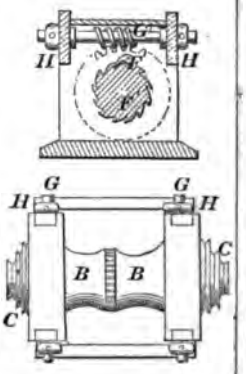

36871

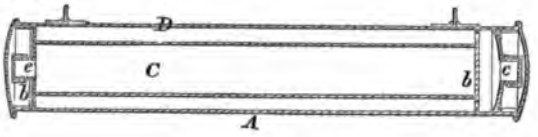

36872

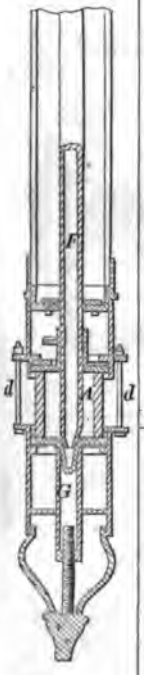

36877

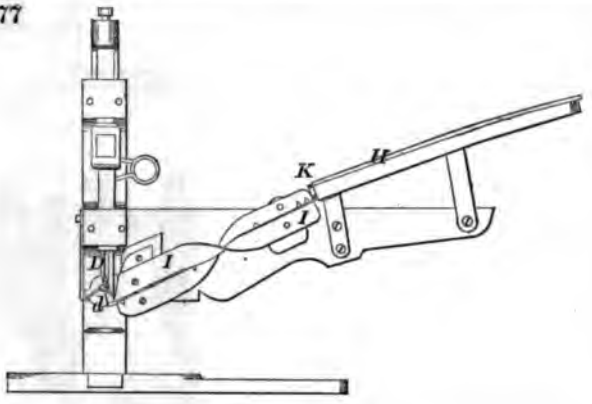

36875

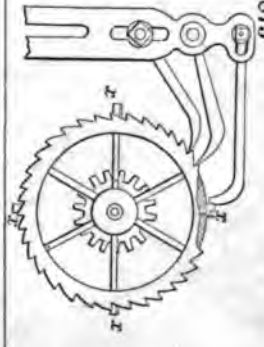

36876

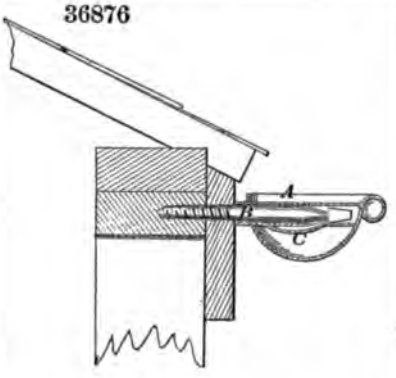

36878

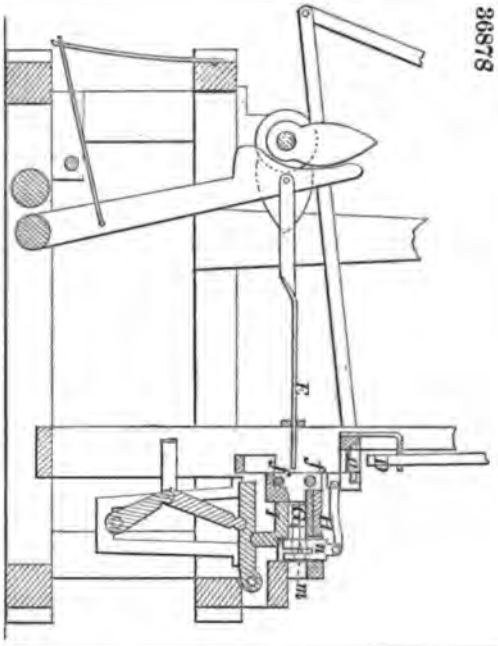

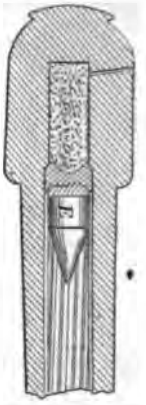

36880

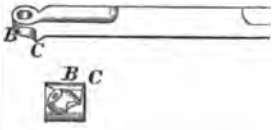

36881

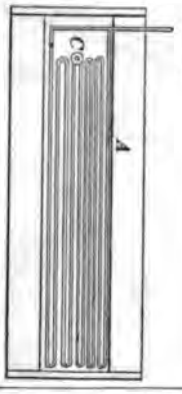

36882

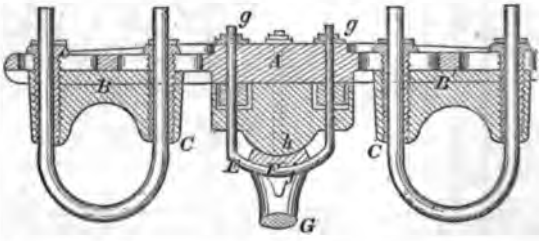

36883

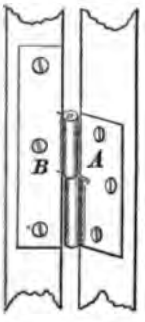

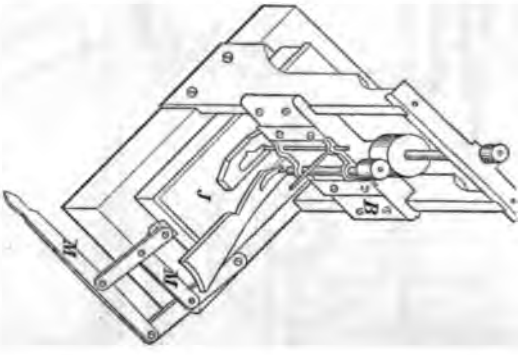

36885

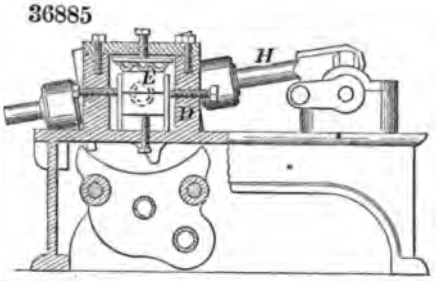

36886

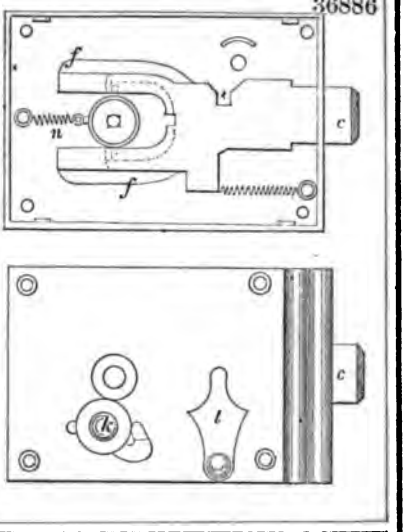

36887

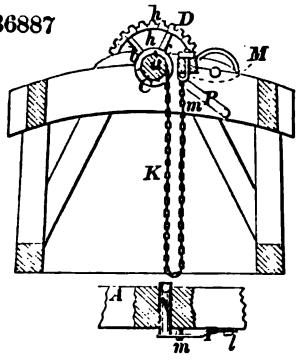

36889

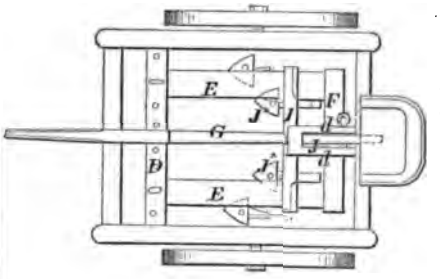

36888

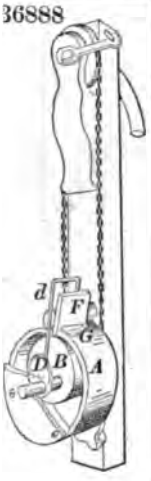

36890

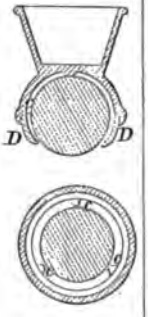

36893

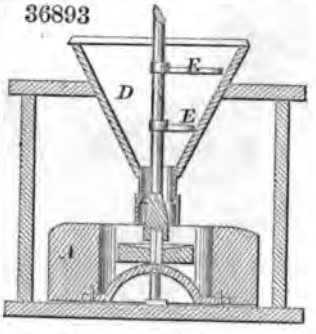

36892

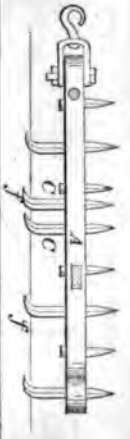

36891

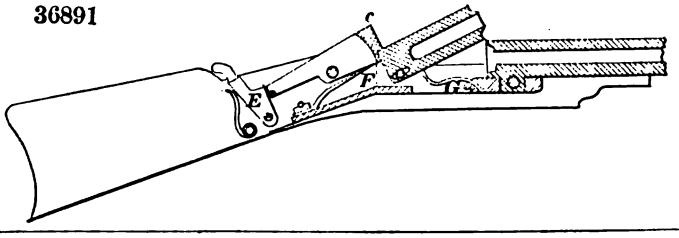

36894

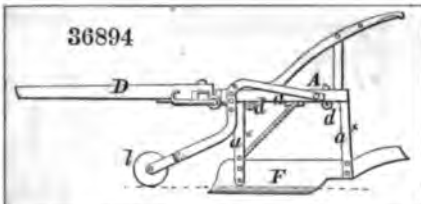

36895

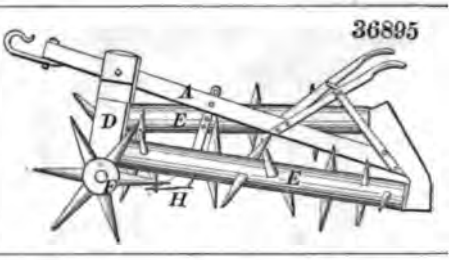

36896

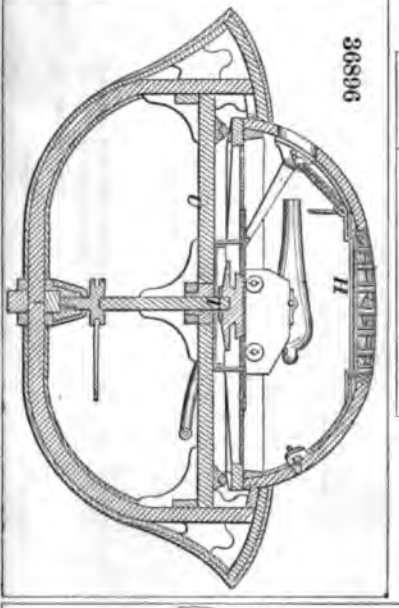

36900

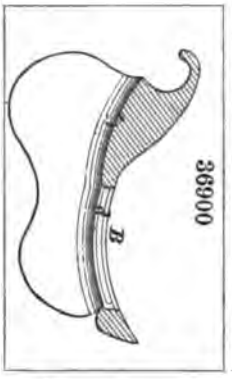

36897

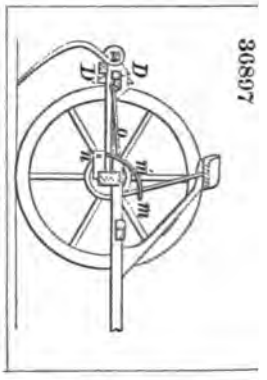

36898

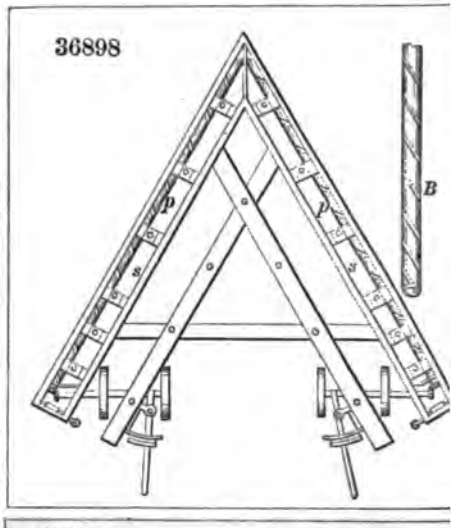

36901

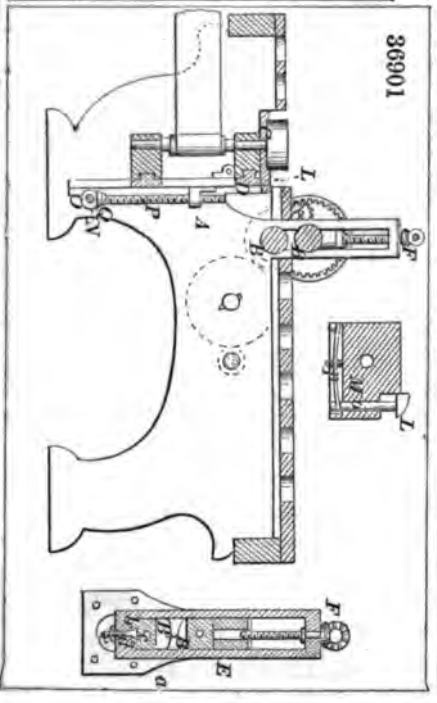

36899

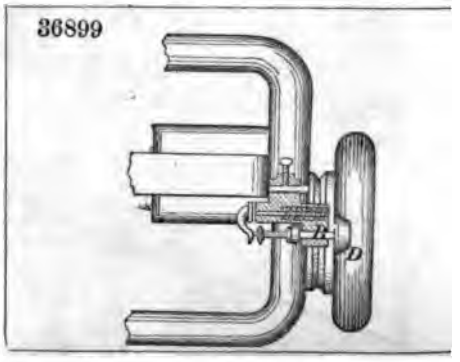

36902

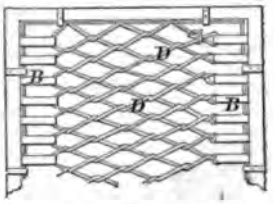

36904

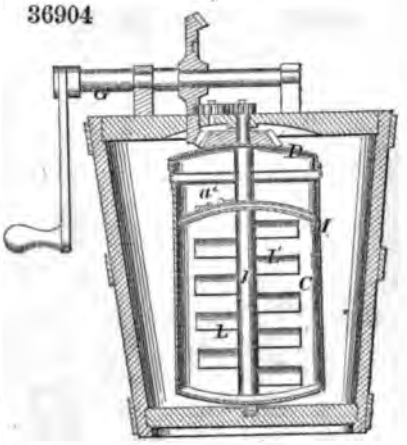

36903

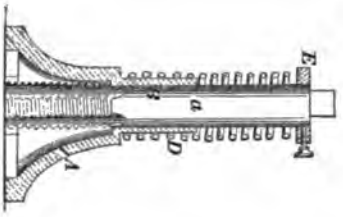

36907

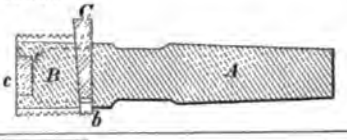

36905

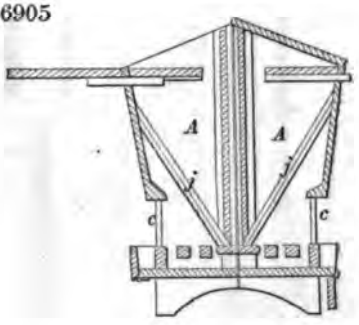

36906

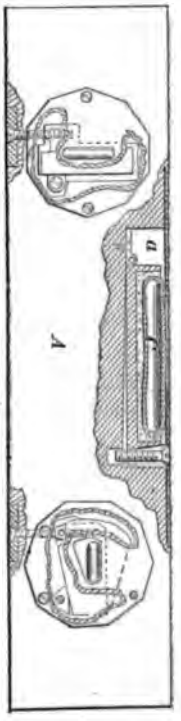

36908

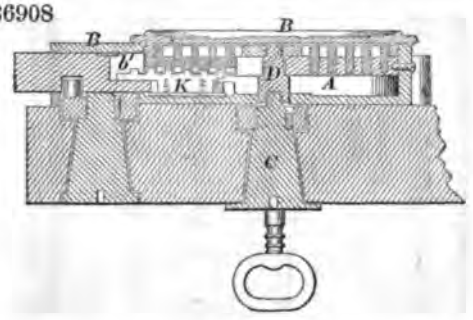

36909

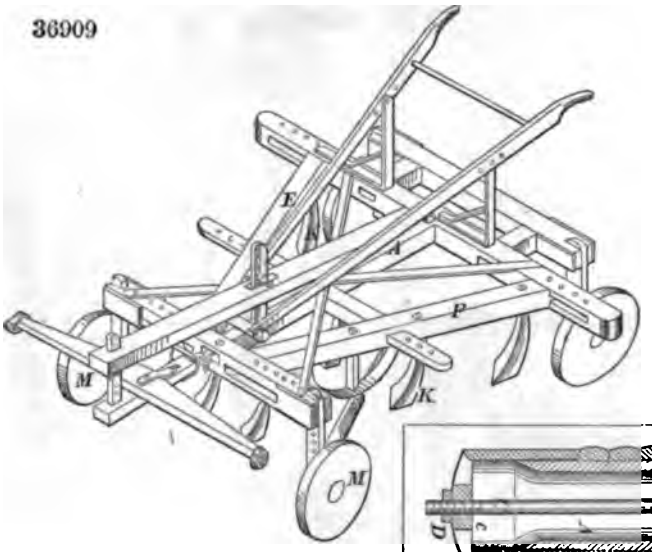

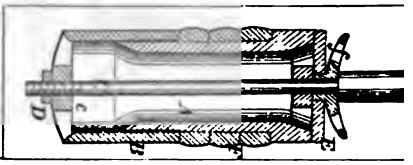

36910

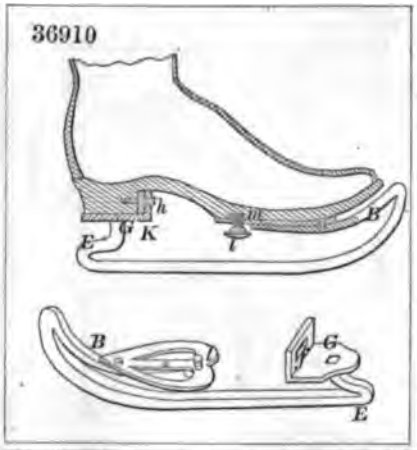

36913

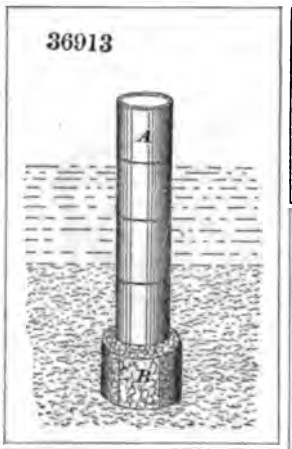

36911

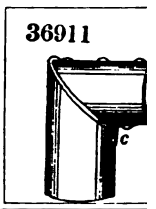

36914

36915

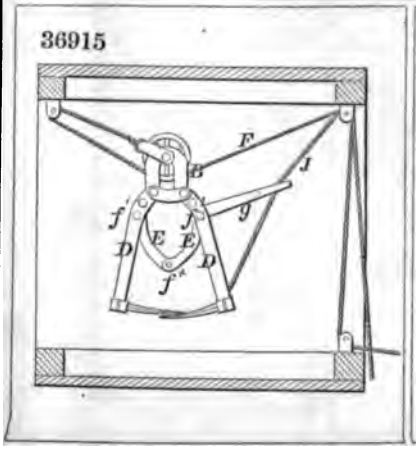

36916

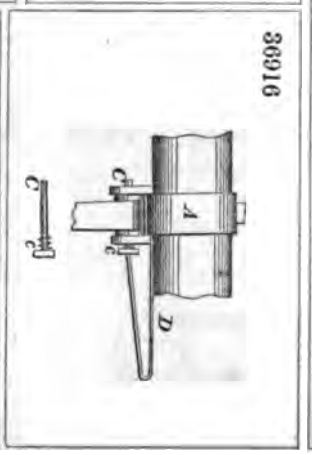

36917

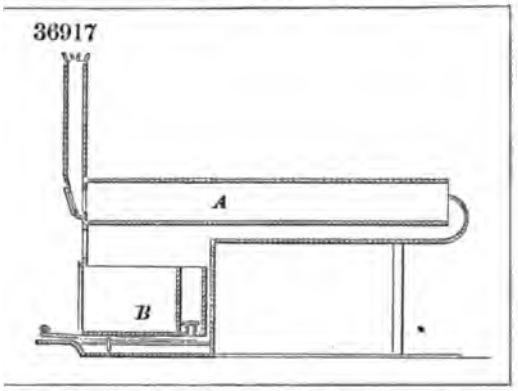

36918

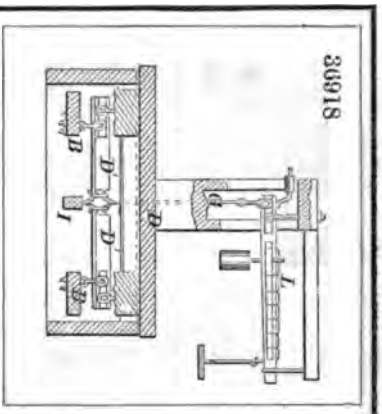

36920

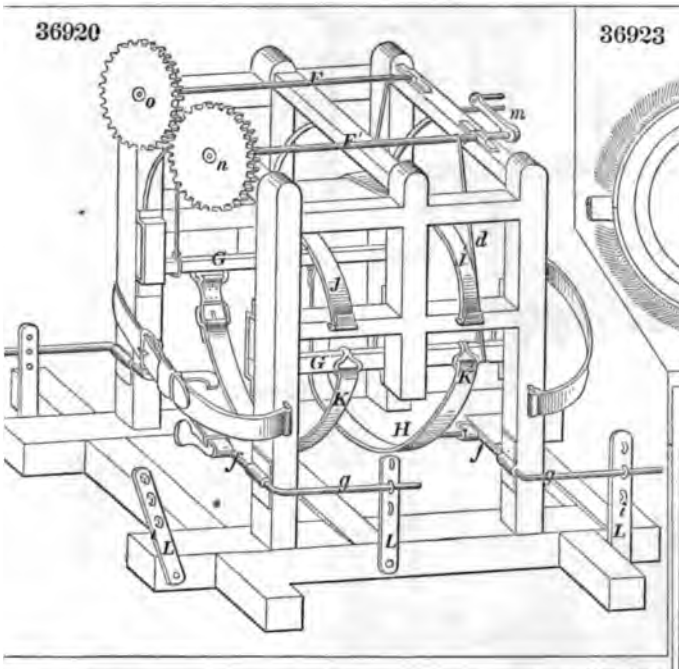

36923

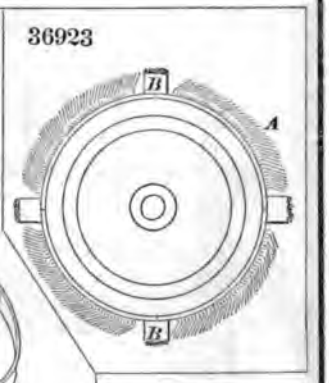

36919

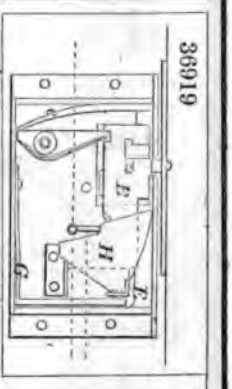

36922

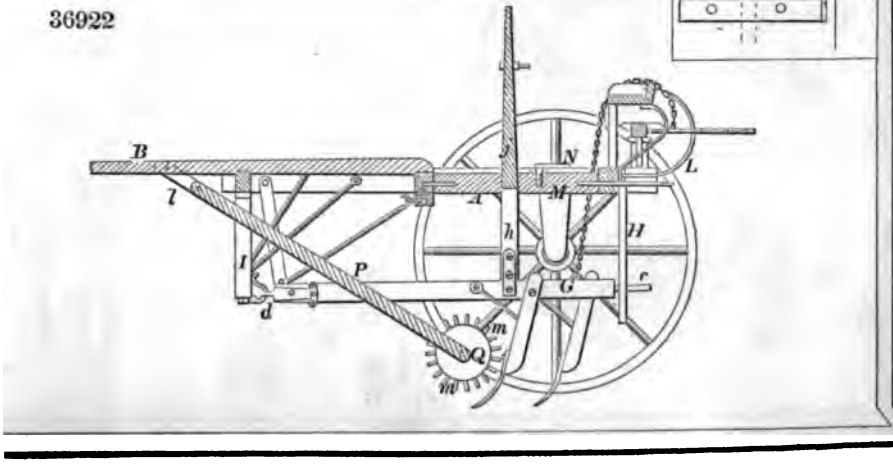

36924

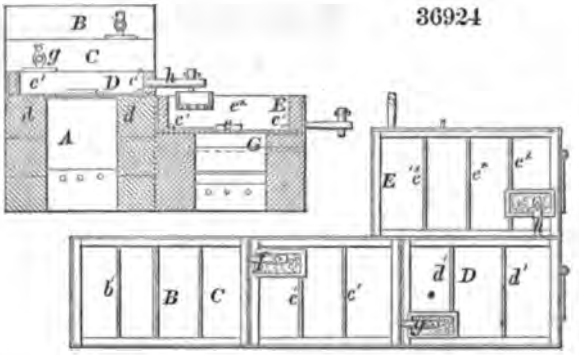

36925

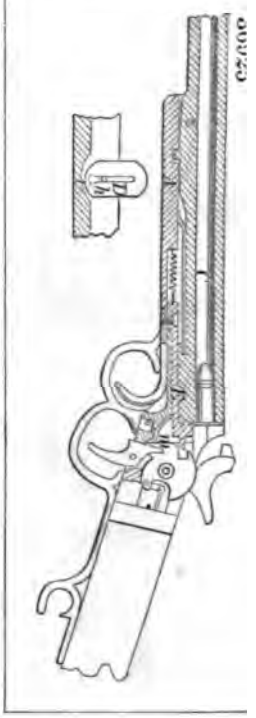

36926

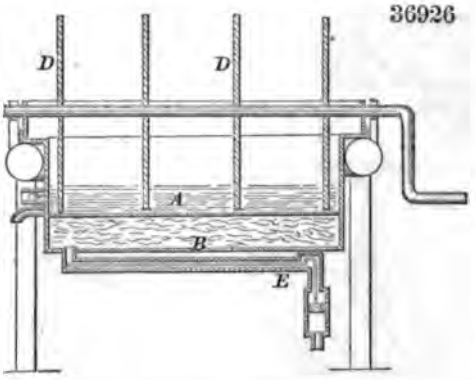

36927

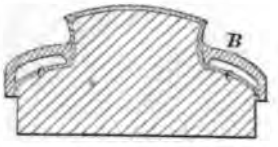

36928

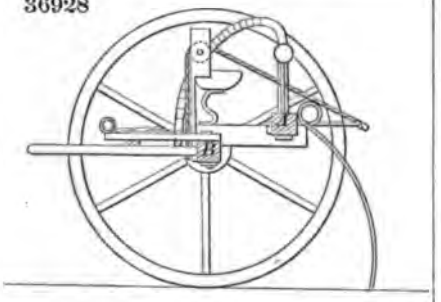

36929

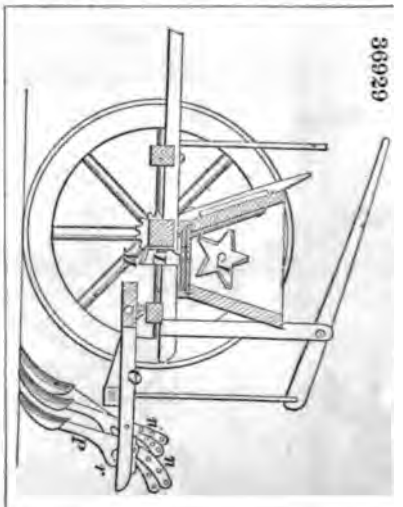

36930

36932

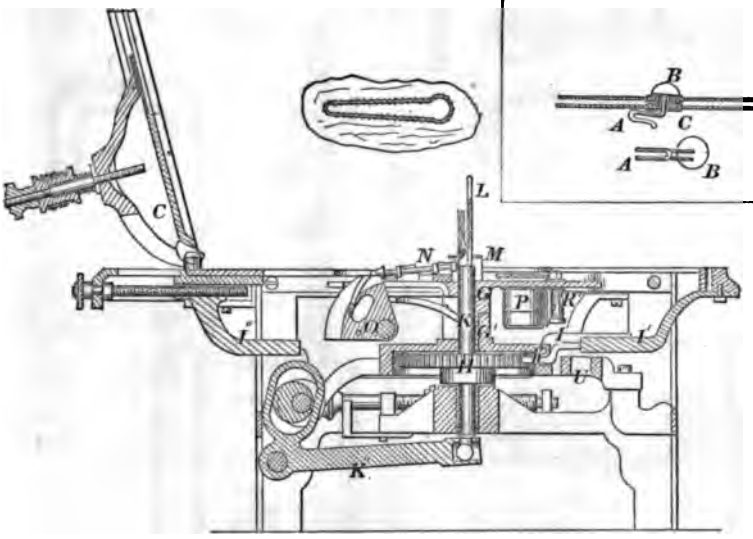

36933

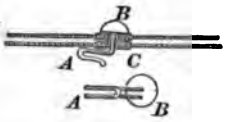

36931

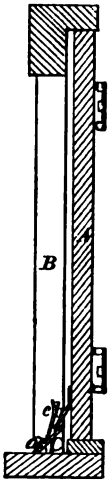

36935

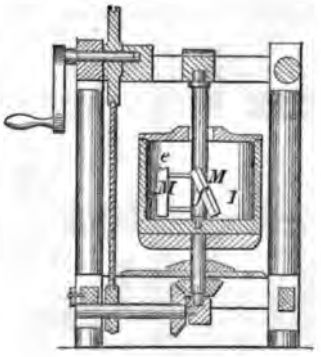

36934

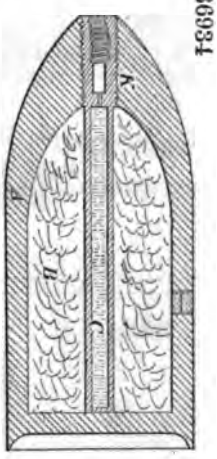

36937

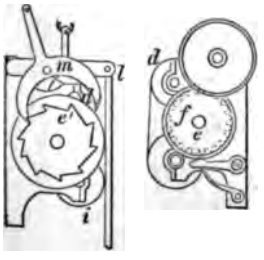

36936

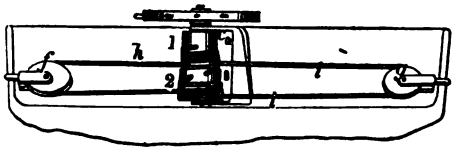

36938

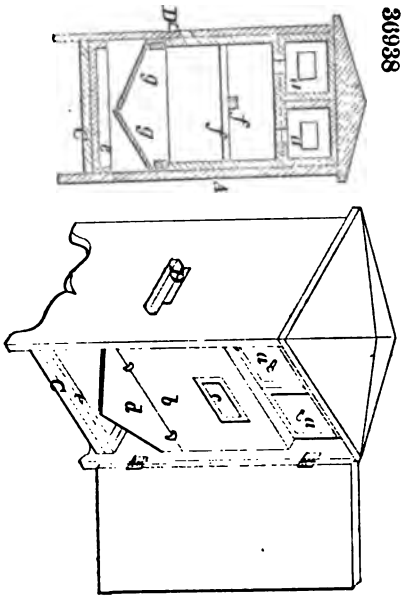

36939

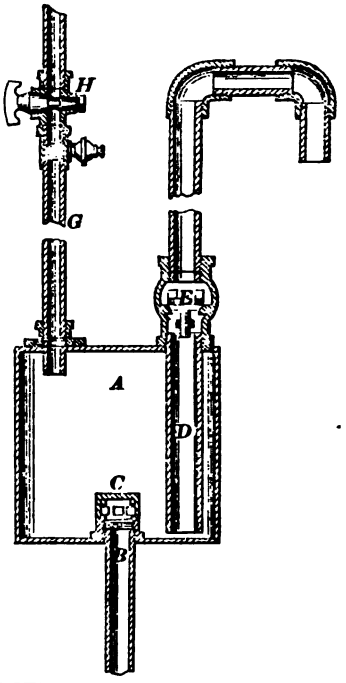

36940

36941

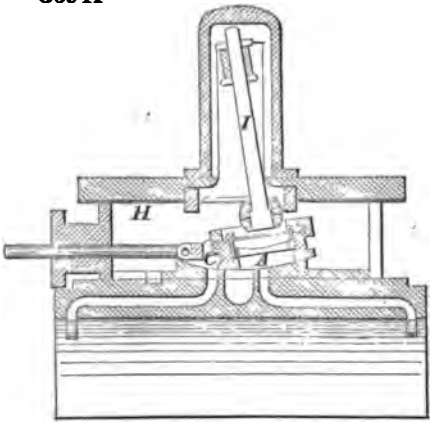

36942

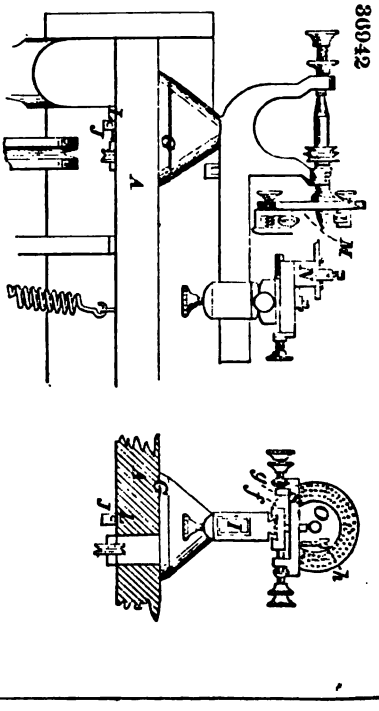

36943

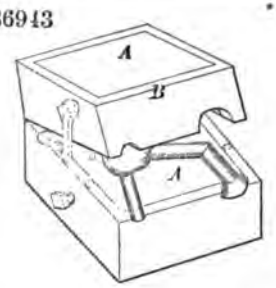

36944

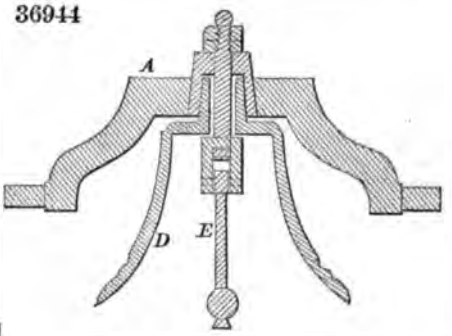

36945

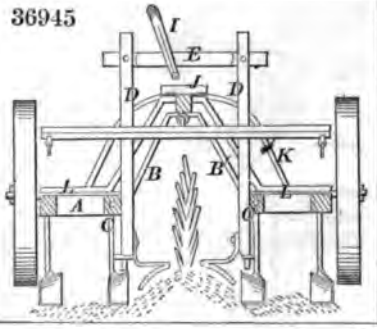

36947

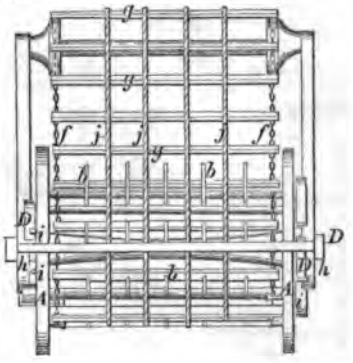

36946

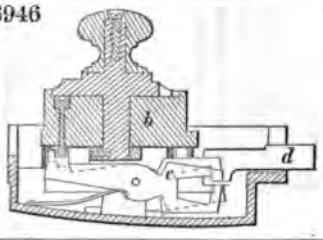

36948

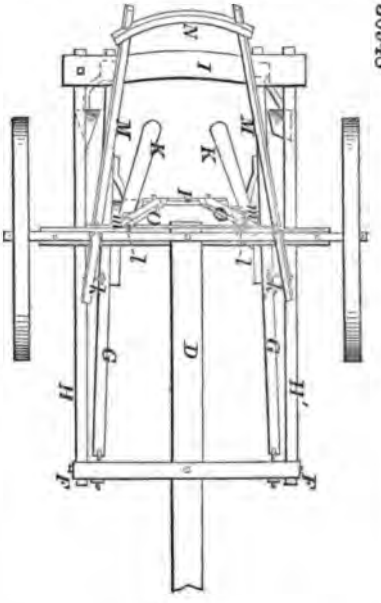

36949

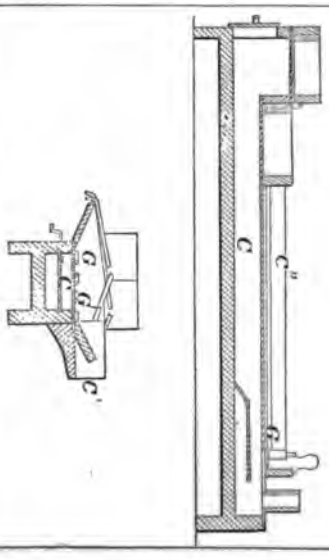

36950

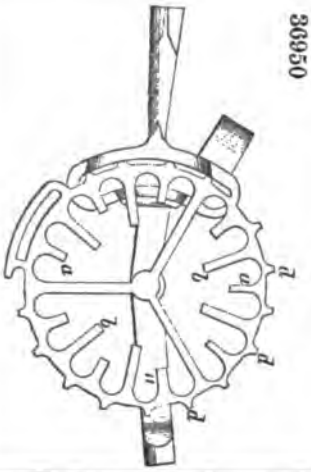

36952

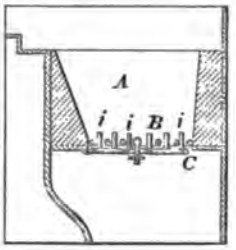

36951

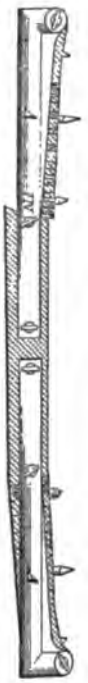

36953

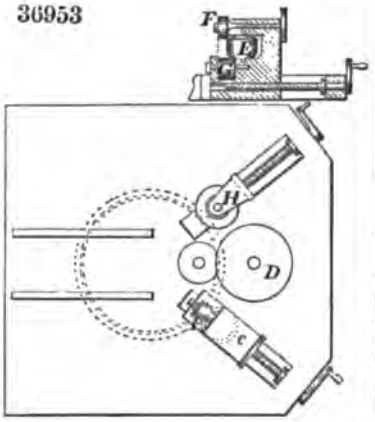

36956

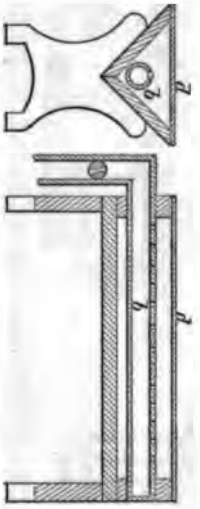

36954

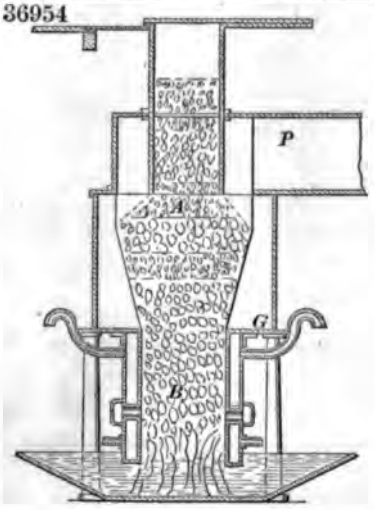

36955

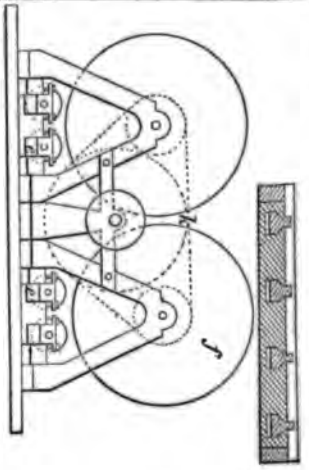

36957

36958

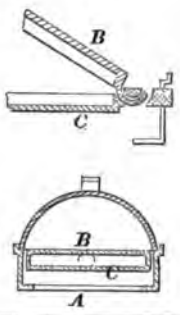

36959

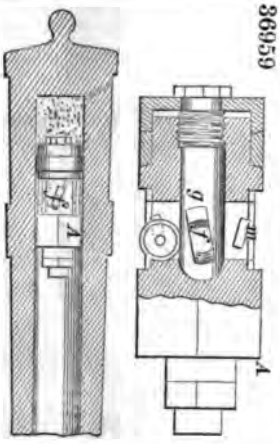

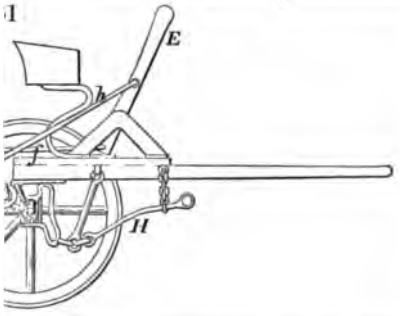

36960

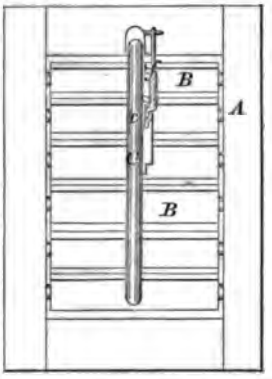

36964

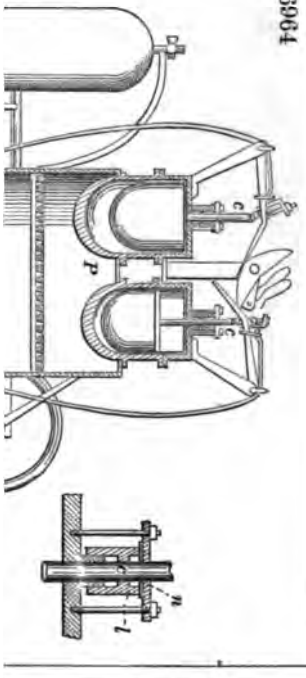

36963

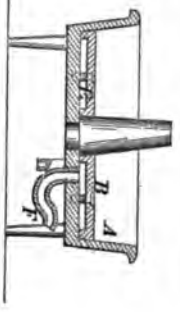

36962

36965

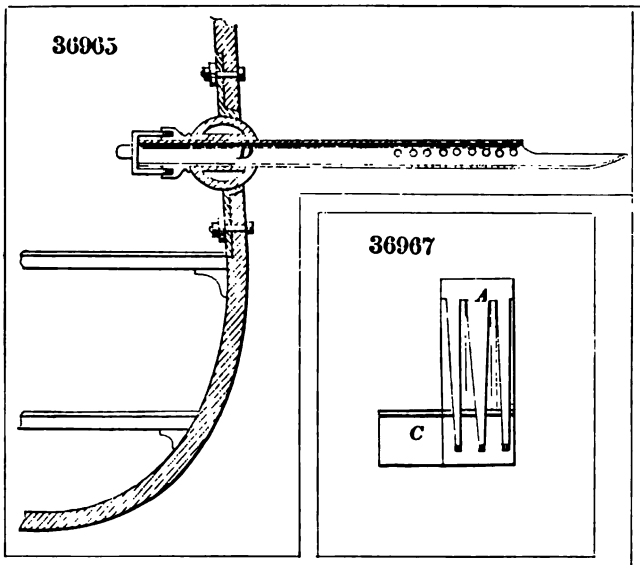

36967

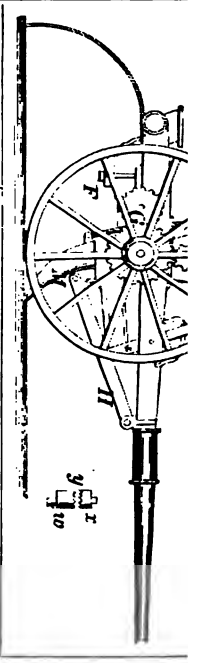

36968

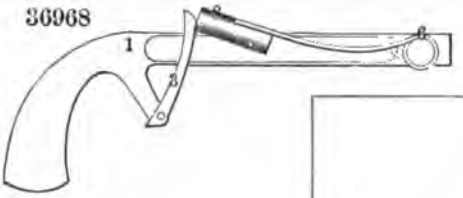

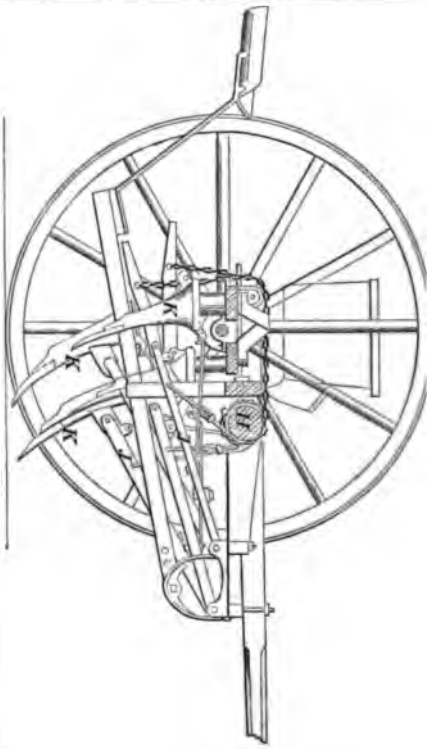

36970

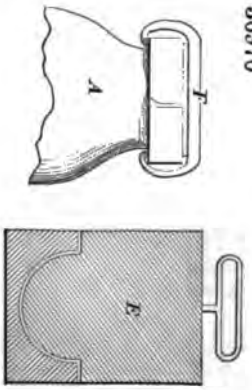

36971

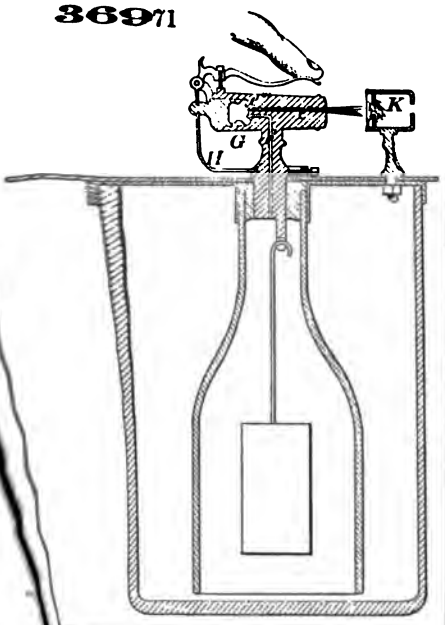

36973

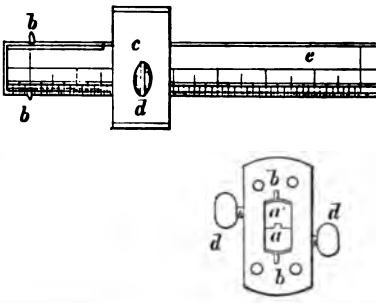

36975

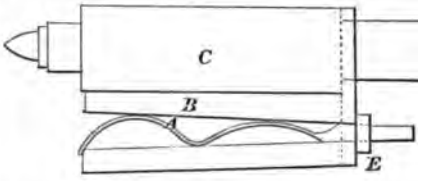

36978

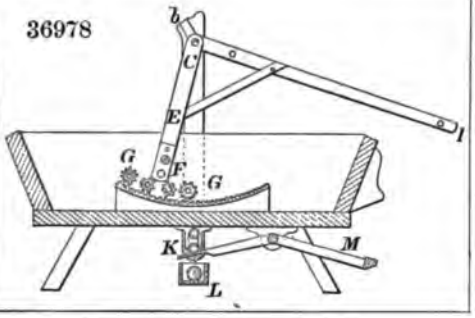

36976

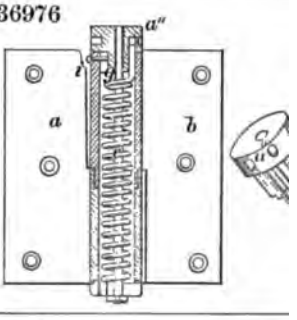

36974

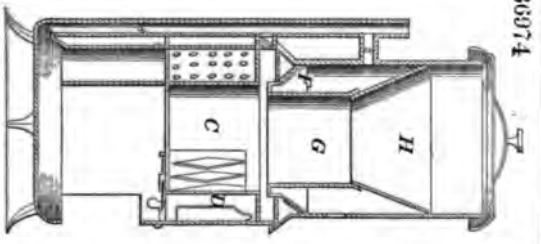

36977

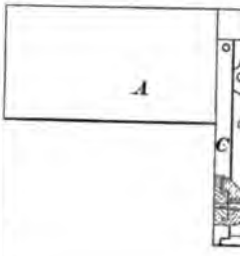

36972

36981

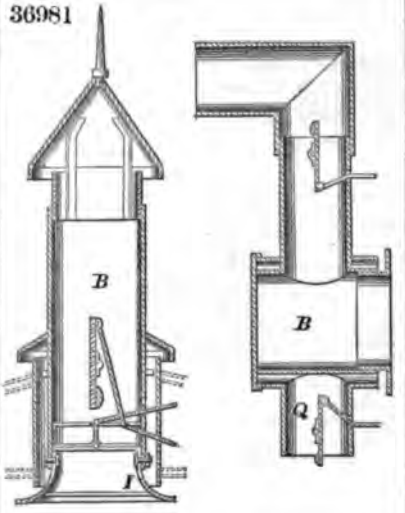

36980

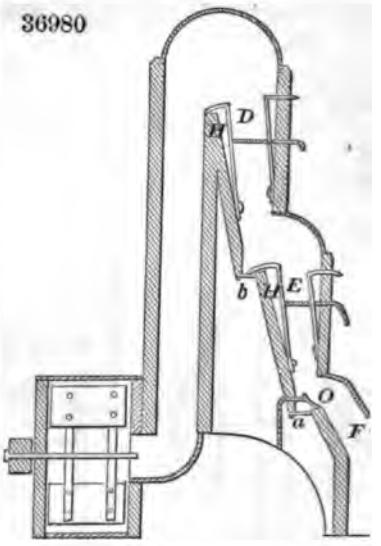

36979

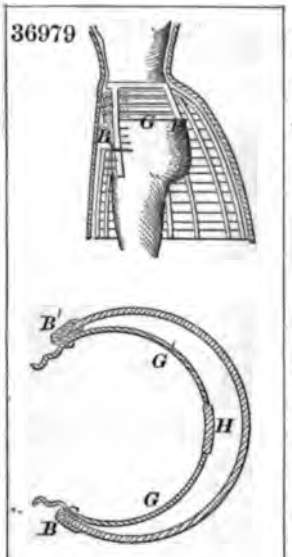

36982

36983

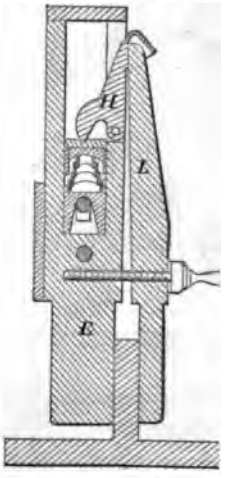

36984

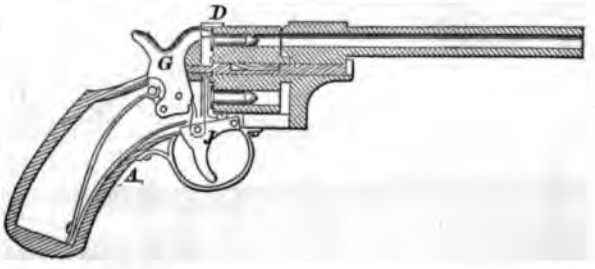

36985

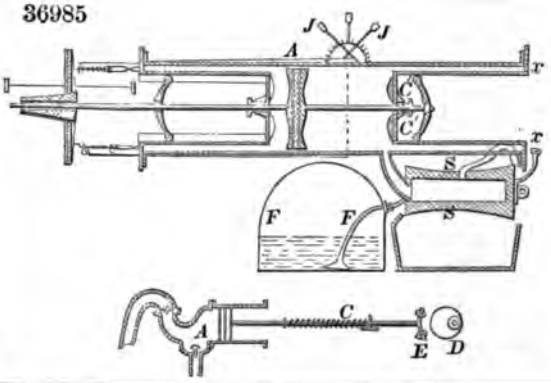

36989

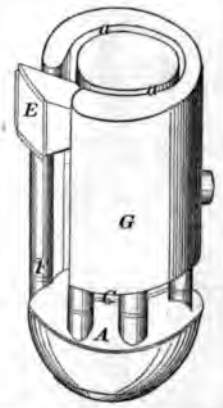

36987

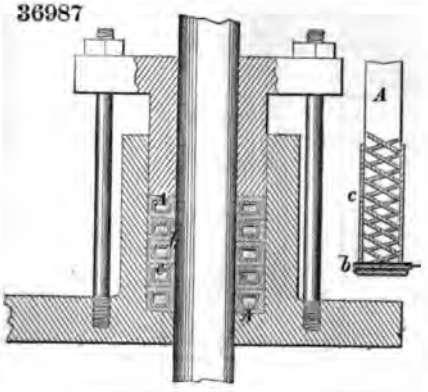

36991

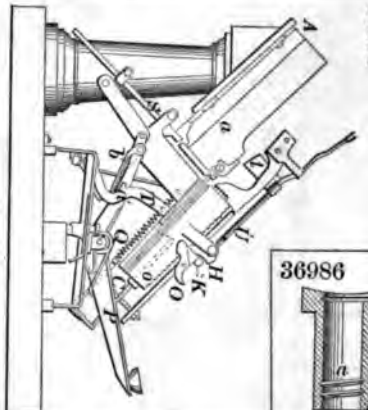

36986

36990

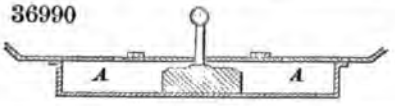

36992

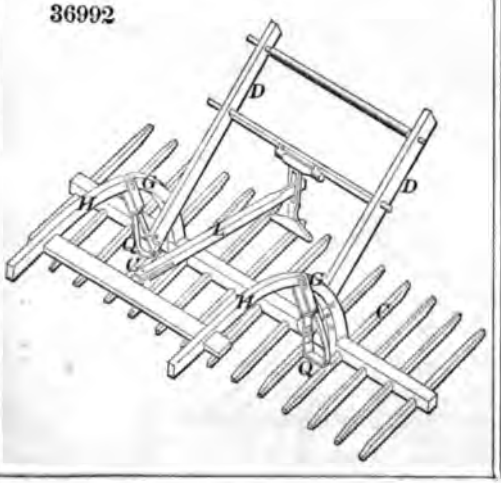

36993

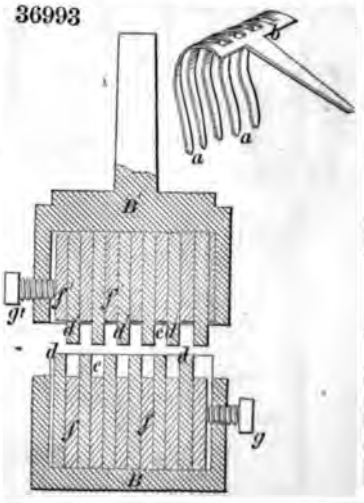

36995

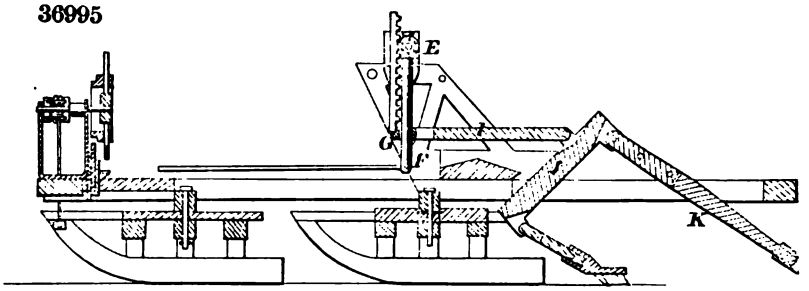

36994

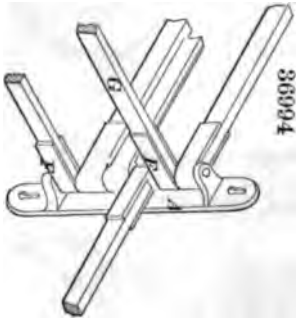

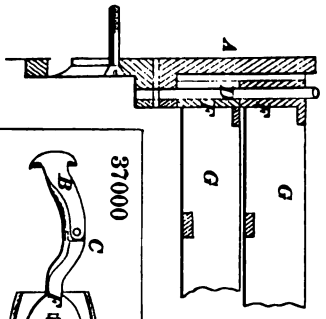

36996

36997

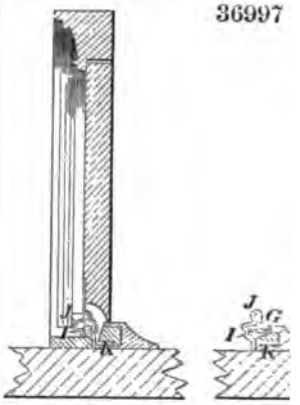

36998

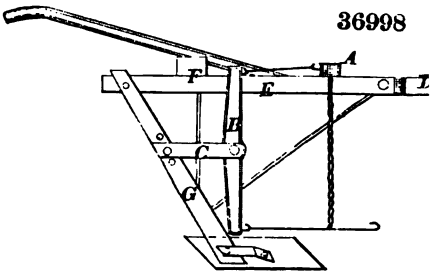

37000

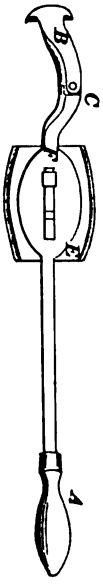

36999

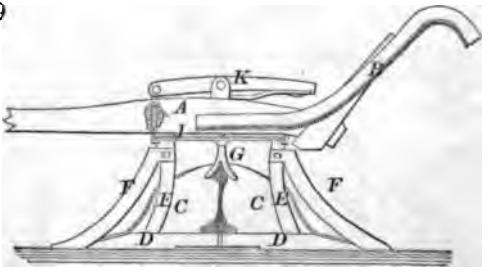

37001

37003

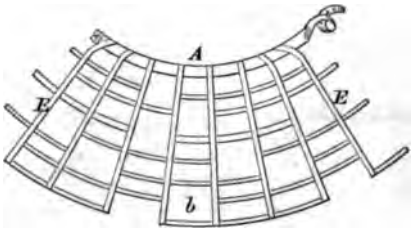

37004

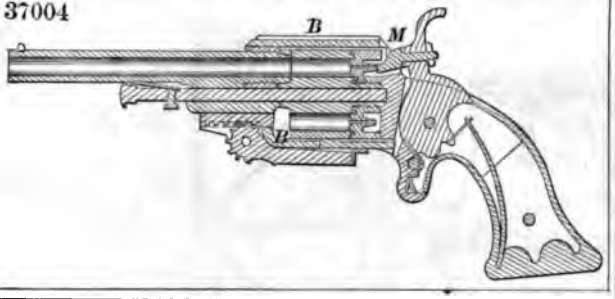

37002

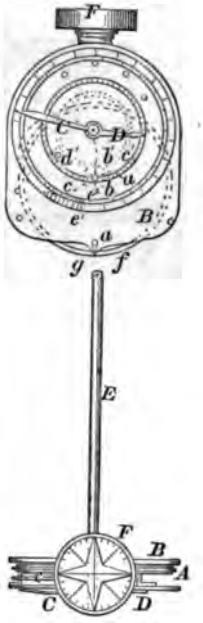

37005

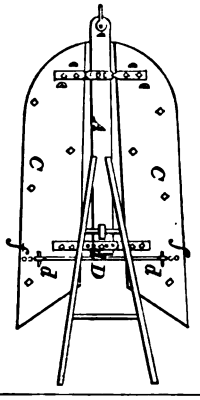

37008

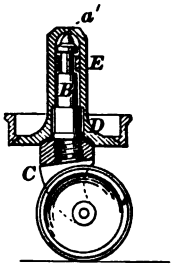

37007

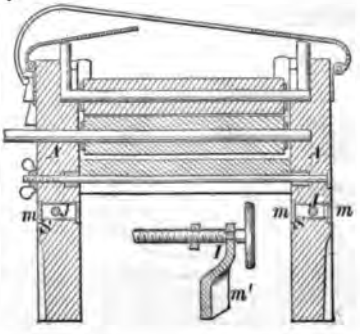

37006

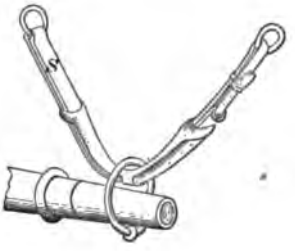

37009

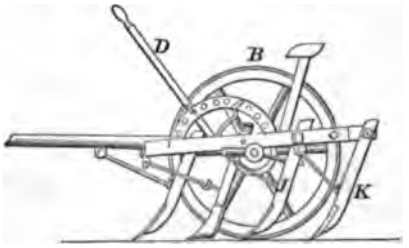

37010

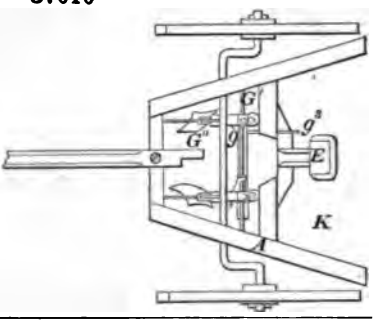

37011.

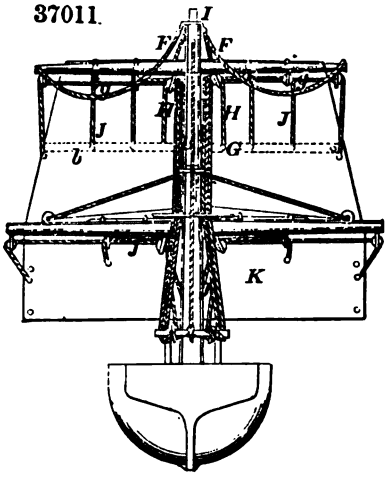

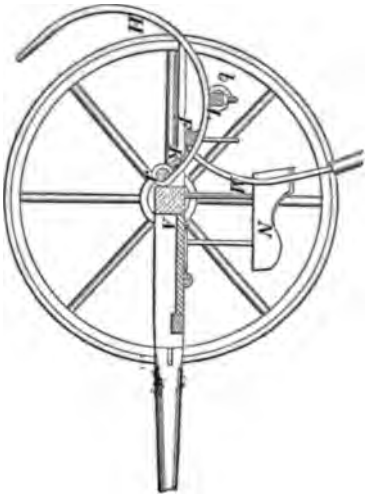

37014

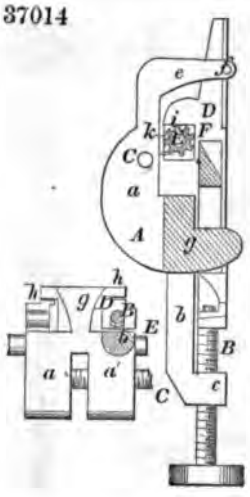

37013

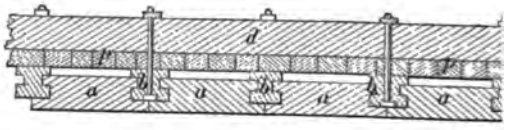

37015

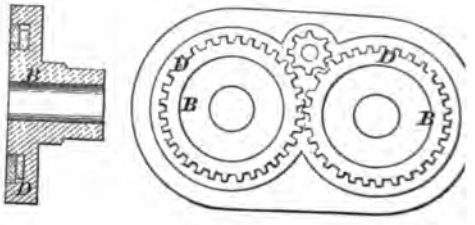

37017

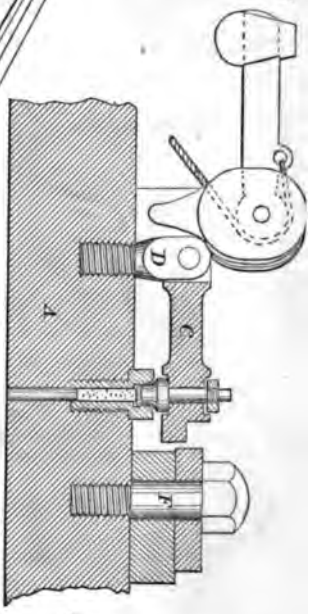

37019

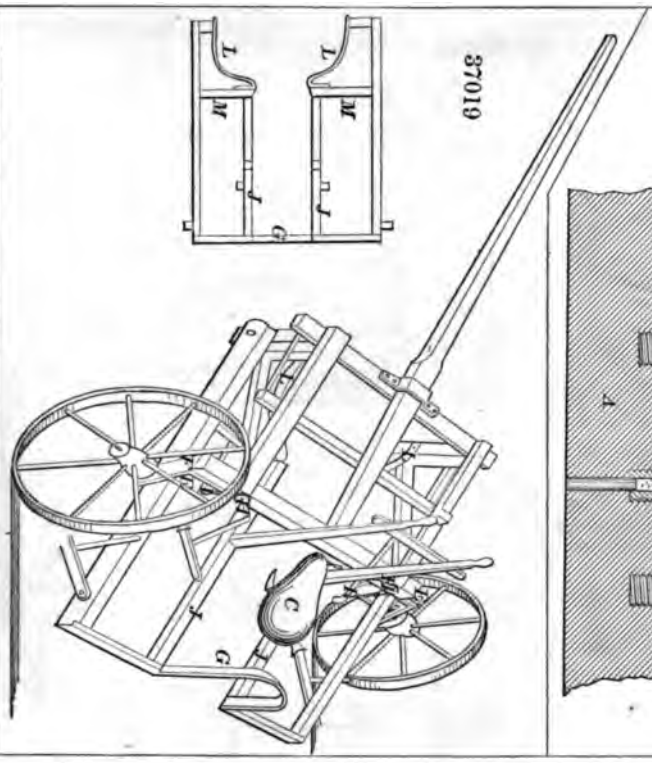

37020

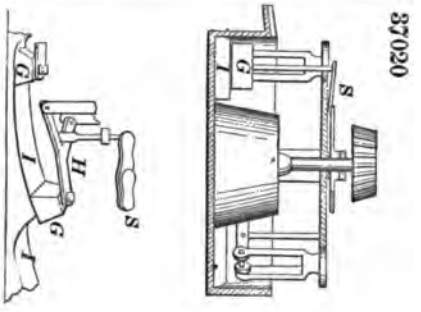

37016

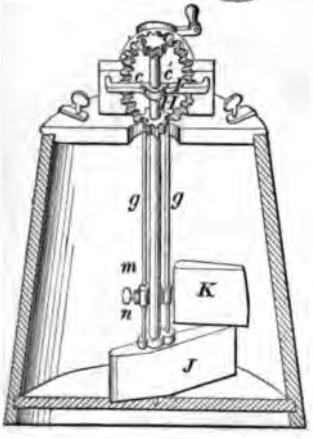

37021

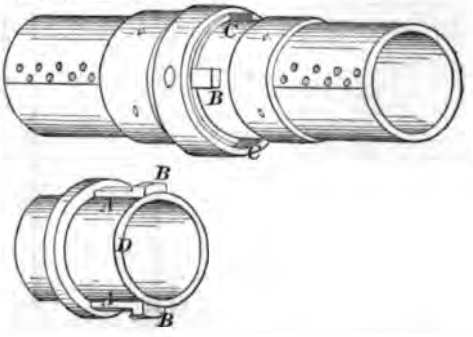

37022

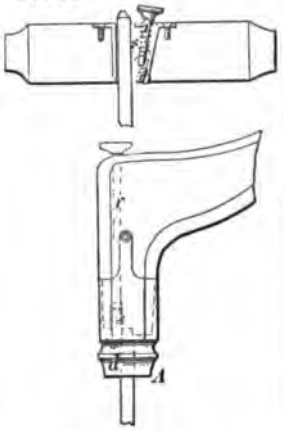

37023

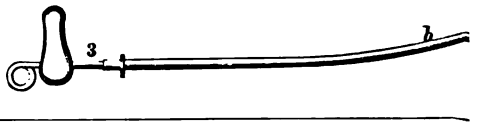

37024

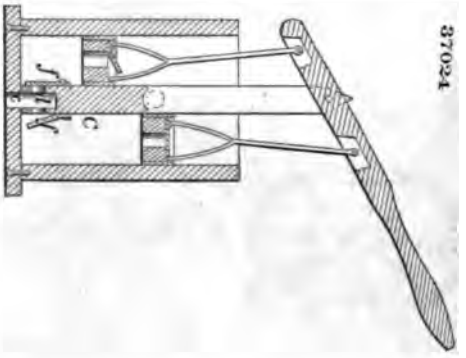

37025

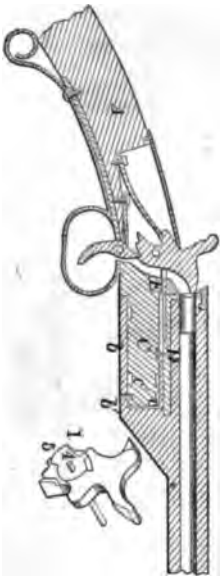

37026

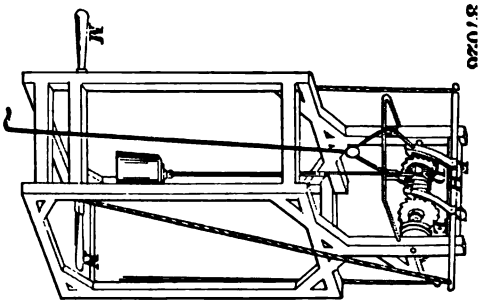

37027

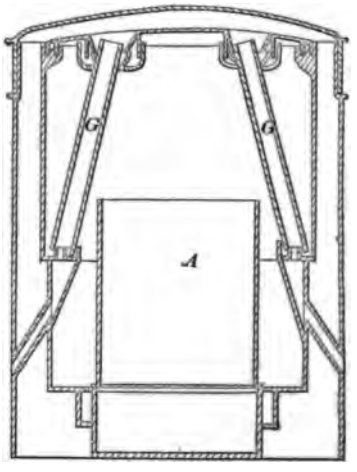

37028

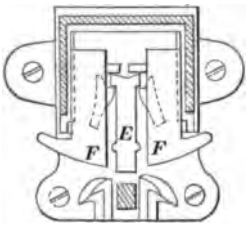

7029

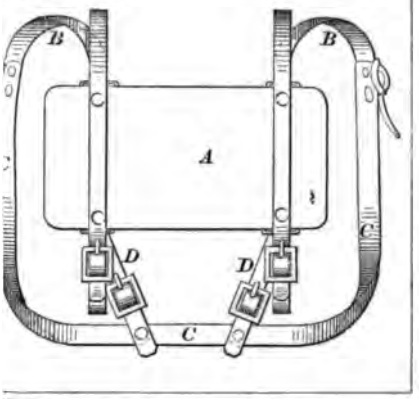

37034

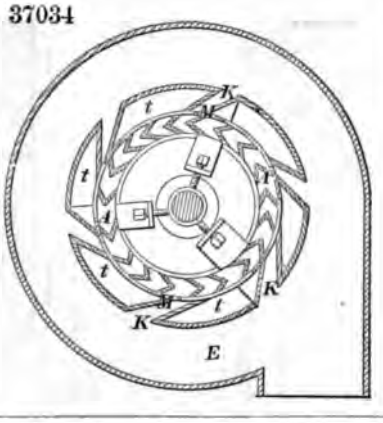

031

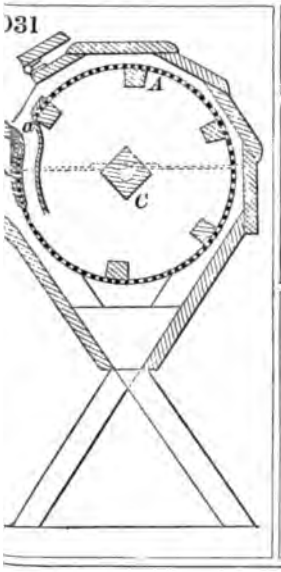

37030

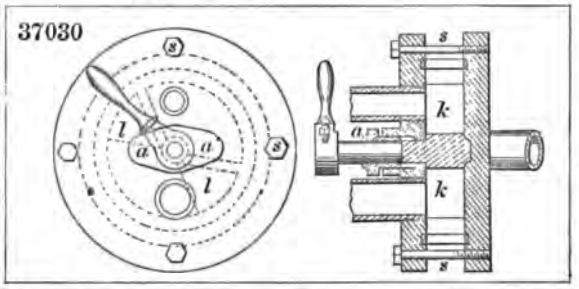

37032

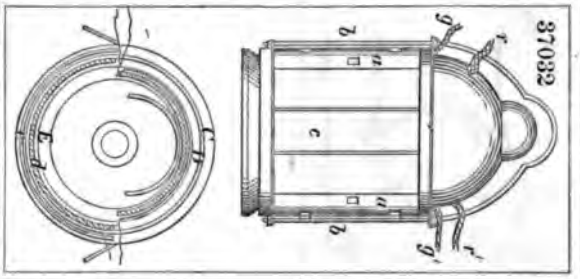

37033

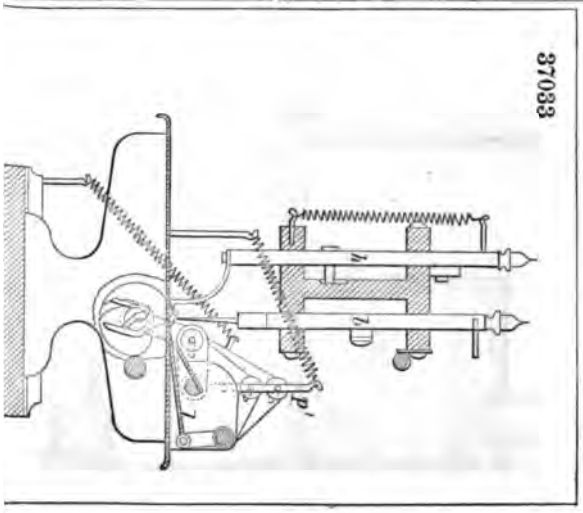

37035

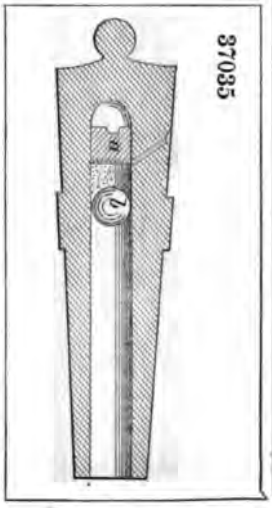

37037

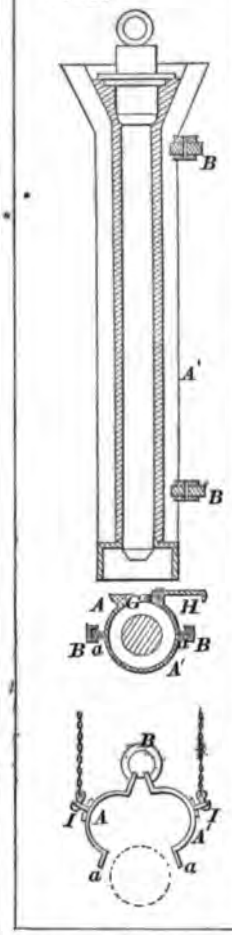

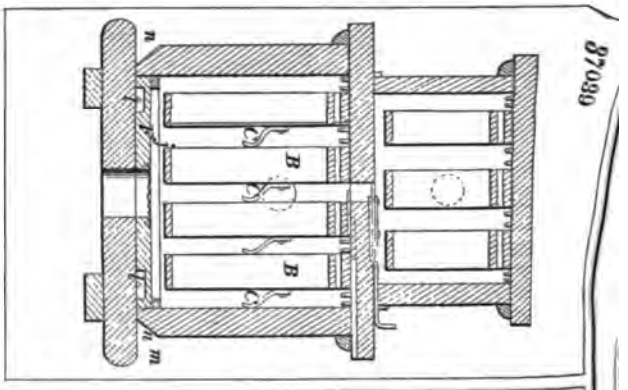

37039

37041

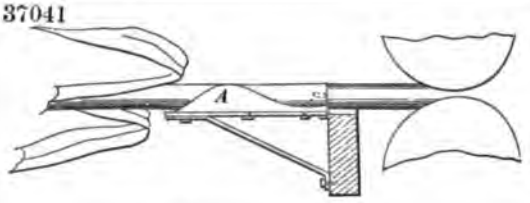

37038

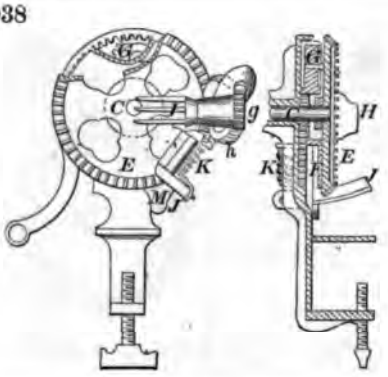

37036

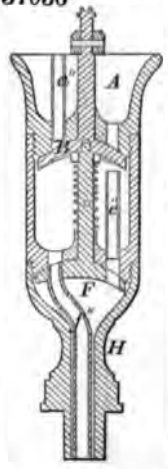

37042

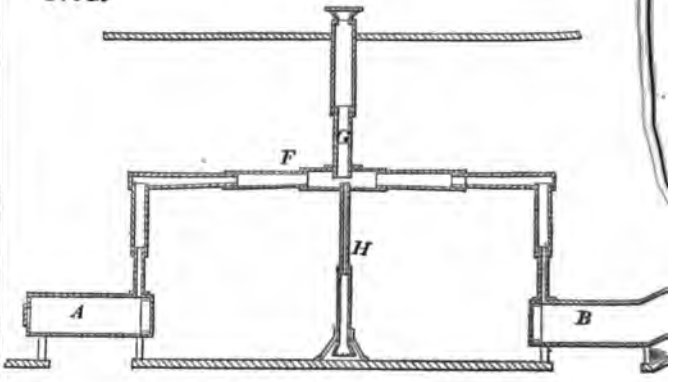

37043

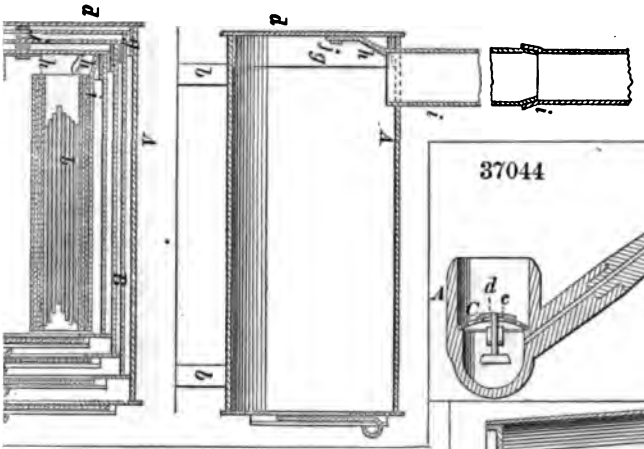

37044

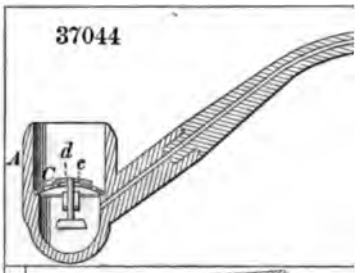

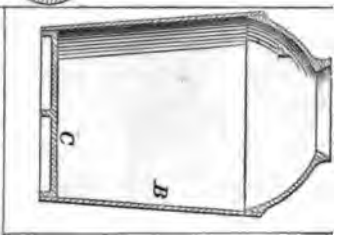

7045

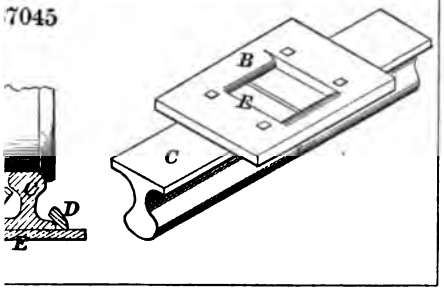

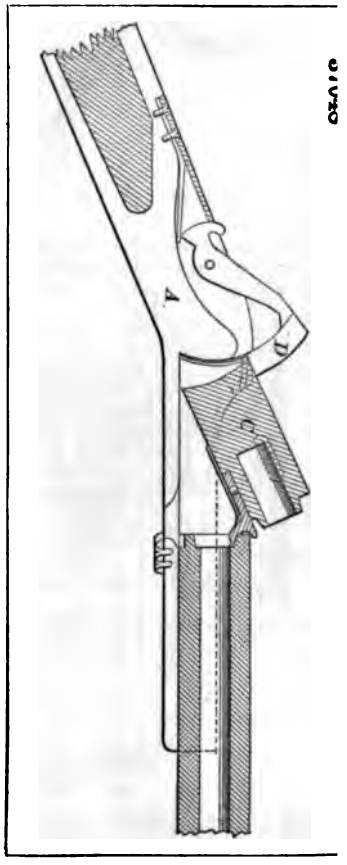

7047

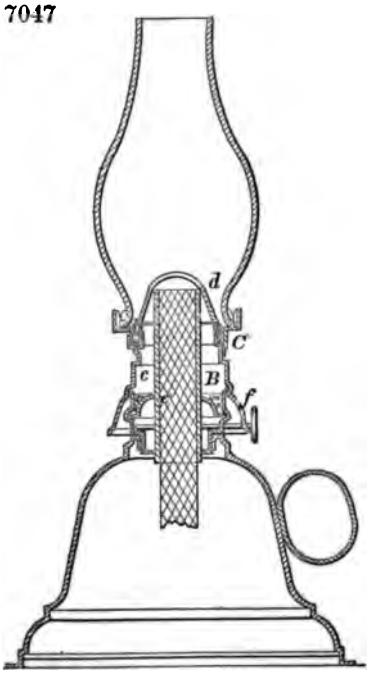

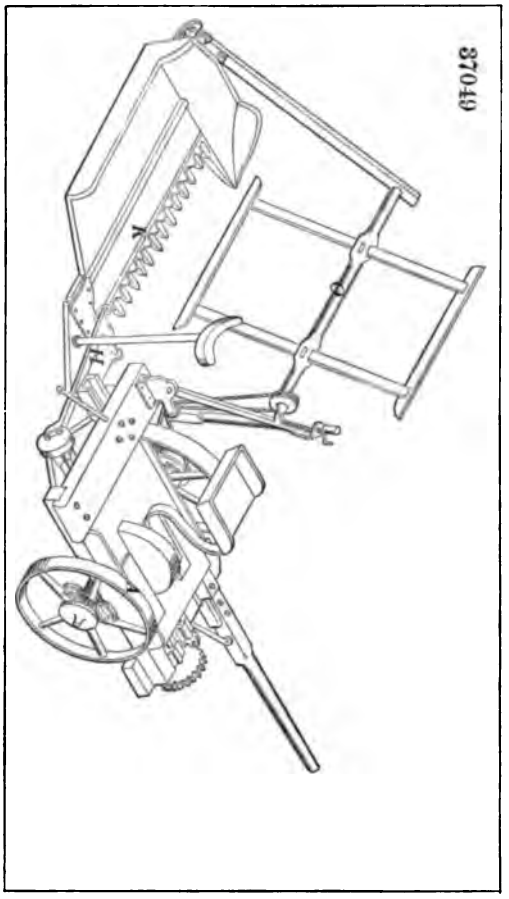
37049

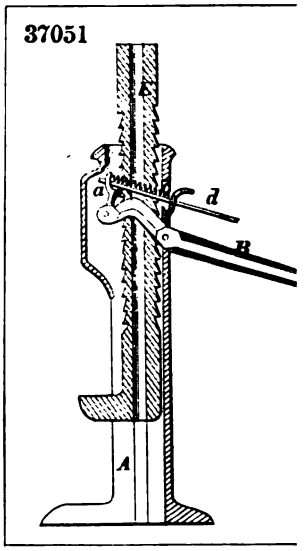
37051
a
d
B
A

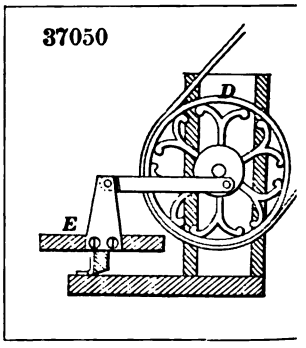
37050
D
E

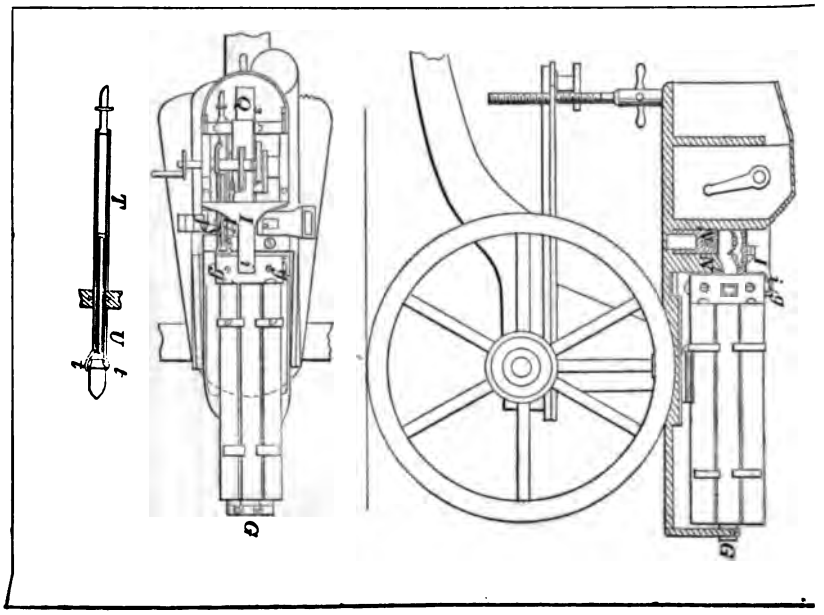
T
U
f
G
G

37053

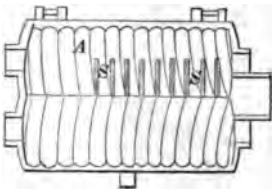

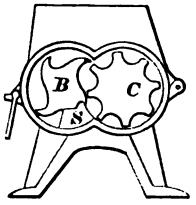

37054

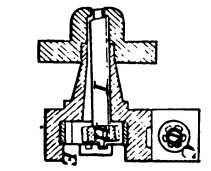

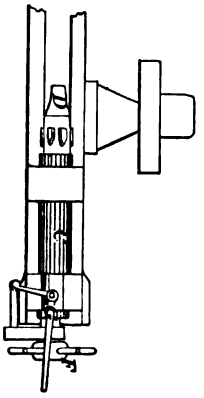

37055

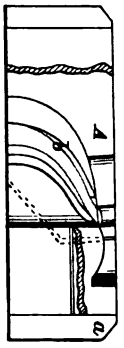

37056

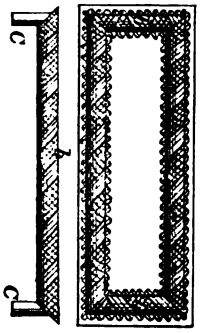

37057

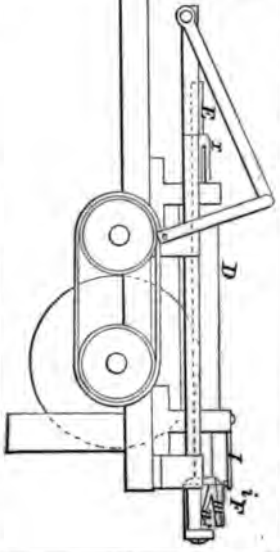

37058

37059

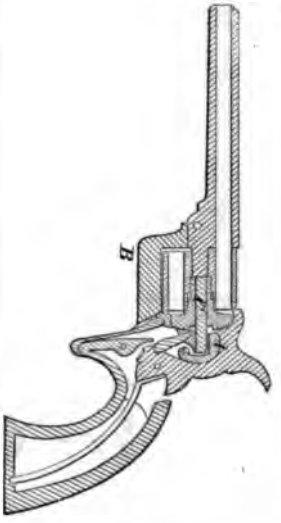

37060

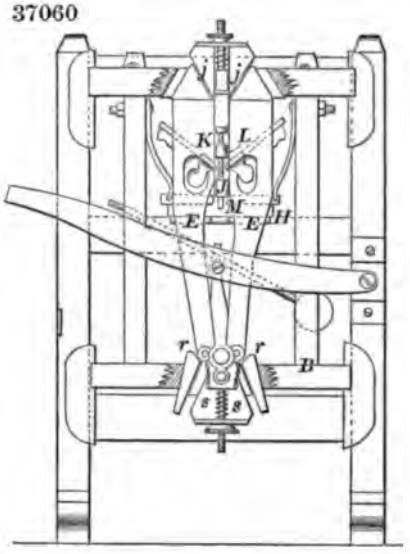

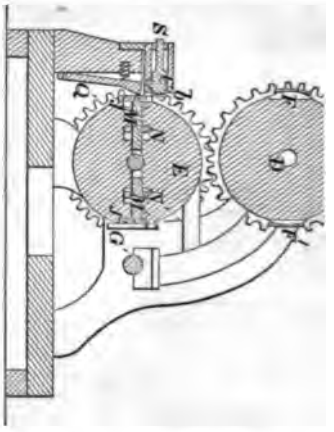

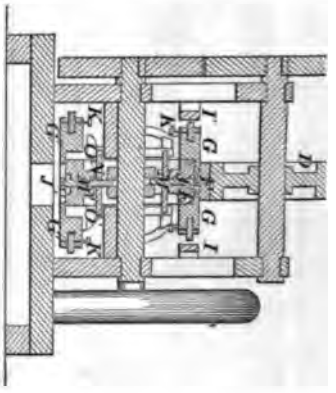

37061

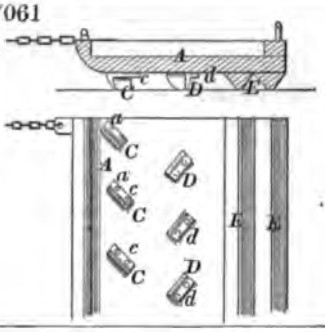

37064

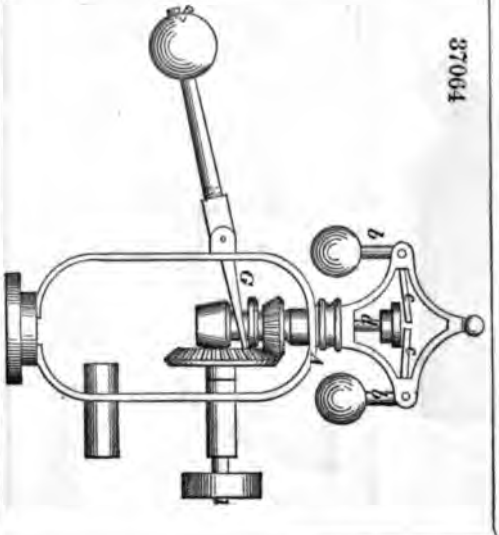

37063

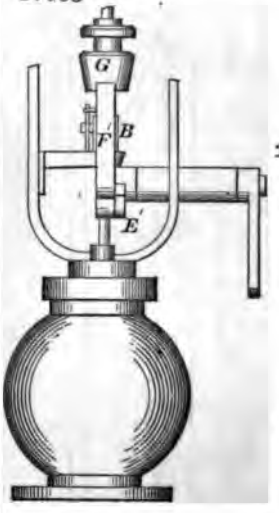

37067

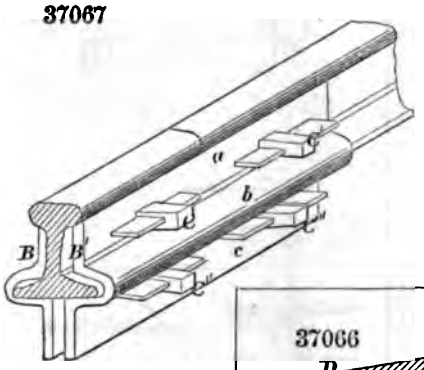

37065

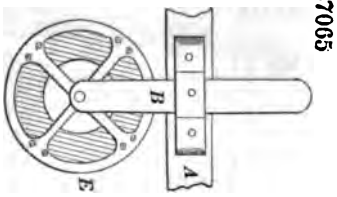

37066

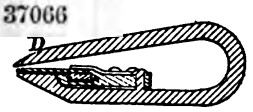

37068

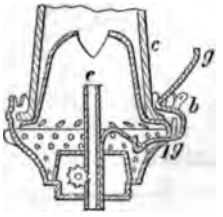

37069

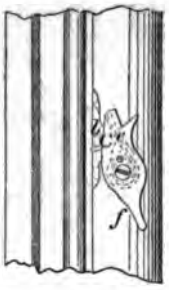

37070

37071

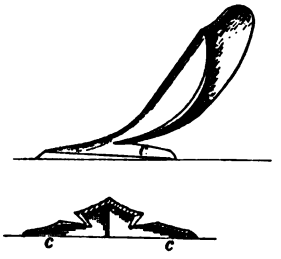

37072

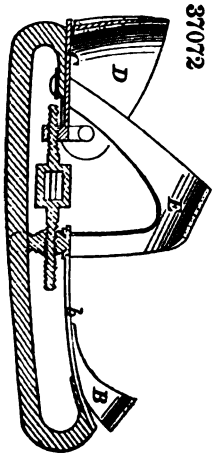

37073

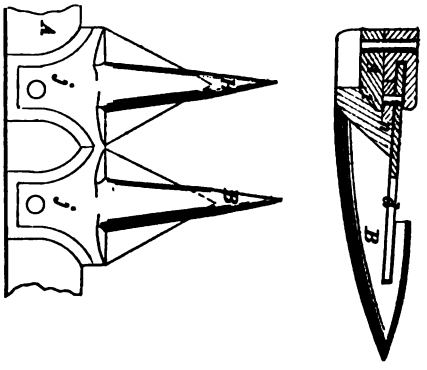

37074

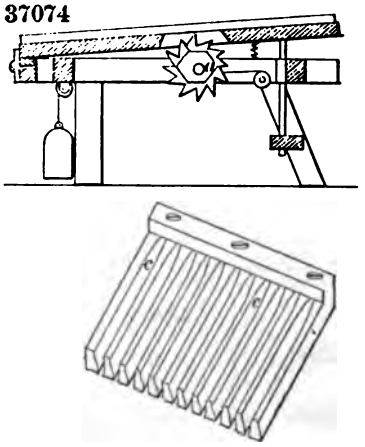

37079

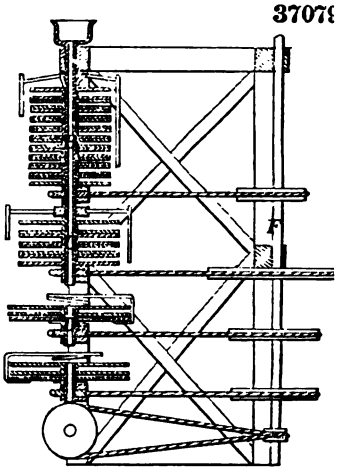

37076

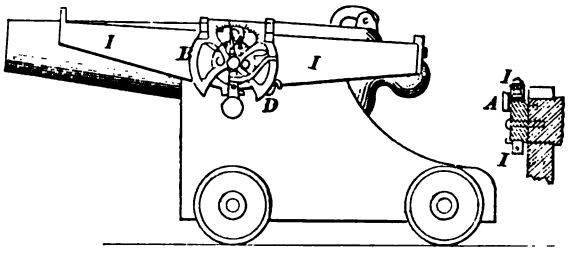

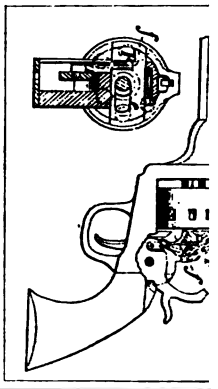

37077

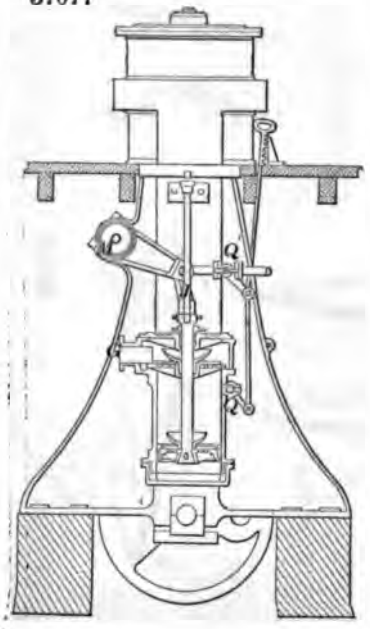

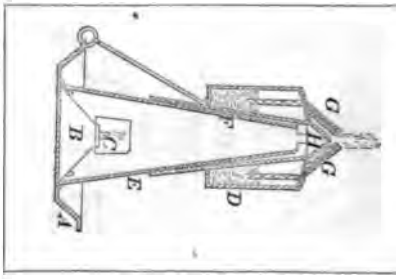

37081

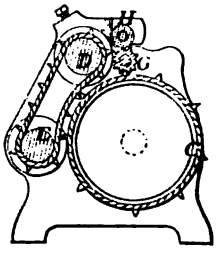

37082

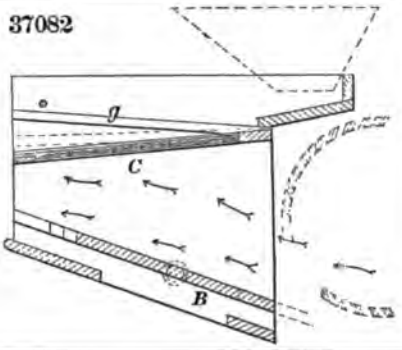

37083

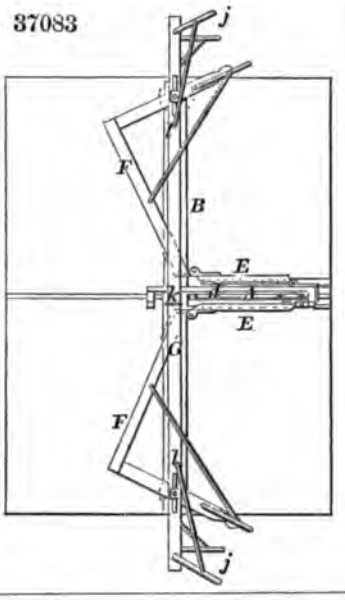

37084

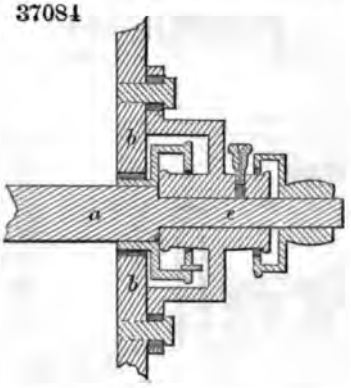

37087

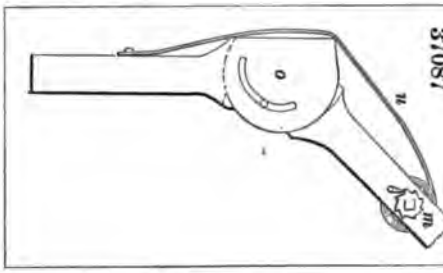

37088

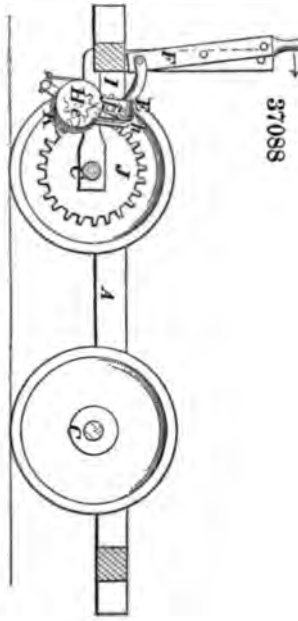

37086

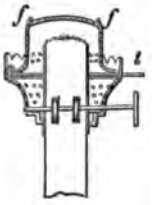

37085

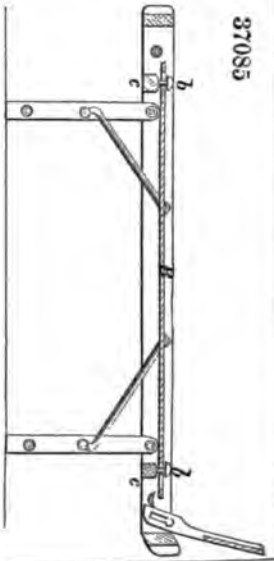

37089

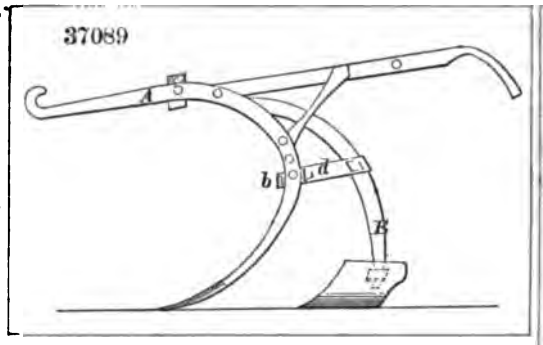

37090

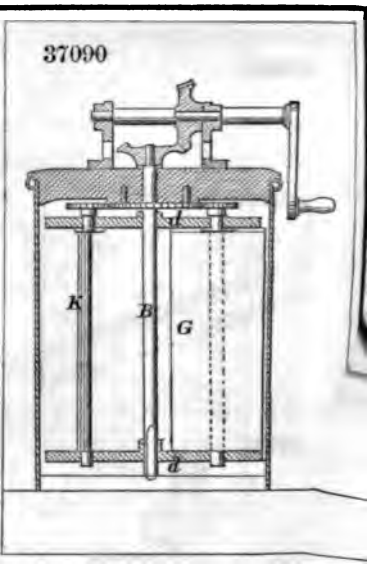

37091

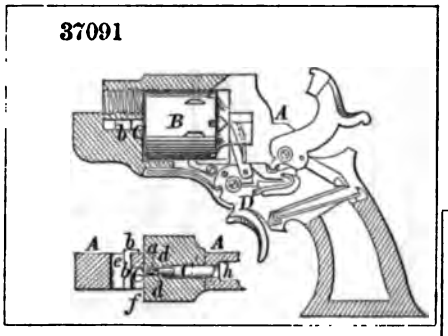

37094

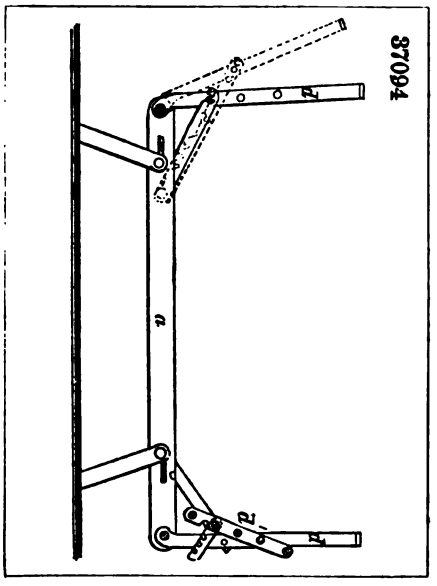

37092

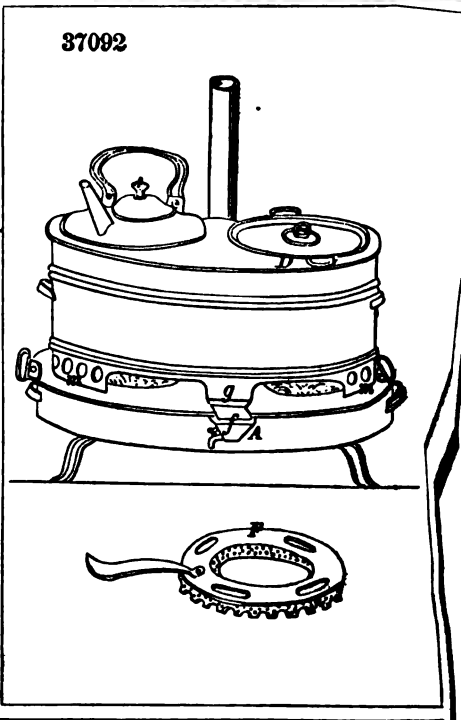

37093

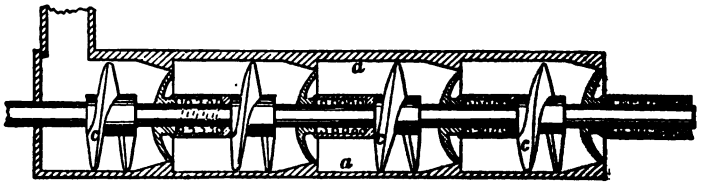

37095

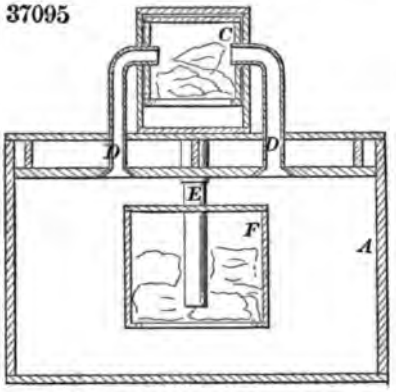

37096

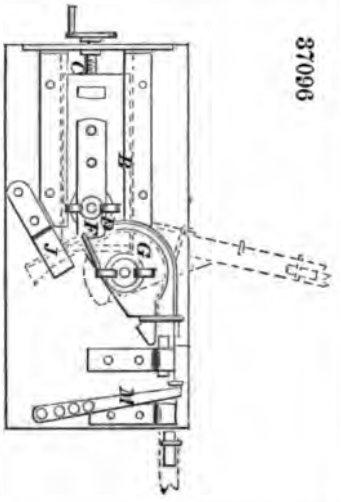

37097

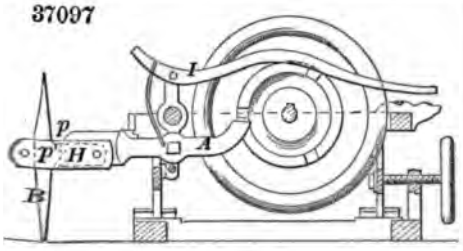

37098

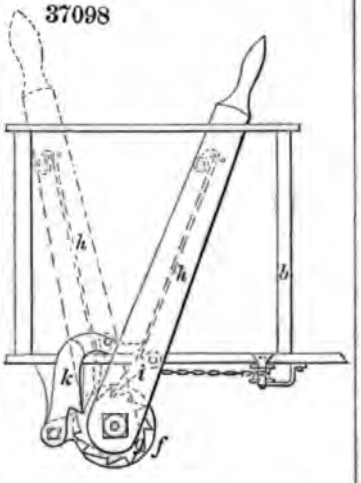

37099

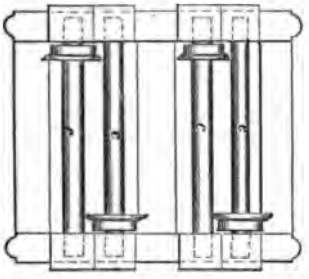

37100

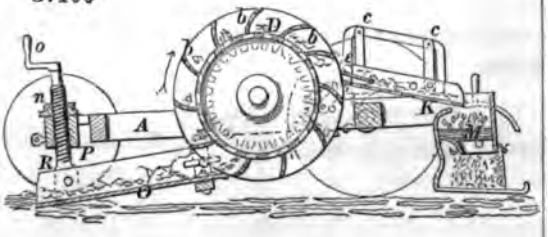

37101

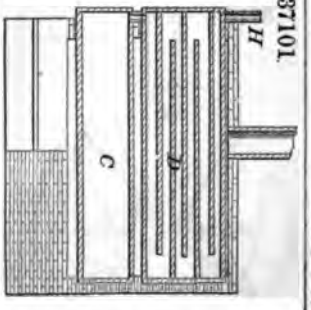

37037

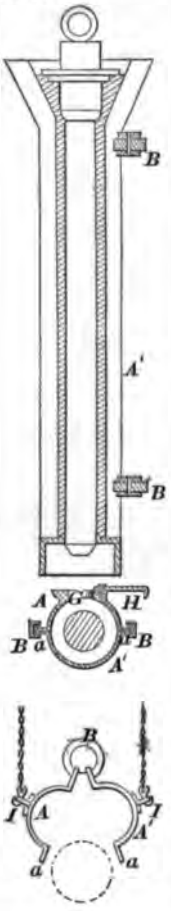

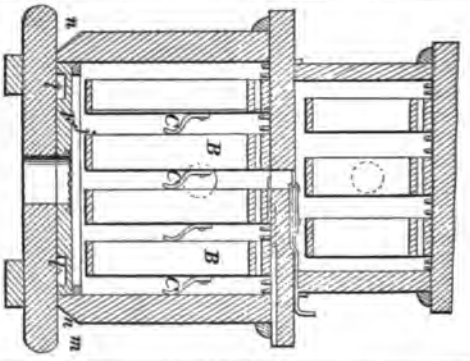

37041

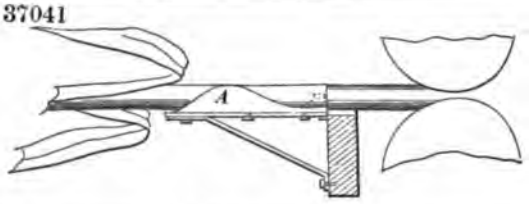

37038

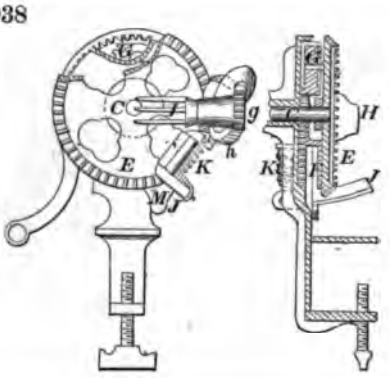

37036

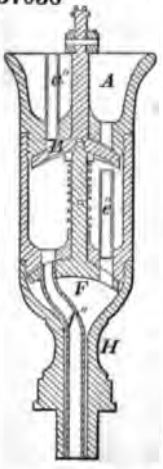

37042

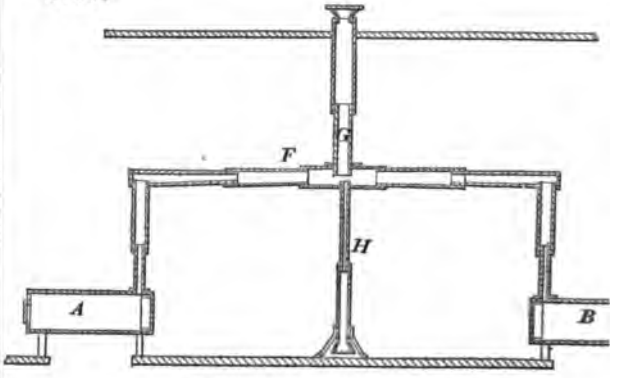

37043

37044

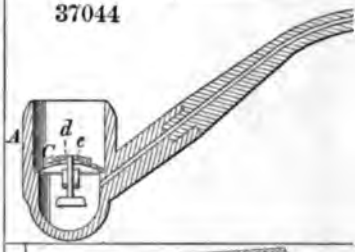

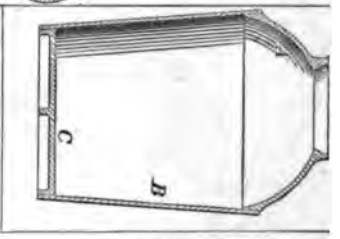

37045

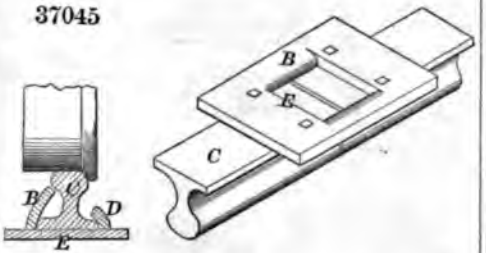

37046

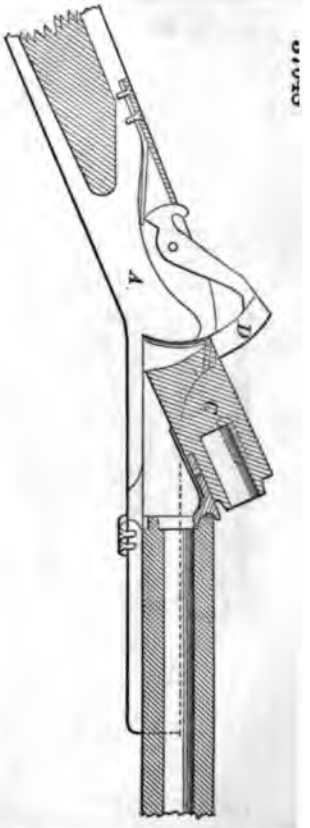

37047

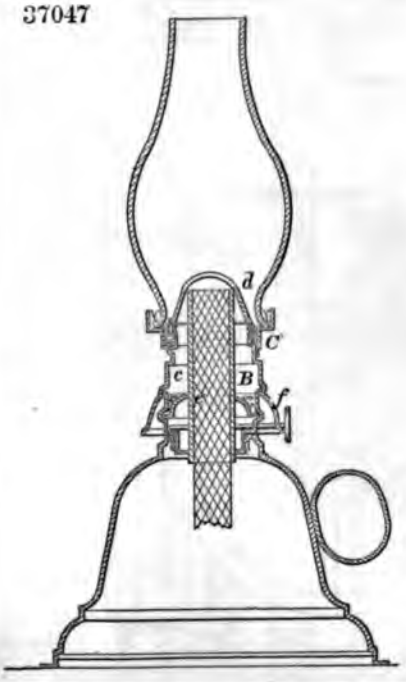

37049

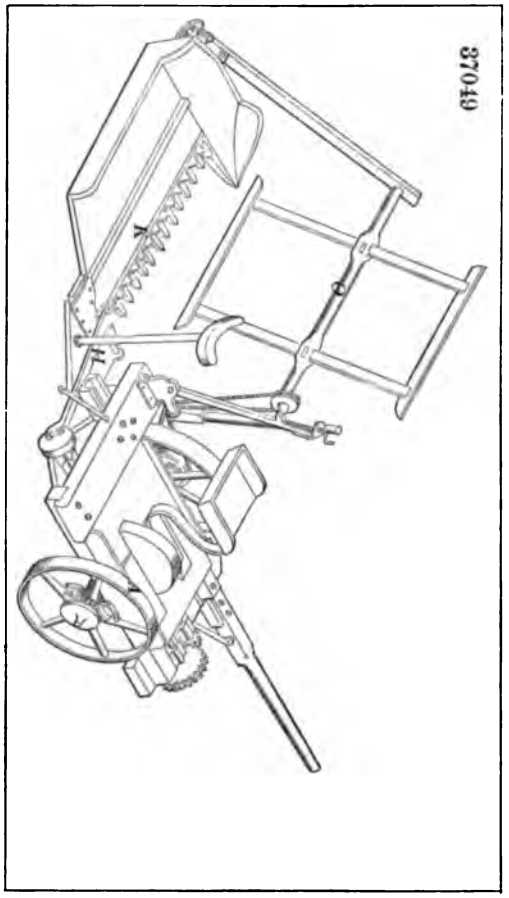

37051

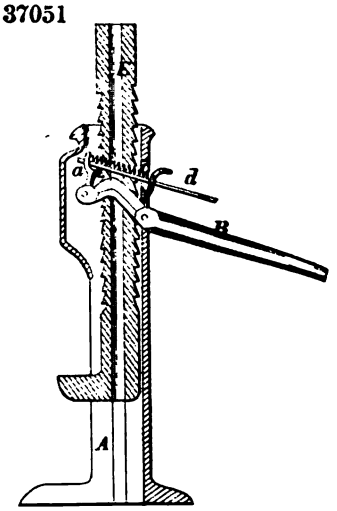

37050

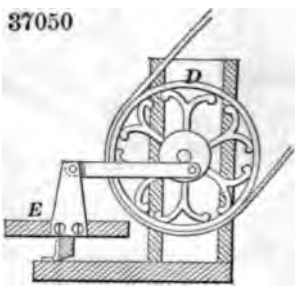

37052

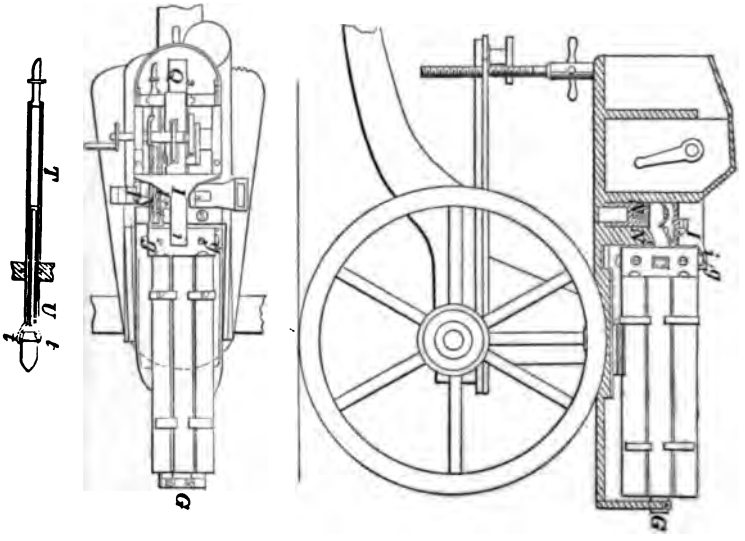

37053

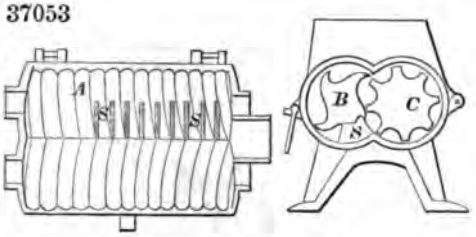

37054

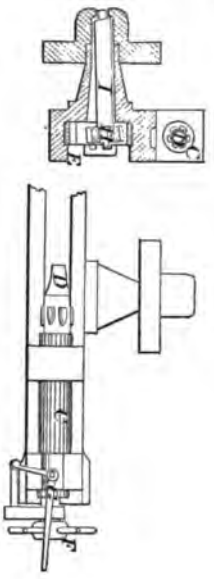

37056

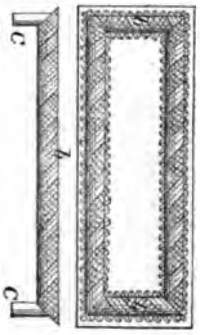

37055

37057

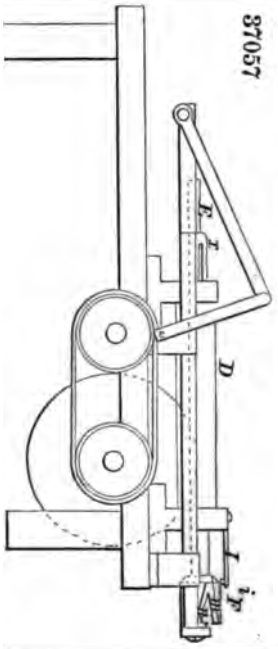

37058

37059

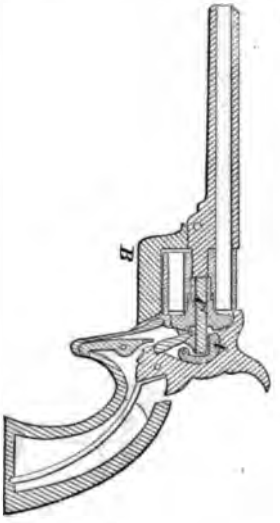

37060

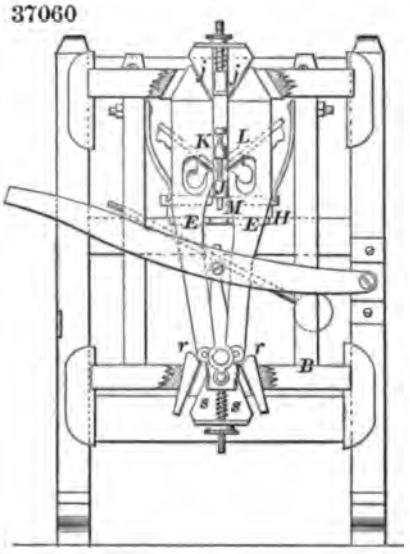

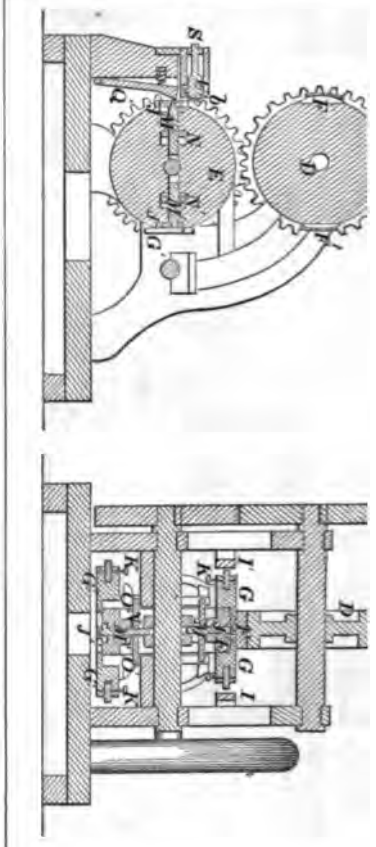

37061

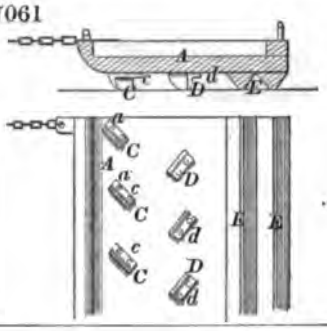

37064

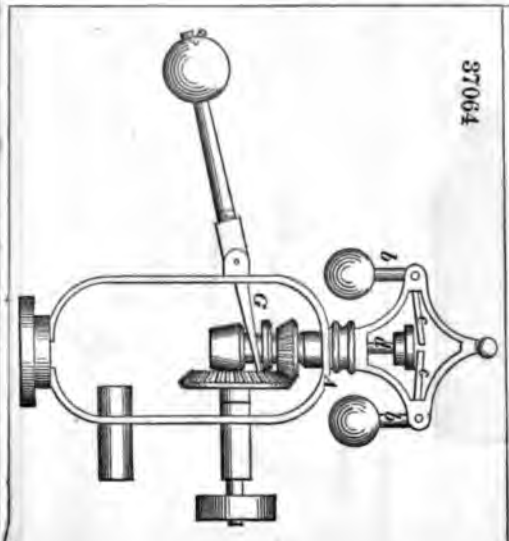

37063

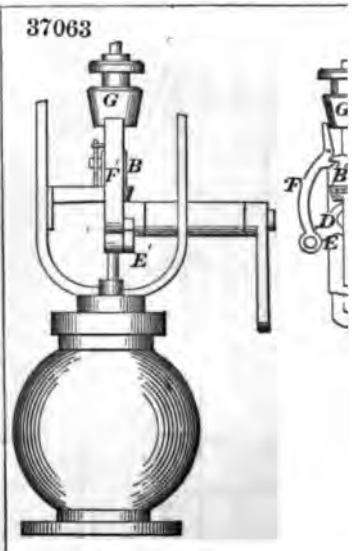

37067

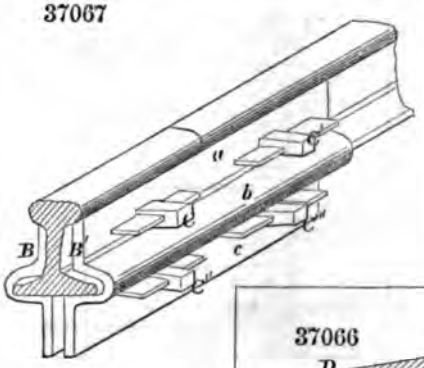

37065

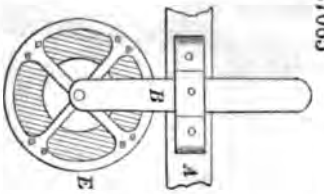

37066

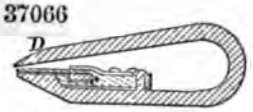

37068

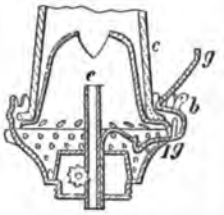

37069

37070

37071

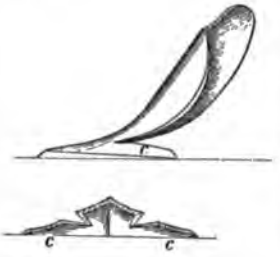

37072

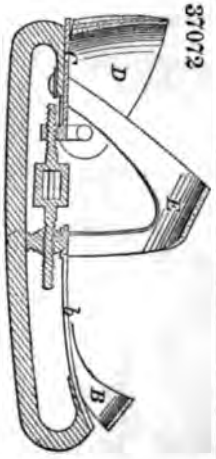

37073

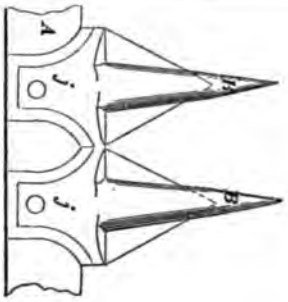

37074

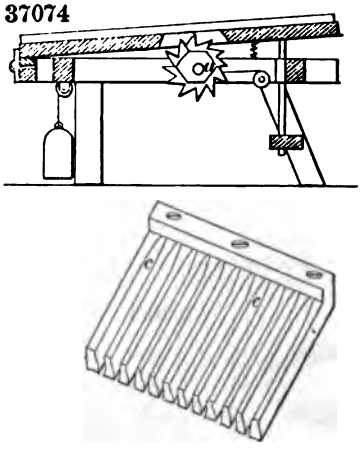

37079

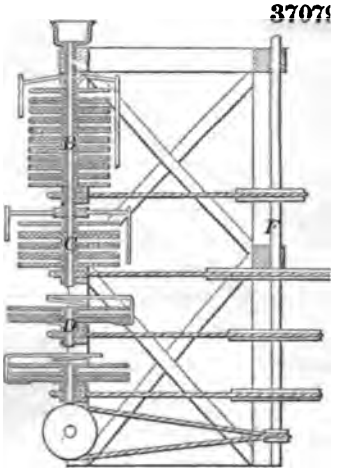

37076

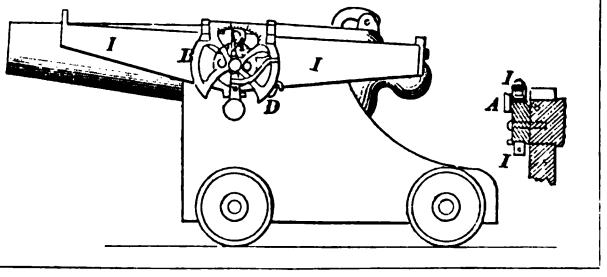

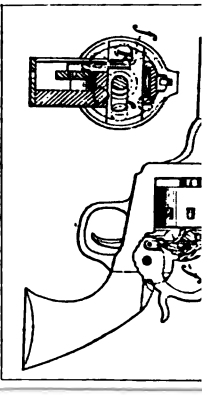

37077

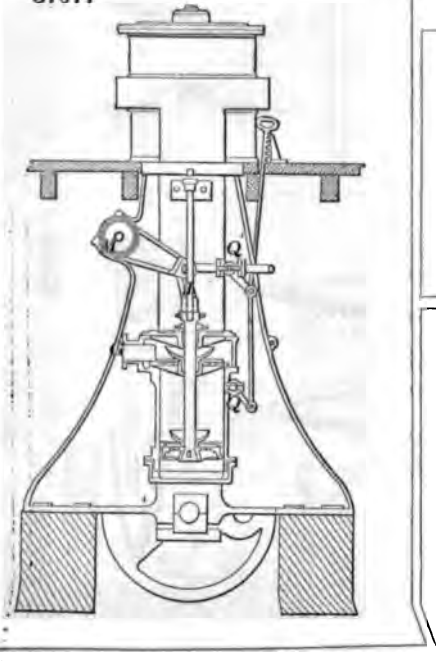

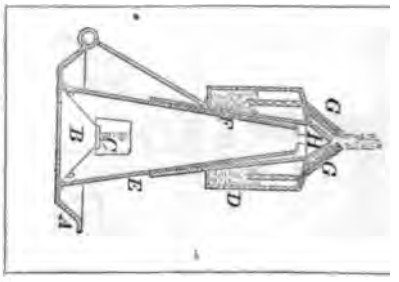

37081

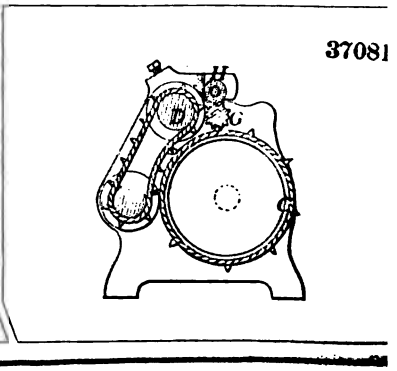

37082

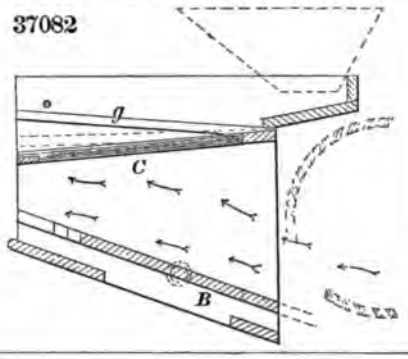

37083

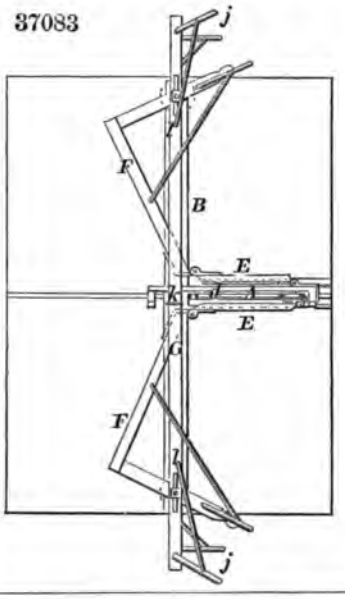

37084

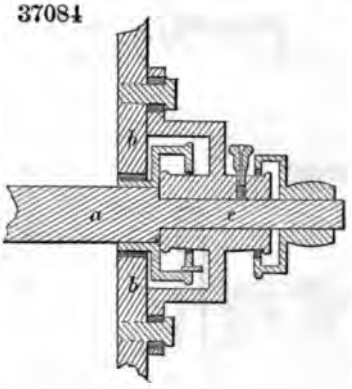

37087

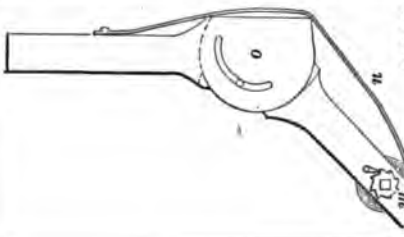

37088

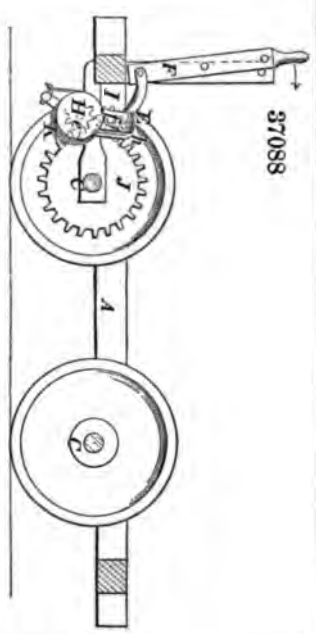

37086

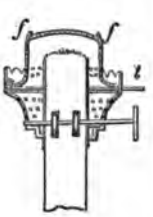

37085

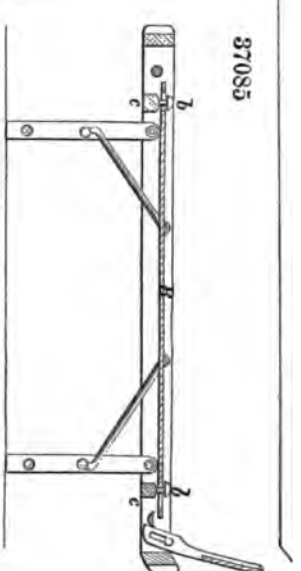

37089

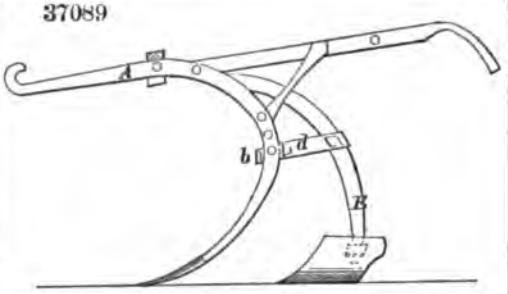

37090

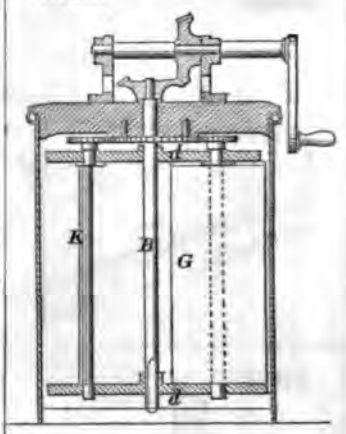

37091

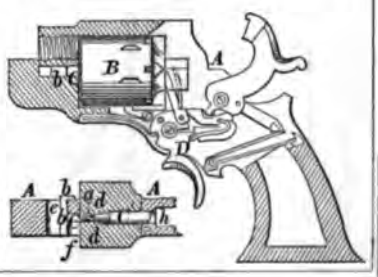

37094

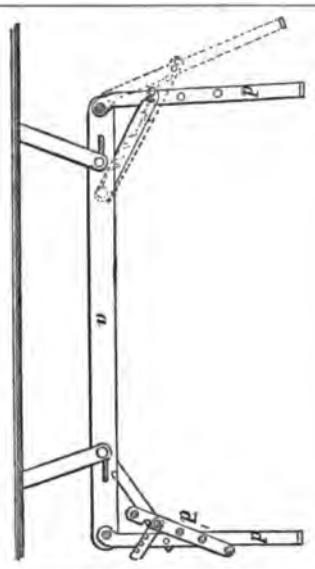

37092

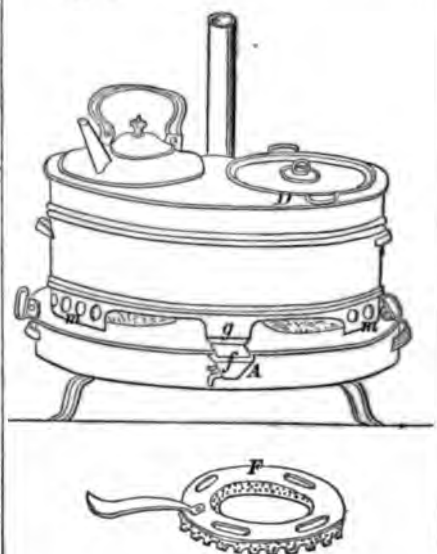

37093

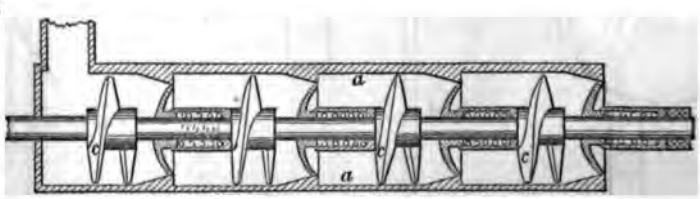

37095

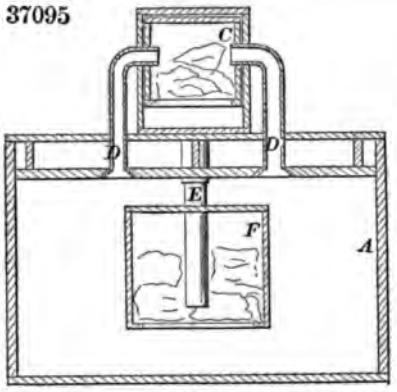

37096

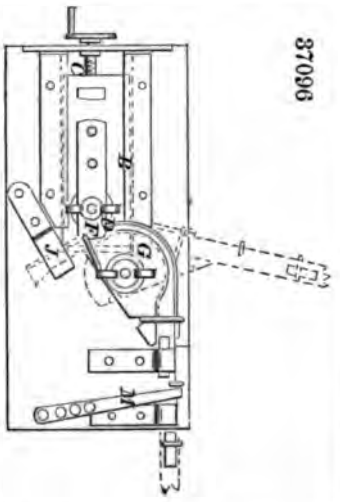

37097

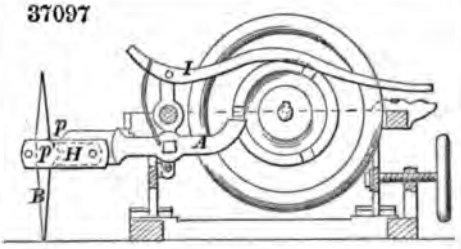

37098

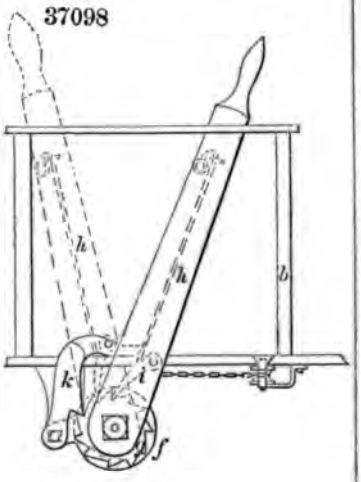

37099

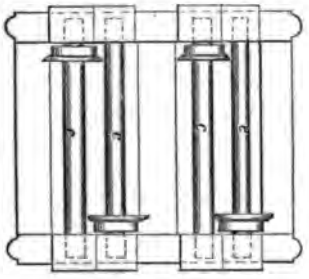

37100

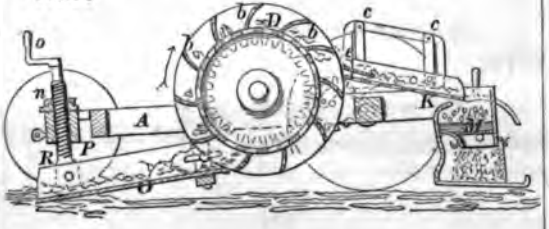

37101

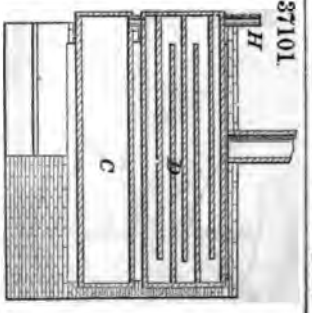

37103

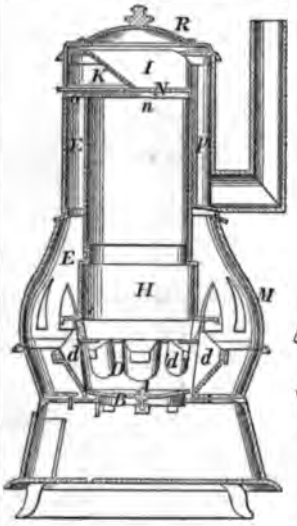

37102

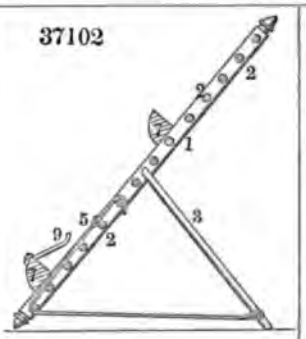

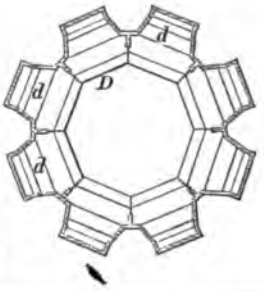

37104

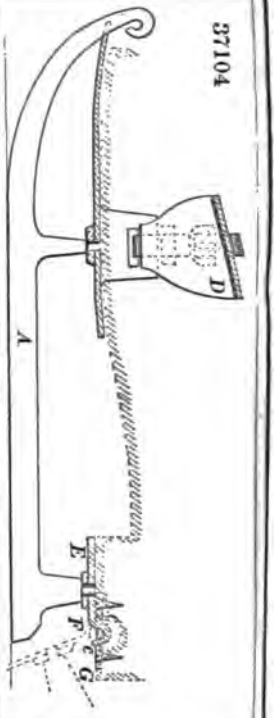

37107

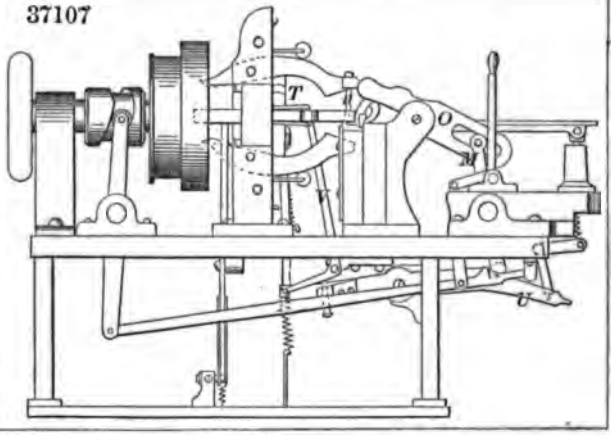

37108

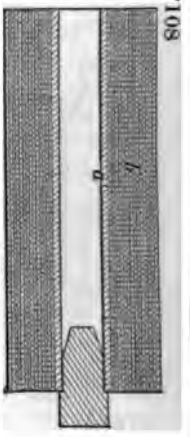

37106

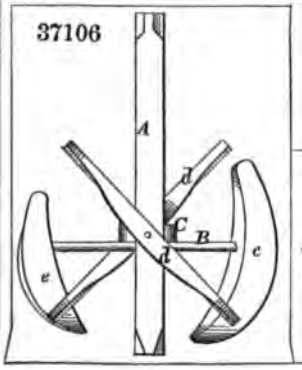

37105

37111

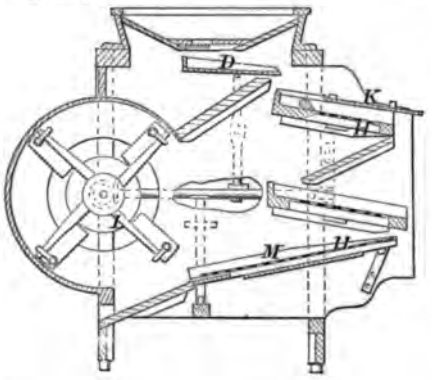

37110

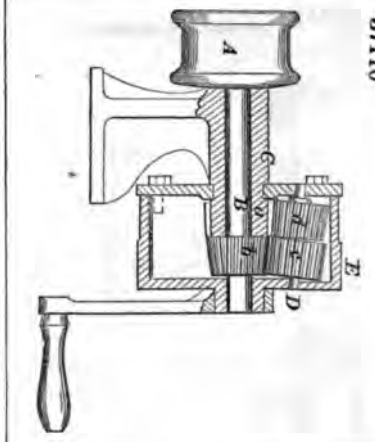

37113

37112

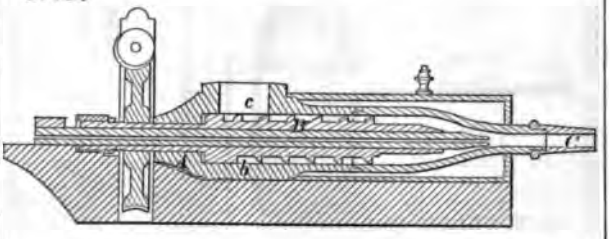

37114

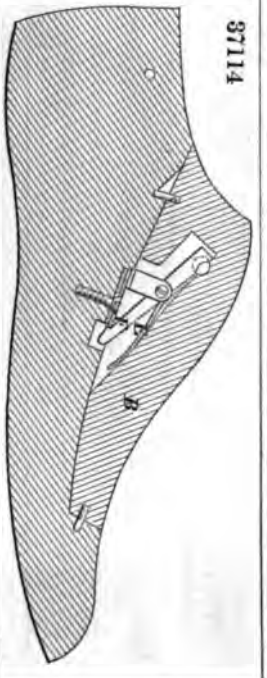

37109

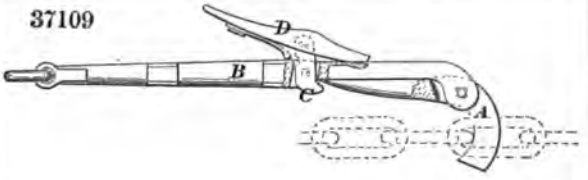

37115

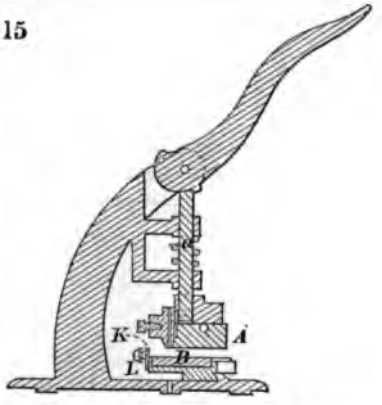

37116

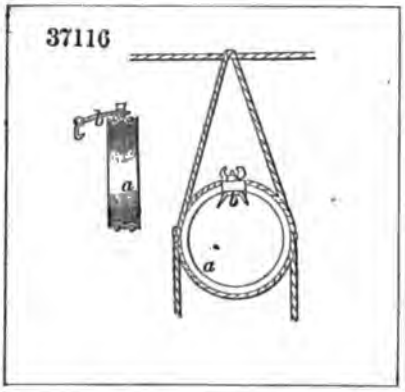

37118

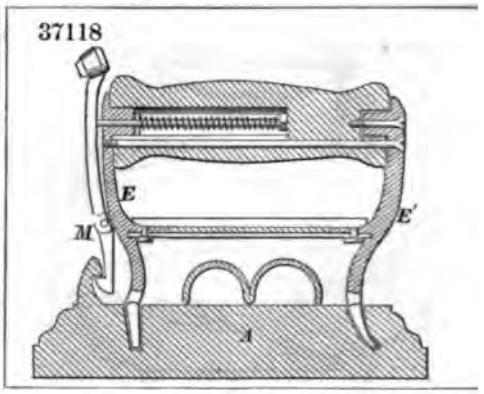

37120

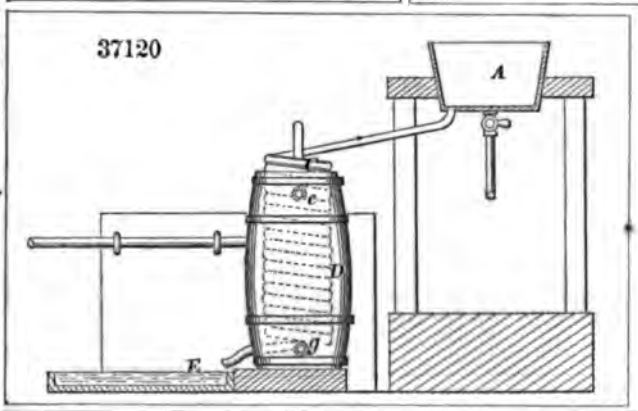

37119

37122

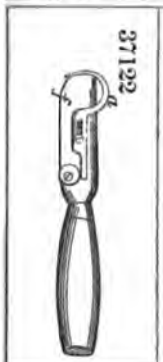

37123

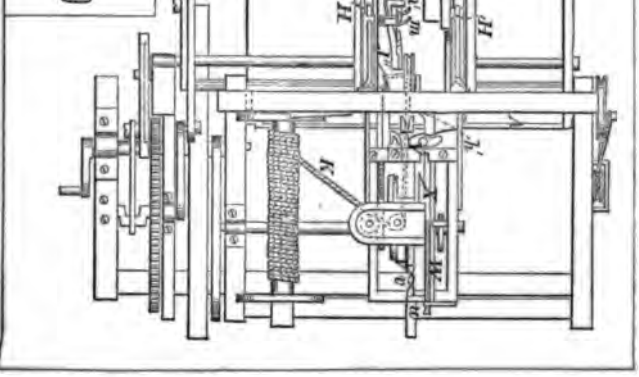

37121

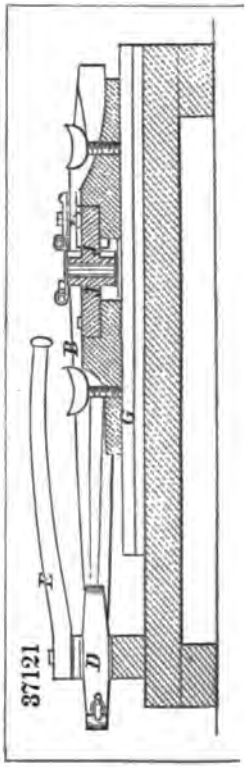

37124

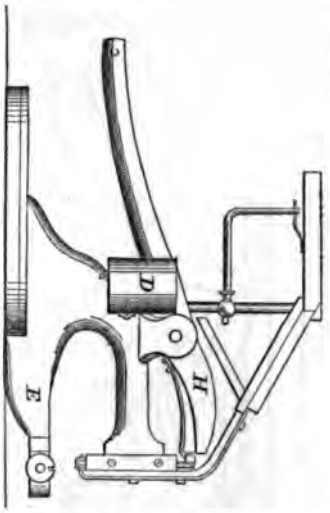

37125

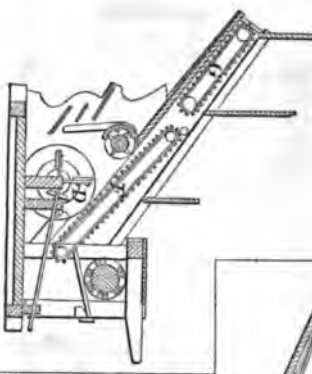

37126

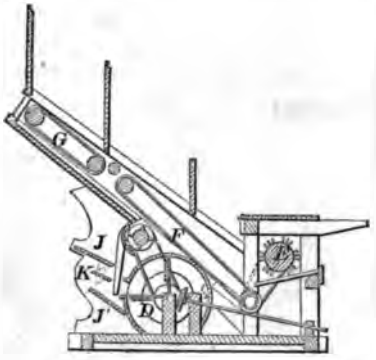

37127

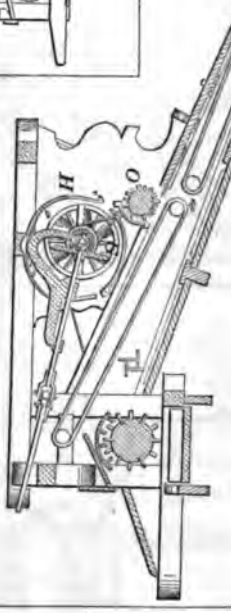

37128

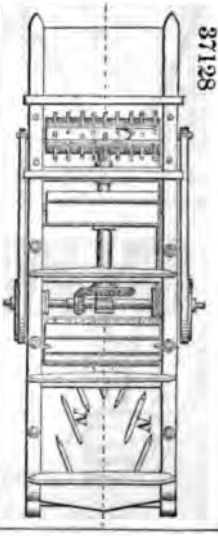

37129

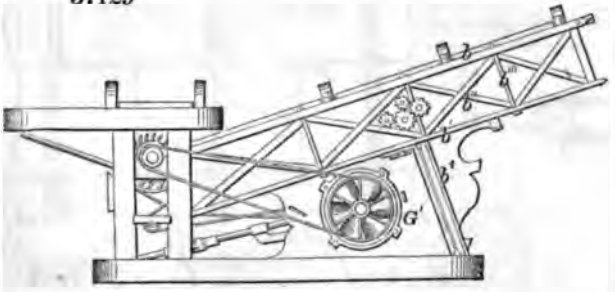

37130

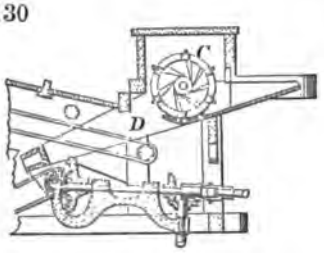

37131

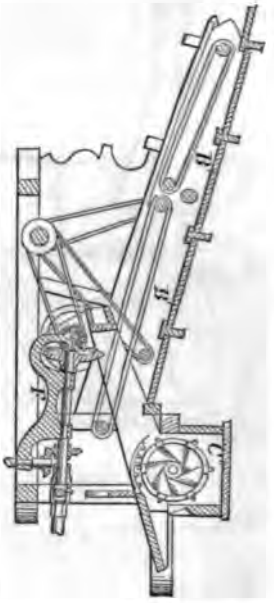

37132

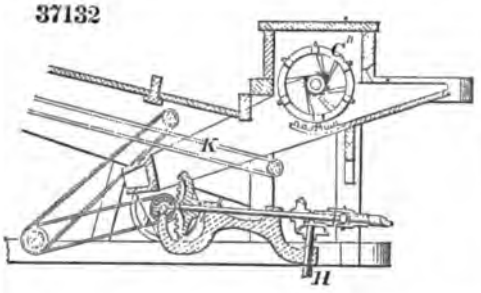

37133

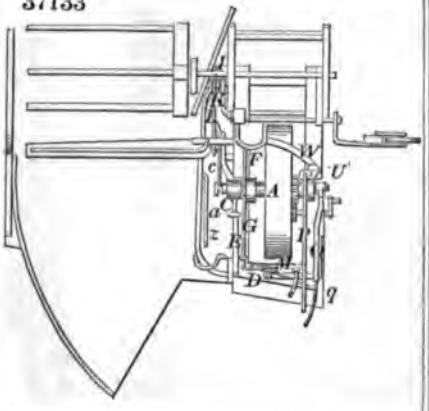

37134

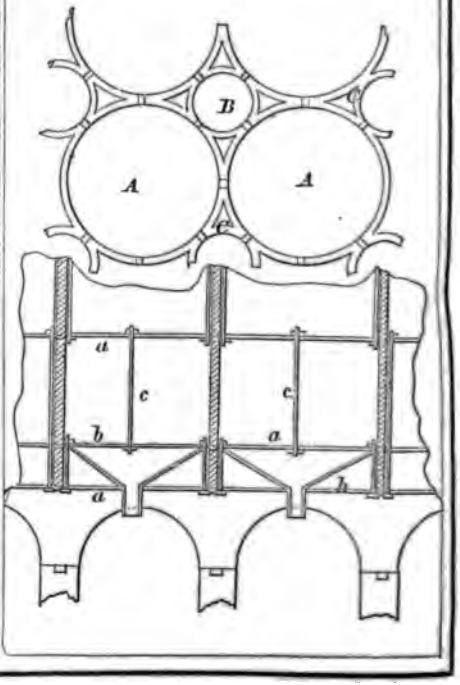

37135

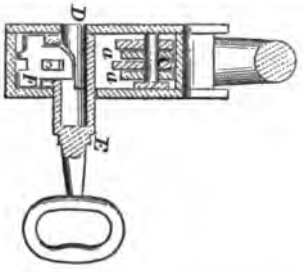

37147

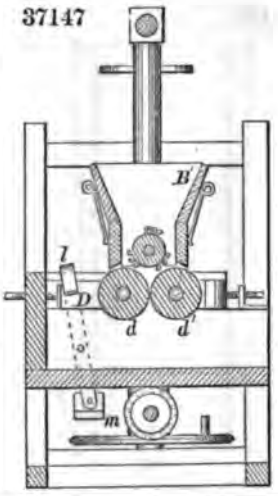

37148

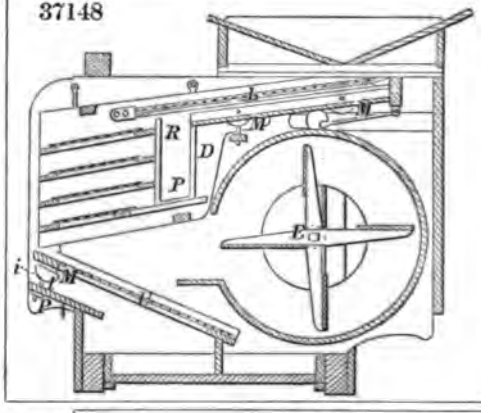

37149

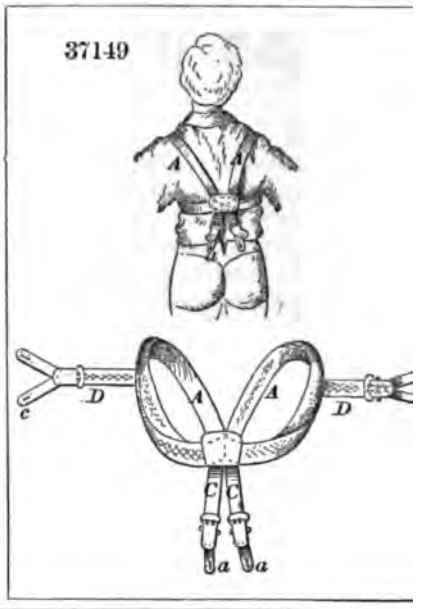

37150

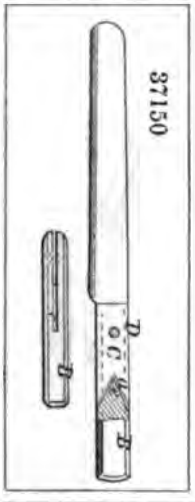

37146

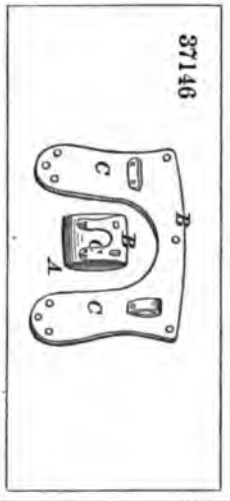

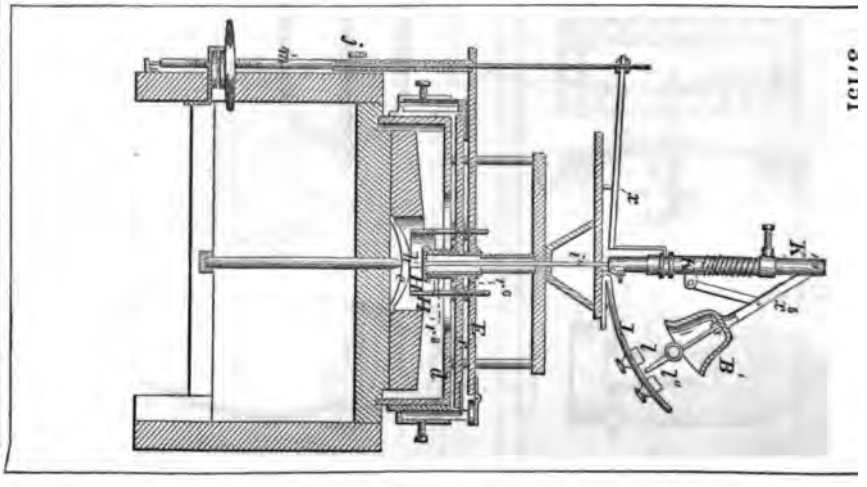

37152

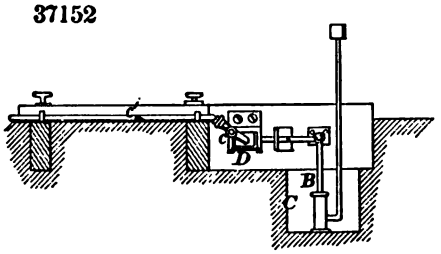

37153

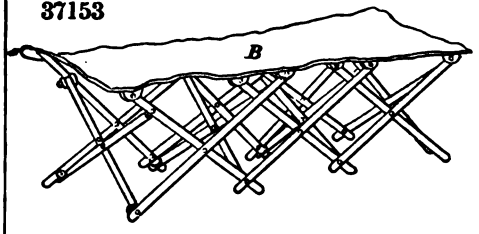

37154

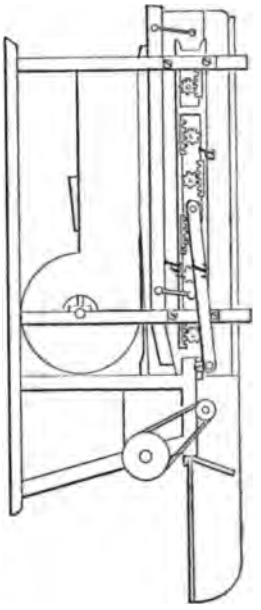

37155

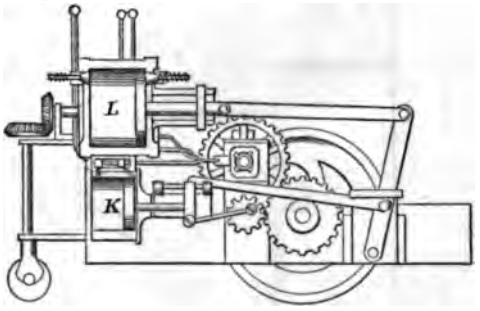

37156

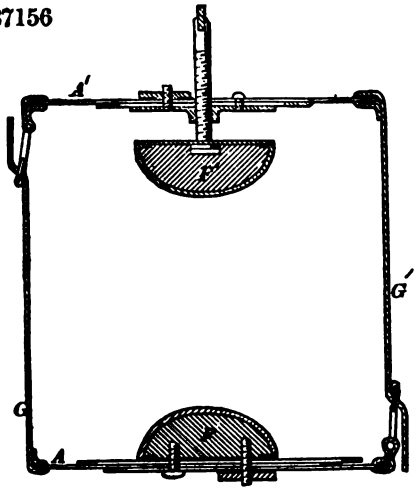

37157

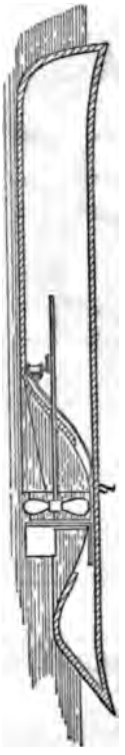

37159

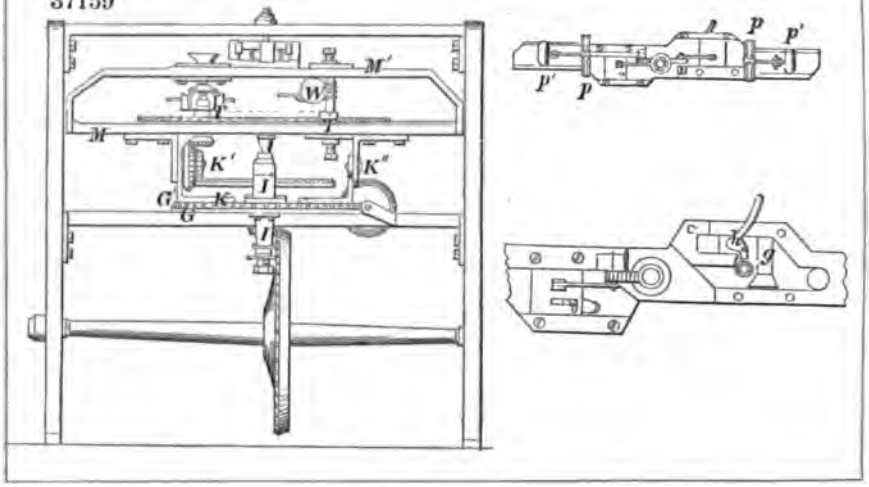

37158

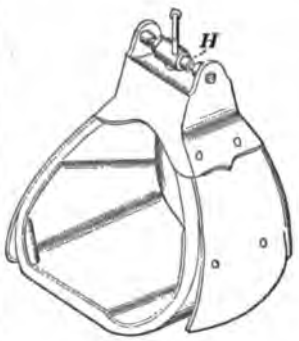

37161

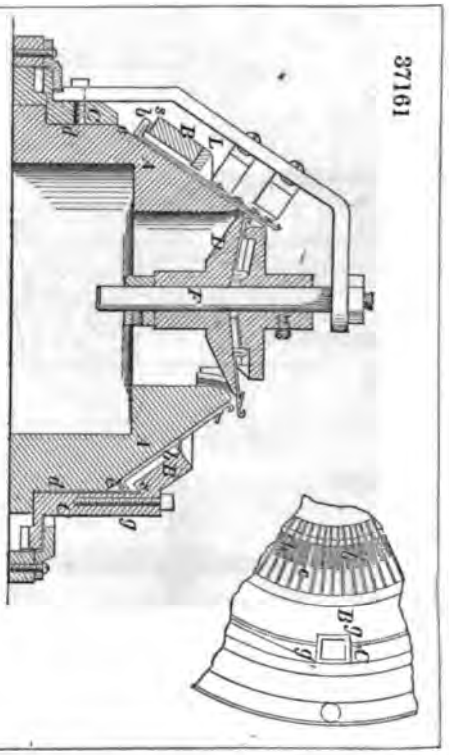

37160

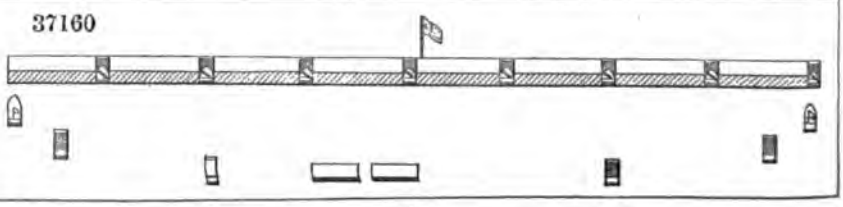

37162

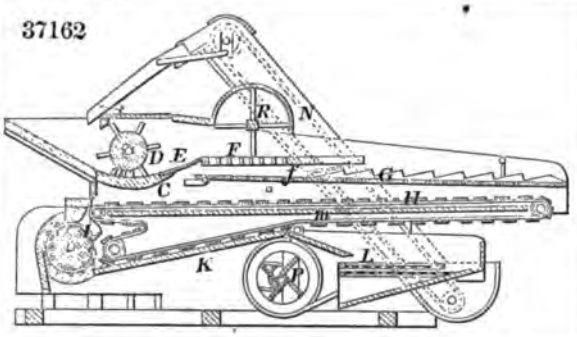

37163

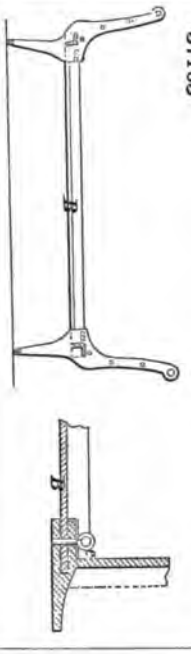

37166

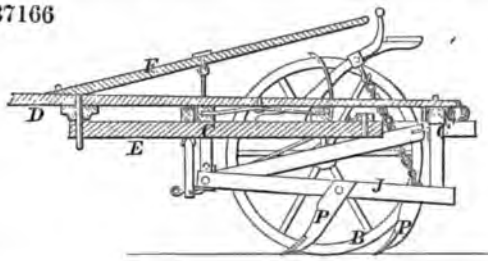

37165

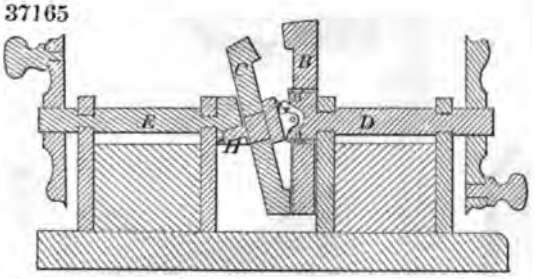

37164

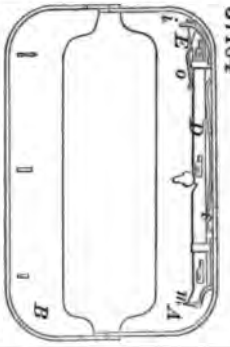

37167

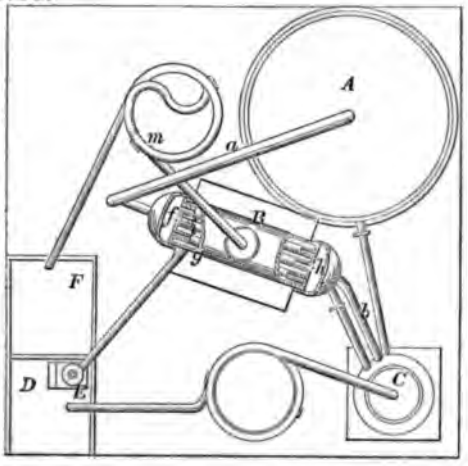

37168

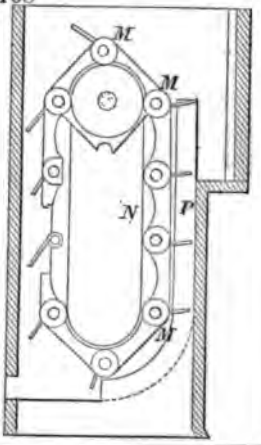

37169

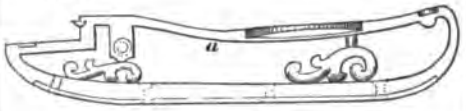

37170

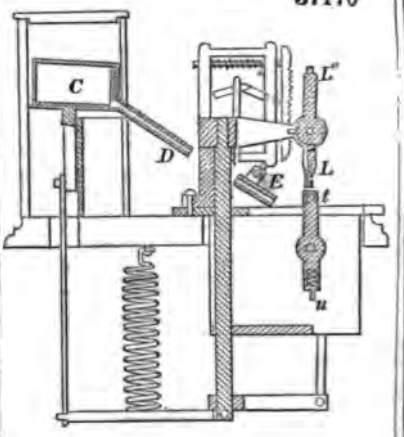

37171

37172

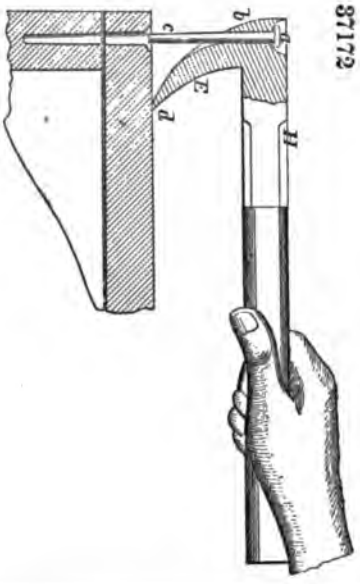

37174

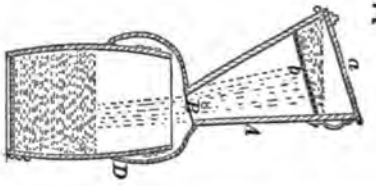

37175

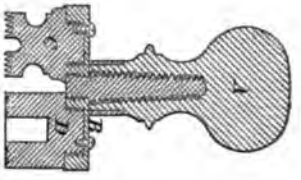

37173

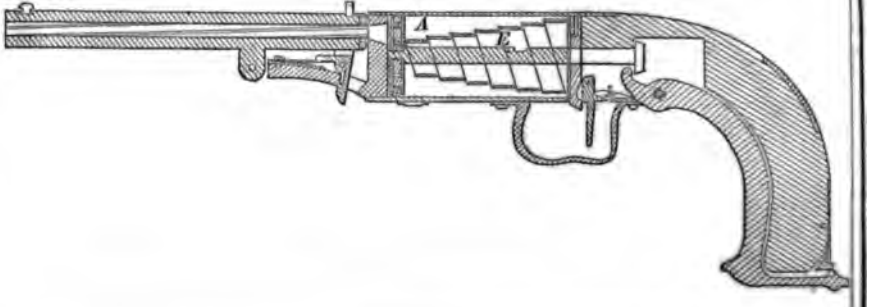

37177

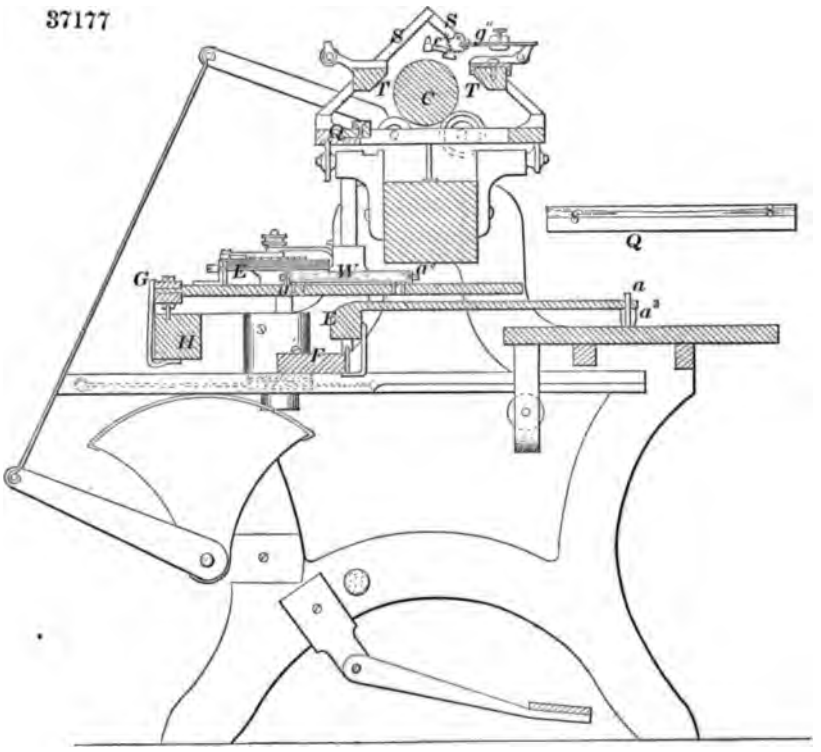

37176

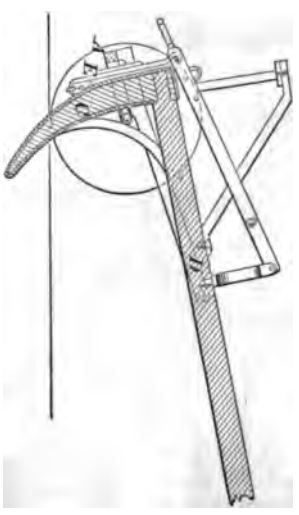

37178

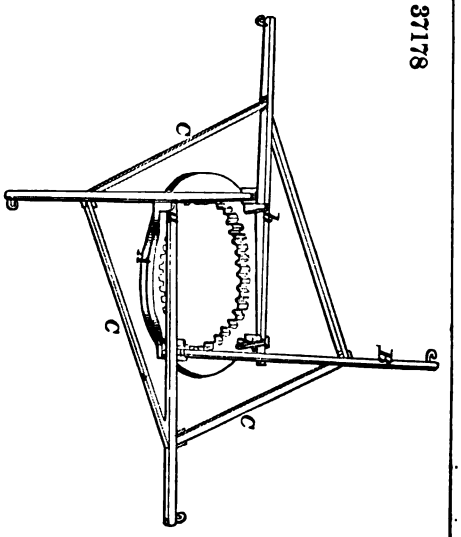

37179

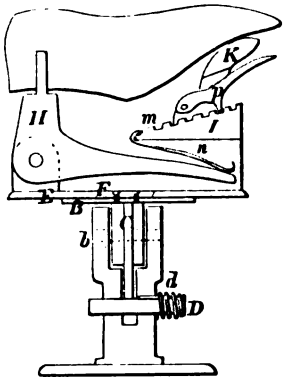

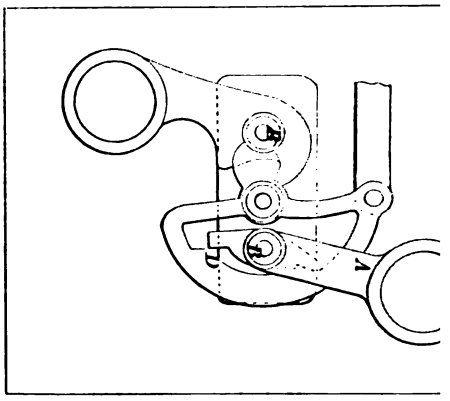

37183

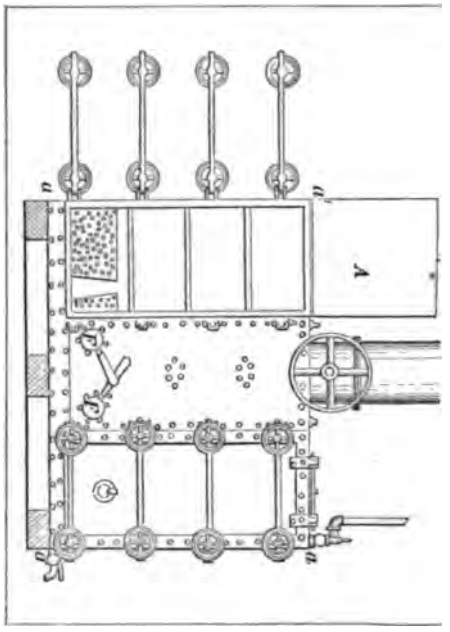

37181

37184

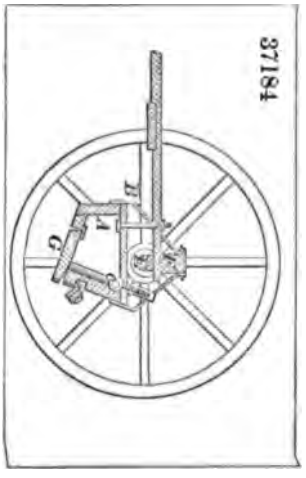

37185

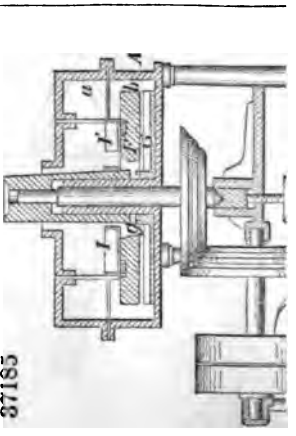

37186

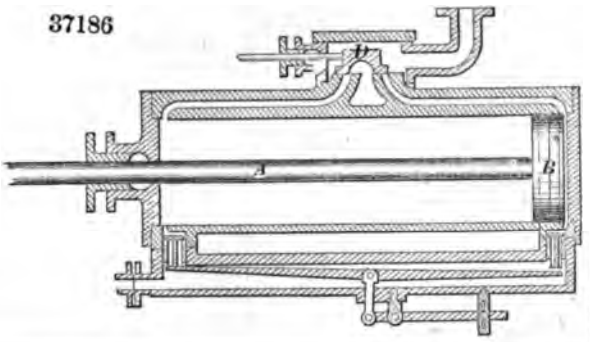

37188

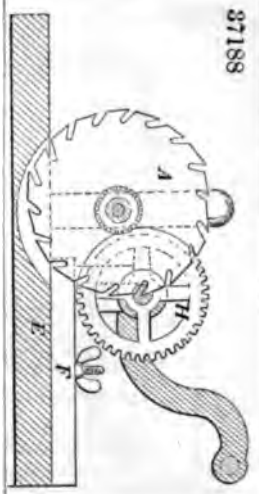

37187

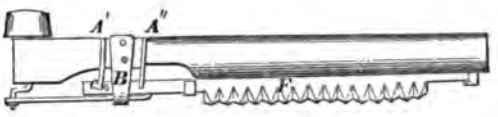

37189

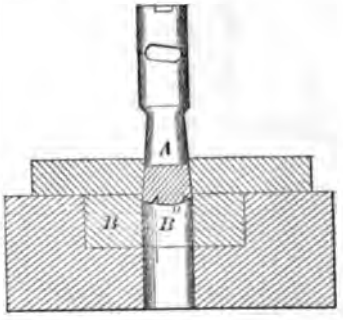

37190

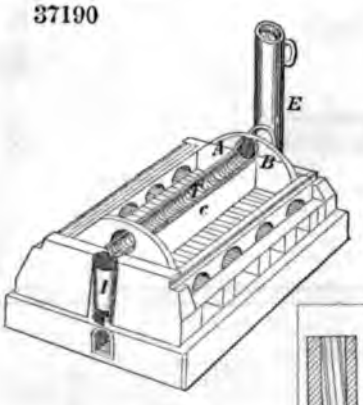

37193

37191

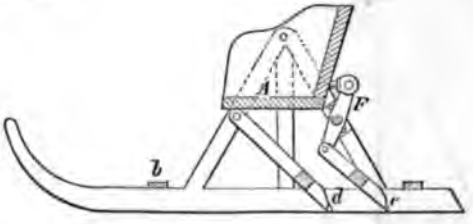

37194

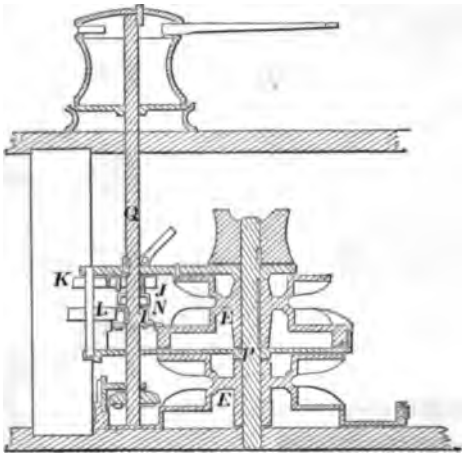

37195

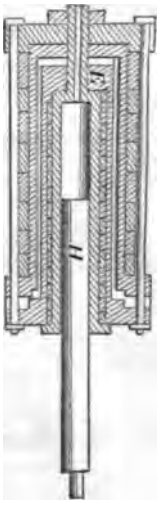

37196

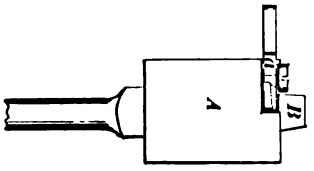

37197

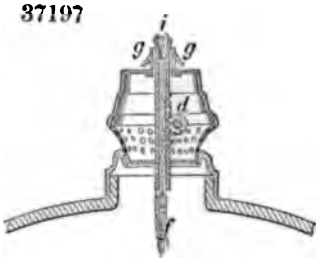

37199

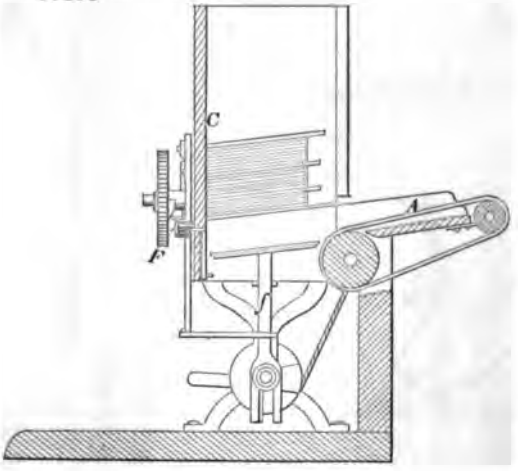

37200

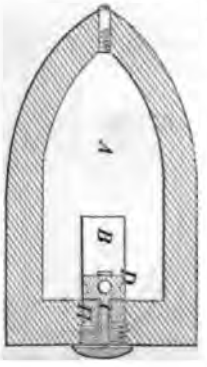

37201

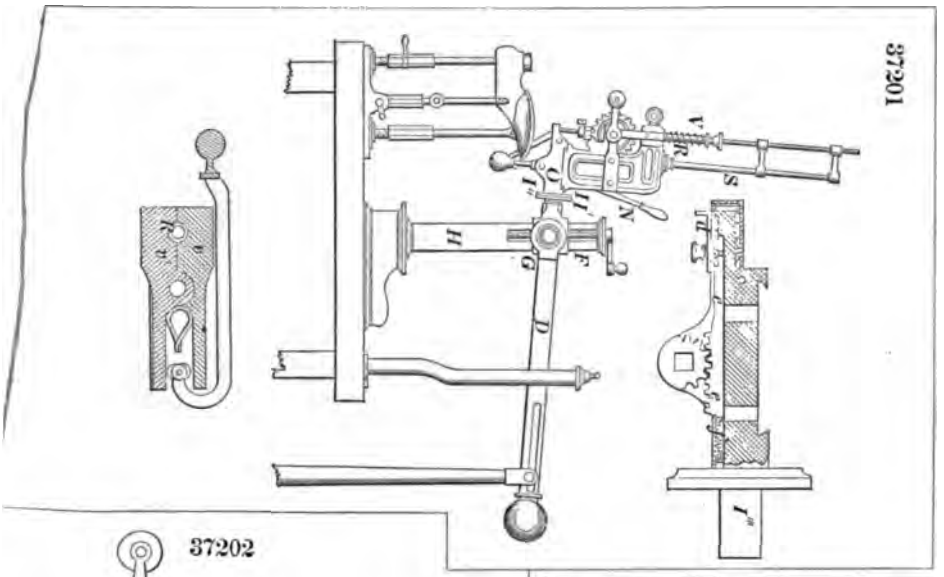

37202

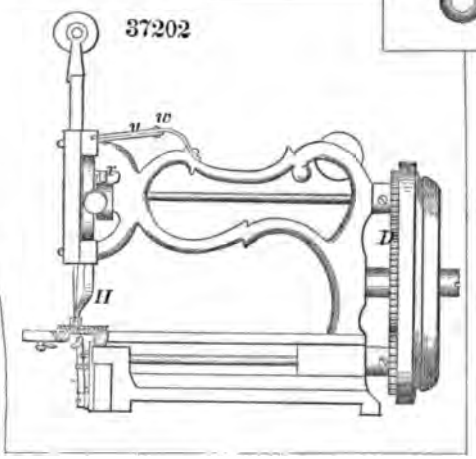

37205

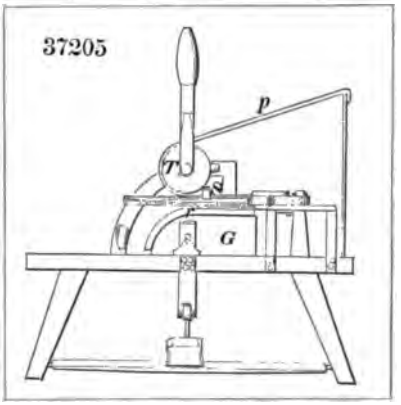

37203

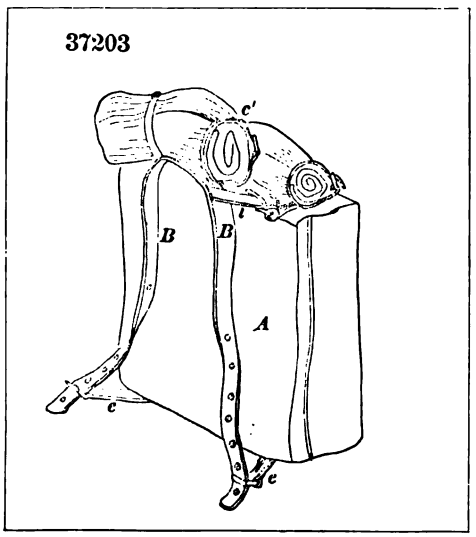

37204

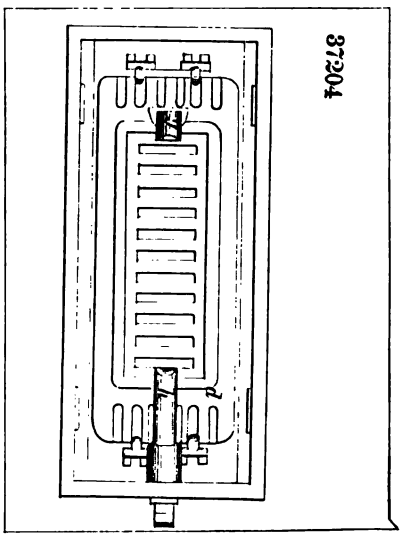

37206

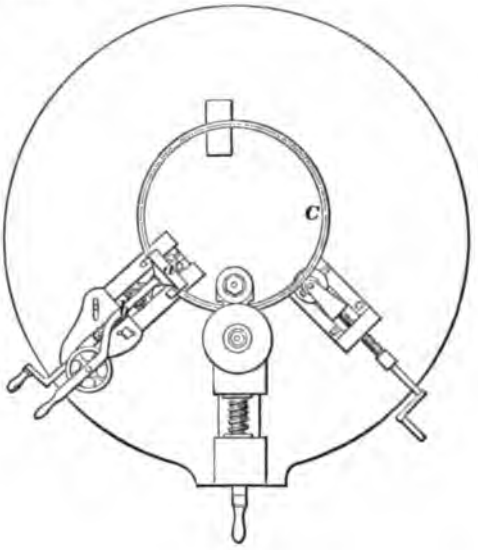

37208

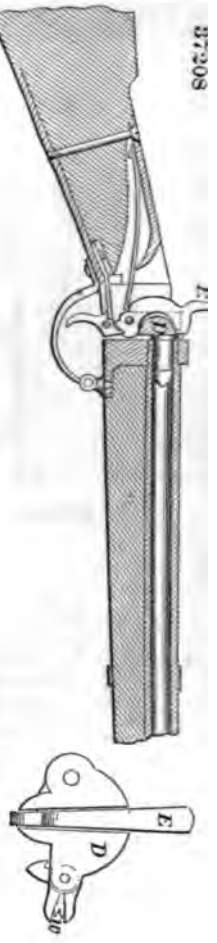

37207

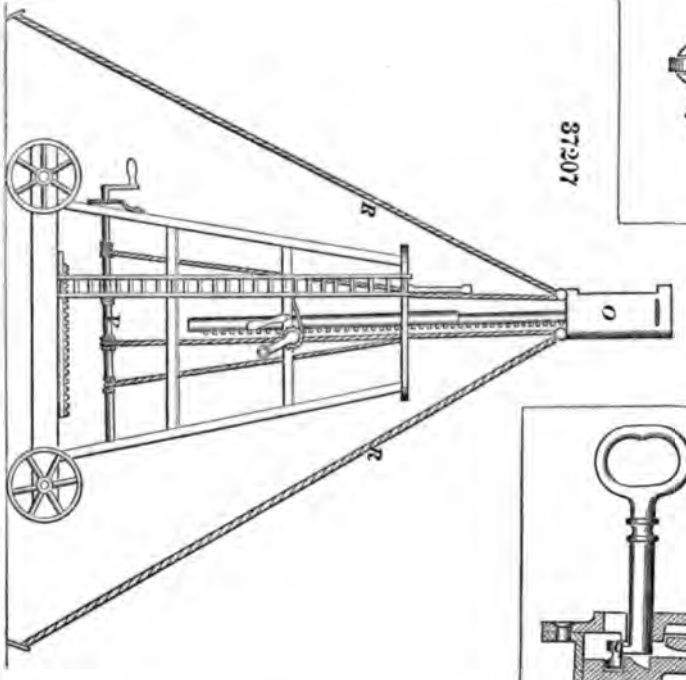

37209

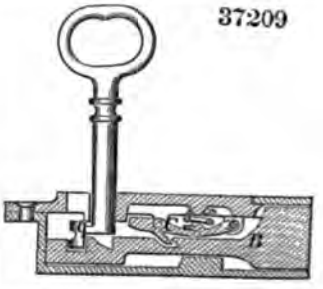

37210

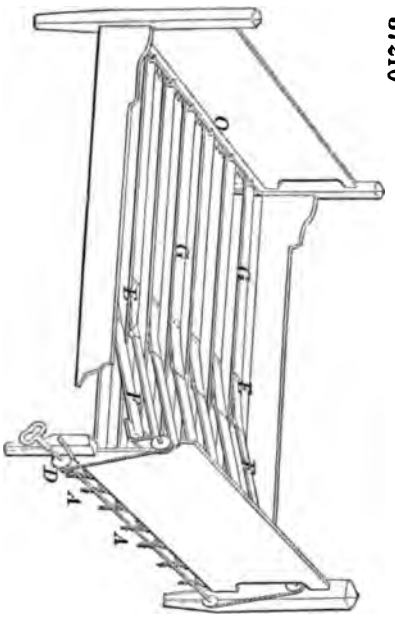

37211

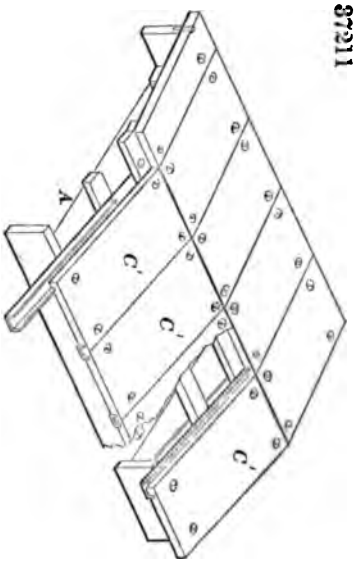

37212

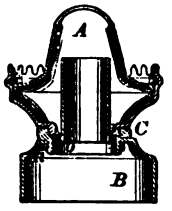

37213

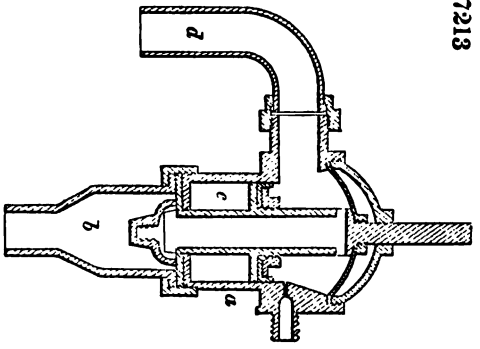

37214

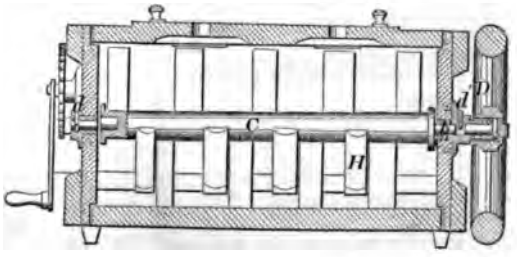

37215

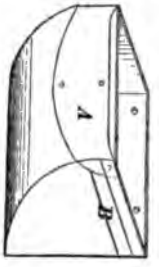

37217

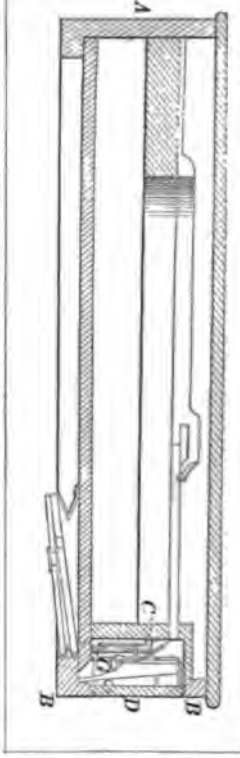

37218

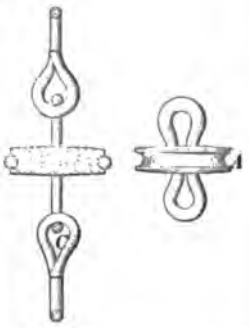

37219

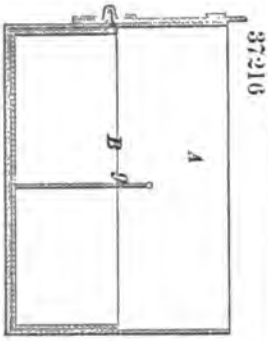

37220

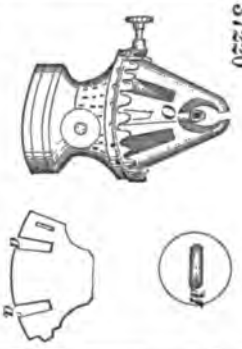

37221

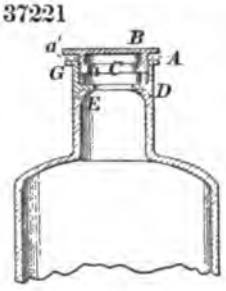

37222

37223

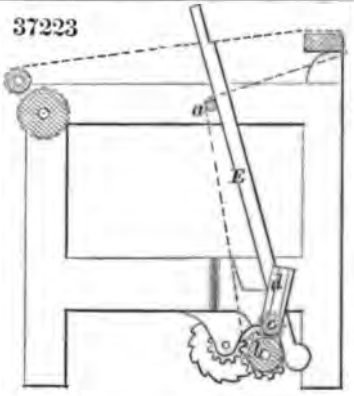

37224

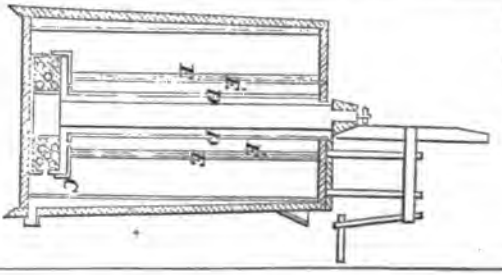

37226

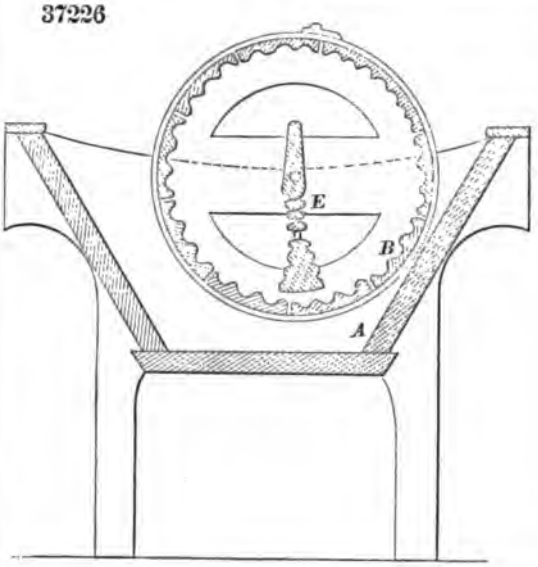

37225

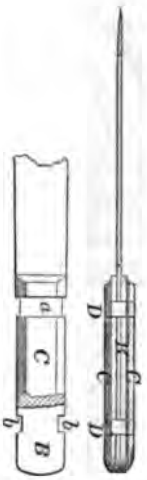

37230

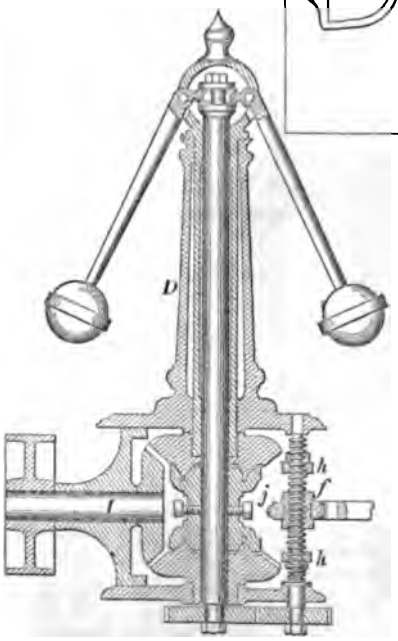

37227

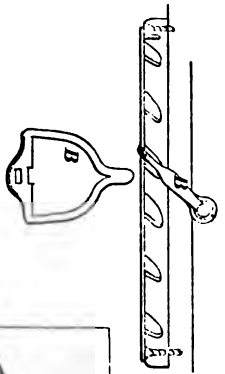

37229

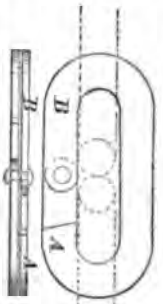

37228

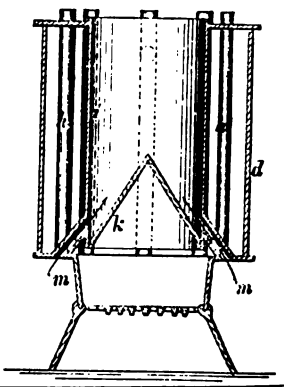

37232

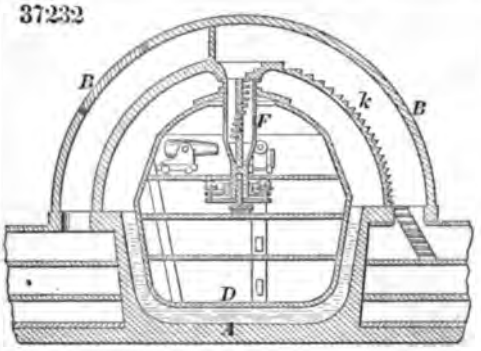

37233

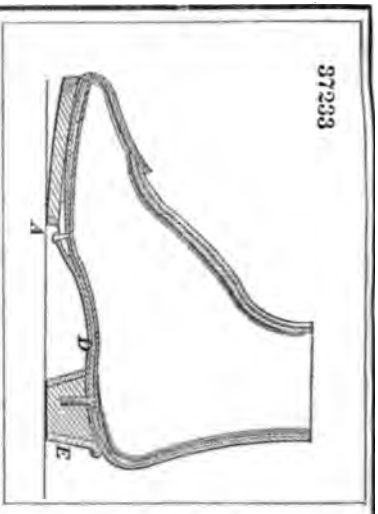

37234

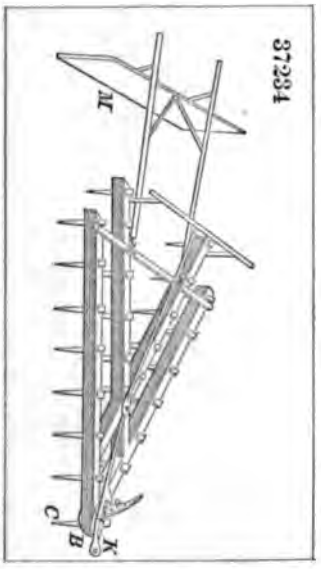

37235

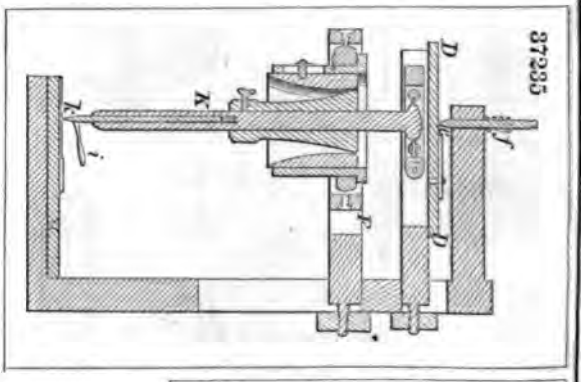

37236

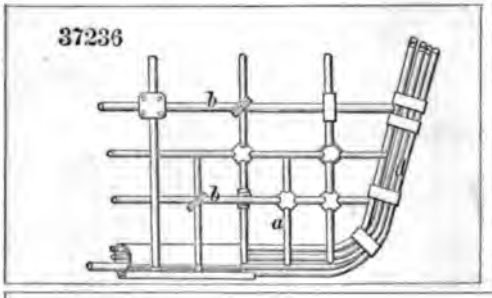

37230

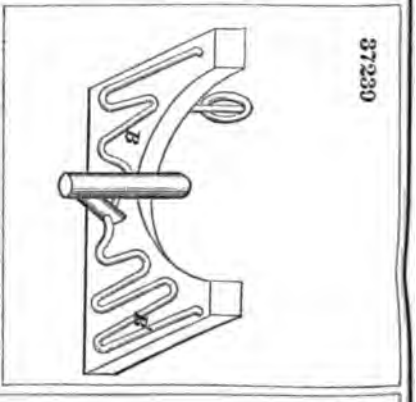

37238

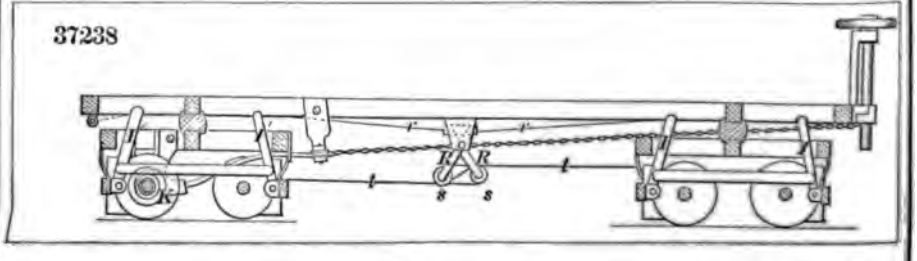

37240

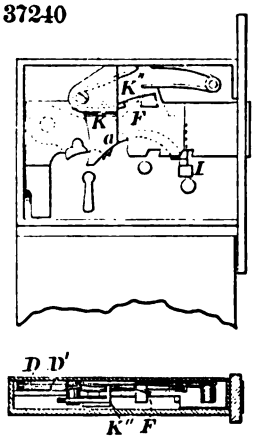

37241

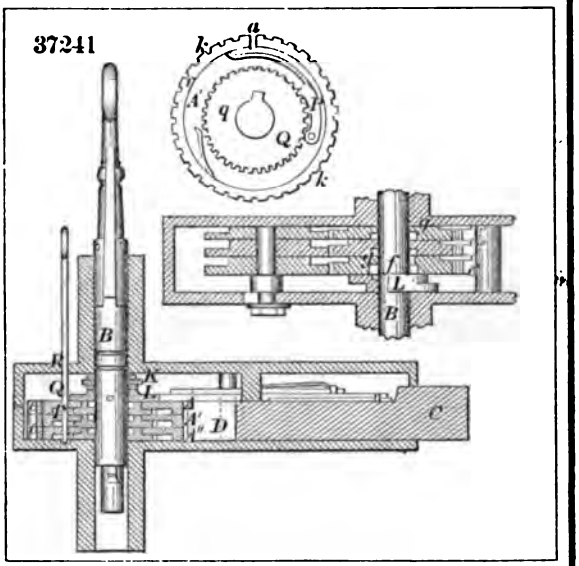

37242

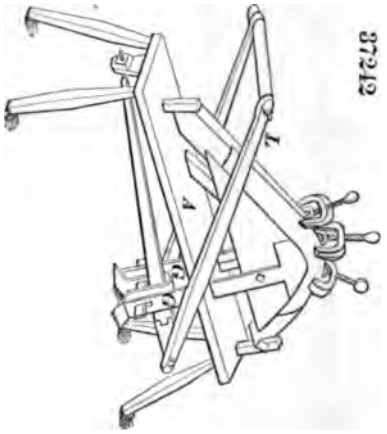

37243

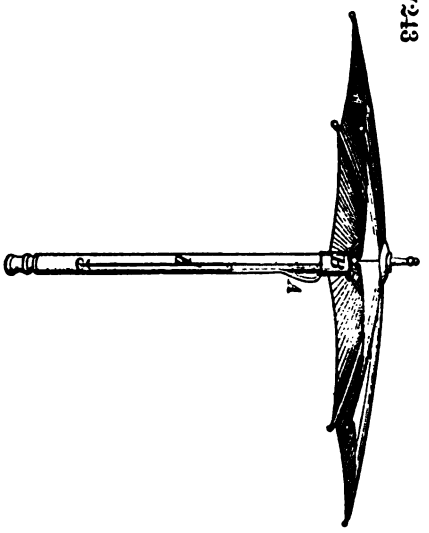

37244

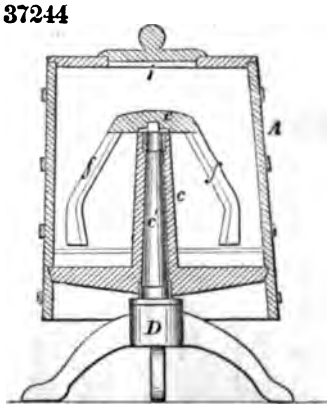

37245

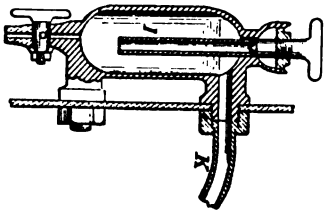

37246

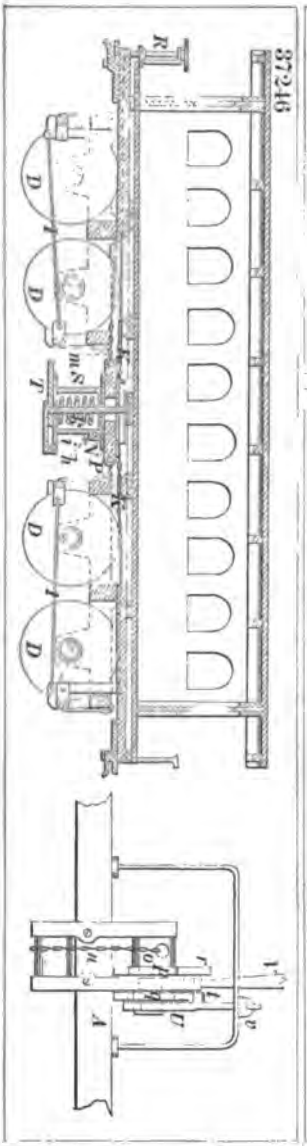

37248

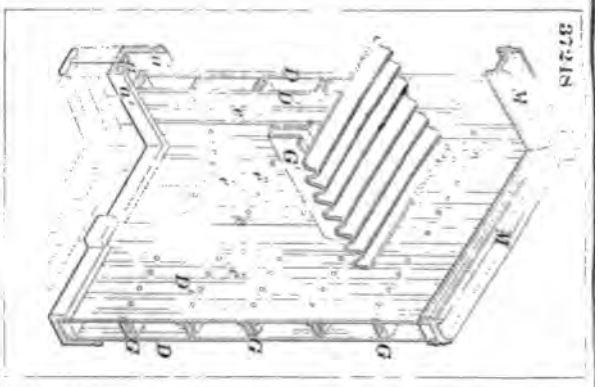

37250

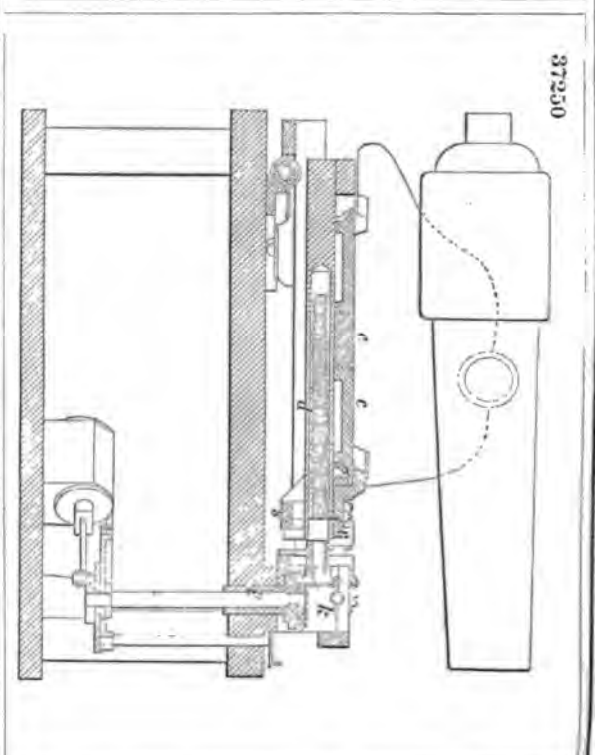

37247

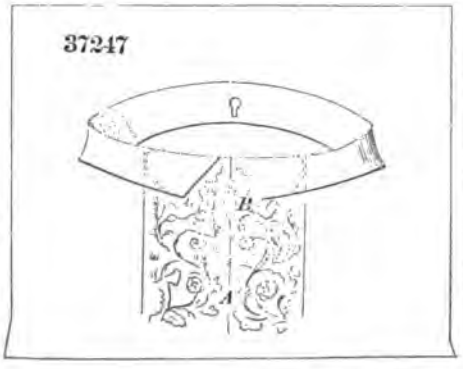

37249

37251

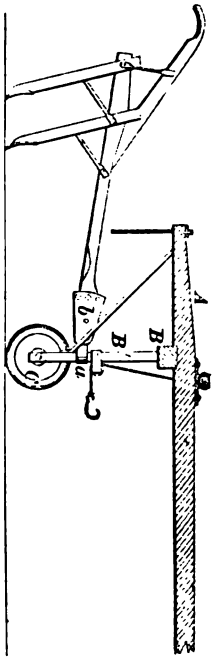

37253

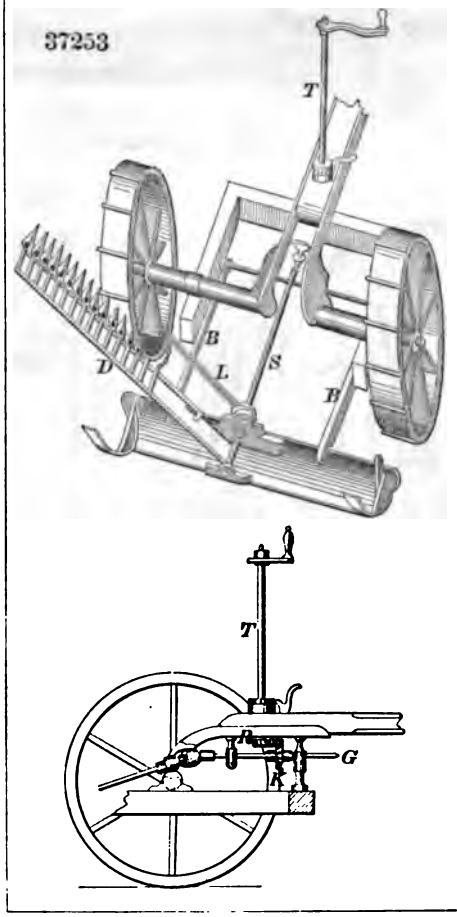

37252

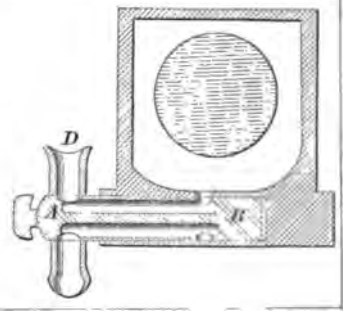

37255

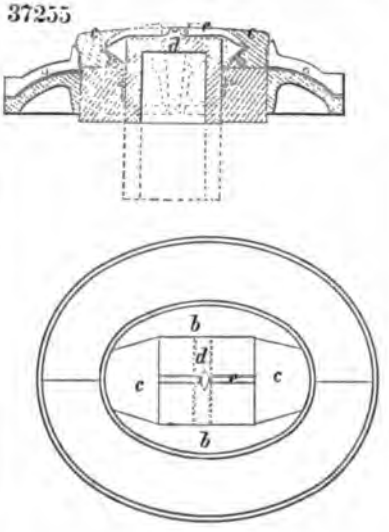

37254

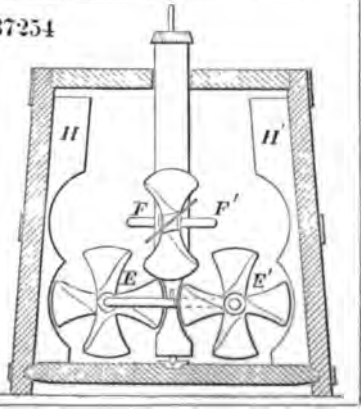

37257

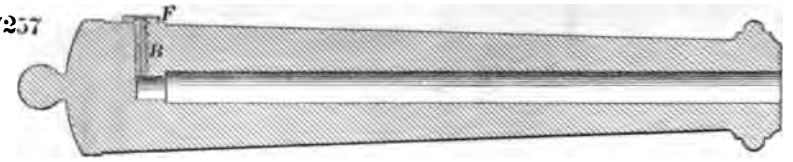

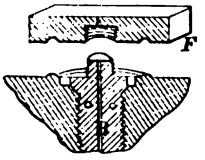

37256

37258

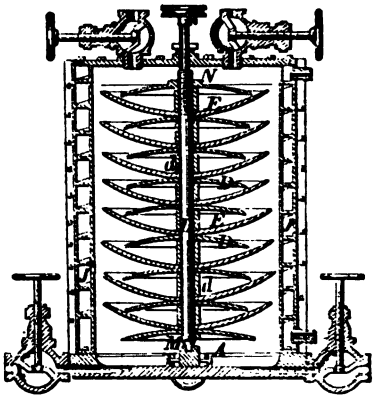

37260

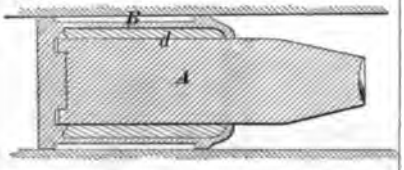

37261

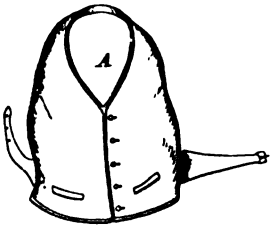

37262

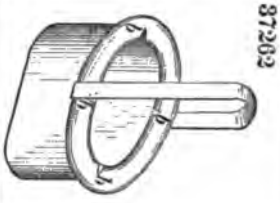

37259

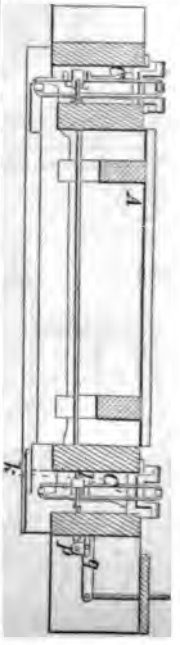
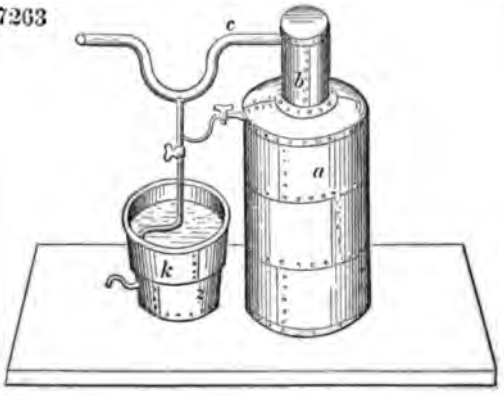
37263